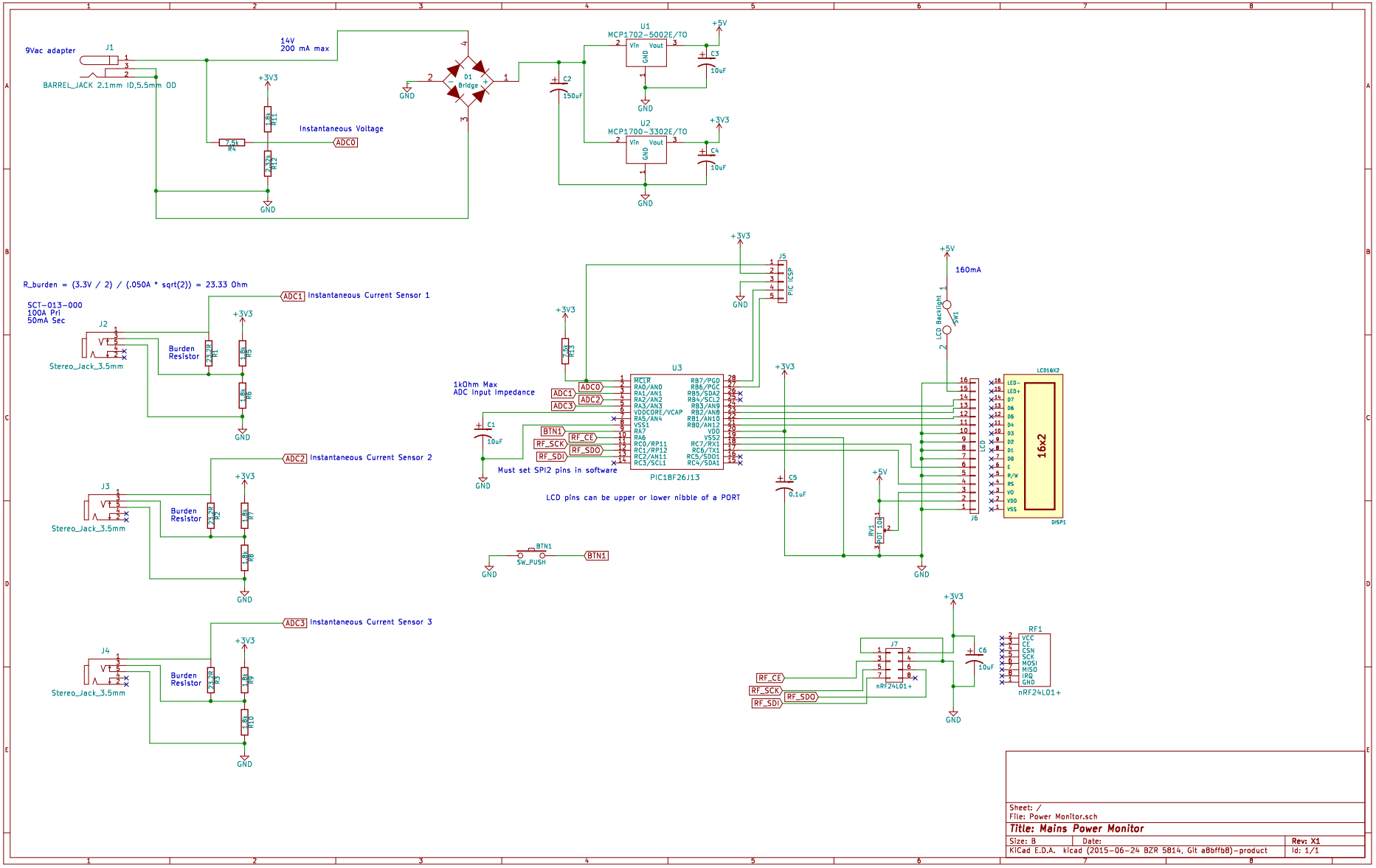

Sheet: /
File: Power Monitor.sch

Title: Mains Power Monitor

Size: B	Date:	Rev: X1
KiCad E.D.A. kicad (2015-06-24 BZR 5814, Git aBbffbB)-product		Id: 1/1