Engineering Design Journal

Embedded Mechatronics Studio
41070 - Autumn 2024

Dylan Purbrick - 24945343

UTS CRICOS 00099F This document was created by Dr Anna Lindqvist with the assistance of ChatGPT and consultation with Beata Francis

Contents

PERSONAL PROFILE **1**

PERSONAL INTRODUCTION 1
MOTIVATION AND GOALS 1

TEAM ROLE & CONTRIBUTION **2**

TEAM ROLE AND WORKLOAD DISTRIBUTION 2
Team Lead *2*
PCB Design Lead *2*
Programming Lead *2*
CAD Assembly Lead *2*
CONTRIBUTION TO THE PROJECT 2
DISCIPLINE LEAD SPECIFIC CONTRIBUTION 3
COMMUNICATION/COLLABORATION TOOLS 3

SYSTEM CONTEXT & DESCRIPTION **4**

SYSTEM BLOCK DIAGRAM 4
PCB 2

SUBCIRCUIT CONTEXT & DESCRIPTION – POWER SUPPLY **3**

Testing & Validation *4*

EMBEDDED SOFTWARE SUBROUTINE – *STEP TRACKING* **5**

..... 6
SUBROUTINE TESTING AND VALIDATION 6

EVALUATION, FEEDBACK & REFLECTION **7**

ACCOMPLISHMENTS AND ACHIEVEMENTS 7
CHALLENGES AND HOW THEY WERE OVERCAME 7
REFLECTION 7

REFERENCES **8**

Personal Profile

Personal Introduction

My name is Dylan Purbrick; as of writing, I am currently in my third year of studying for a Bachelor of Mechatronic Engineering at UTS. Prior to the spring semester of last year, I had little exposure and experience with embedded systems. Over the course of the semester, I was greater exposed to embedded systems, their uses and applications, and this furthered my interest in learning more about robotics and being able to get some hands-on experience through designing and putting together robotic systems.

Motivation and Goals

Embedded Mechatronics Studio (EMS) – subject 41070, has been the first my first experience undergoing the entire design and assembly process of a PCB.

Upon the completion of EMS, the group will have ideally designed and assembled a functional pedometer. Evidence of this will be instrumental in demonstrating my ability to prospective employers. Due to the low stakes of this project, being at that of university level, plenty of support, and guidance is given to help further foster and develop confidence and a range of career applicable skills.

The key goals I set for myself to further myself over the course of EMS were;

- Get comfortable with the Altium365 workflow
- Practice circuitry design and PCB design within Altium
- Further development of soldering ability
- Further development of coding for microcontrollers

I feel I have successfully met these goals over the course of this subject.

Team Role & Contribution

Team role and workload distribution

The workload distribution of this project was split into 4 key sections and each member was assigned both a subcircuit of our custom PCB to design and a sub routine for our embedded system. This was divided equally, and each member agreed on which areas they would oversee.

Team Lead

As team lead it was my role to manage the team and ensure that many of the administrative tasks were completed well and on time. This included the booking of sprint reviews, submission of work, as well as general meetings. Included in my role as team lead was in assisting other team members where they felt they needed help.

PCB Design Lead

The PCB design lead was in charge of ensuring that the design of each members designated subcircuit designs came together and functionally worked as intended. Anika was also in charge of integrating these designs into the top-level schematic and had a role in other minor schematics such as the Arduino interface and user interfacing. As PCB Design lead, the creation of the ECAD for the PCB, as well as ordering the board and components for subsequent assembly was also undertaken.

Programming Lead

The Programming Lead was in charge of delegating subroutines and to ensure integration of these subroutines would function as intended for the embedded system. Brandon took lead on the programming, and as Programming Lead aided where he and team members have felt it required.

CAD Assembly Lead

The CAD Assembly Lead was assigned to Lachlan and was to oversee the CAD design of the encloser. With this, the role has also required him to 3D print and ensure that the final board and microcontroller fit within the enclosure. Also required of him is to design it to be able to be fitted to a person comfortably and that is also able to be fitted to the testing stand easily.

Contribution to the project

My personal contribution to the project includes possessing a basic knowledge of soldering and offering guidance to other group members when I haven't been present to solder the PCB. Completion of Step Identification subroutine and assisted with the completion of the group contract. Greatly contributed to each sprint review. Additionally, towards the completion of the project, I focused on formatting the data sheet to ensure team members could easily add information from their respective sections. I aimed to make the information on the datasheet comprehensible for those not familiar with the project. Ensuring information was accurate and quick and effective operation of the device.

Discipline Lead specific contribution

Fulfilling my role as team lead, I ensured the team met deadlines agreed upon and those set forth by tutors and design review requirements. I fostered an environment where team members felt comfortable asking for help when needed and addressing any issues openly and respectfully within the group. It was important to me to set a precedent for open communication and collaboration, facilitating the success of the project.

Communication/Collaboration tools

In addition to communication over teams we utilized the time during the tutorials on Monday and lab time on Wednesday to keep the team updated on progress and goals for the week throughout each sprint. Trello was our main form of keeping track of deadlines and teams was the main way the team kept in contact. To complete our individual subcircuits Altium designer was used and shared over Altium 365, and for our individual subroutines GitHub was used to facilitate the sharing of code.

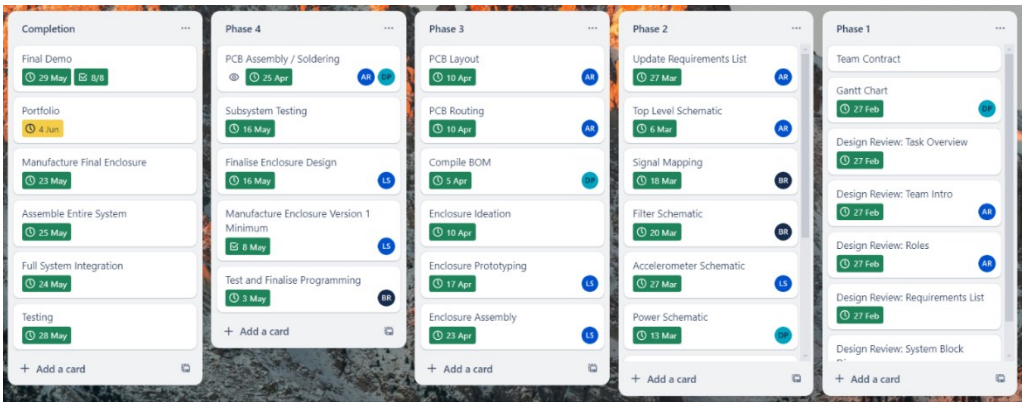

Figure 1.1 – Trello board as of completion of the Project

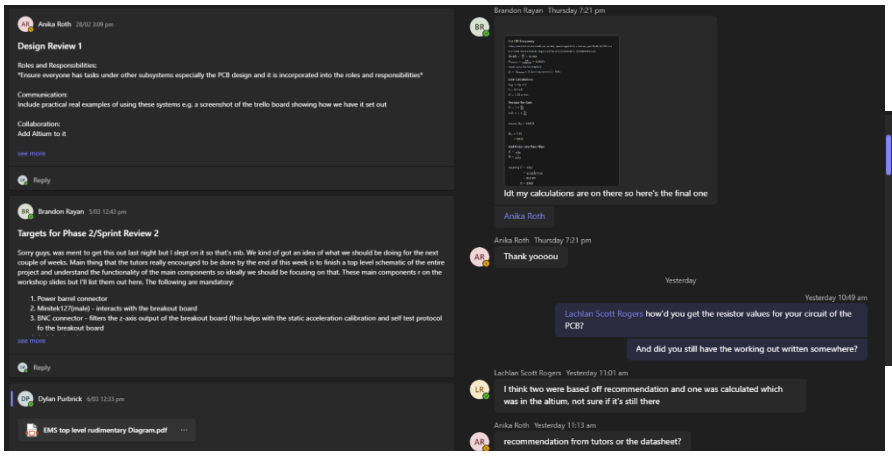

Figure 1.2 - Collaboration & Communication over Teams

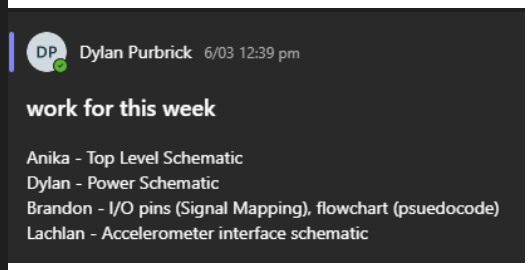

Figure 1.3 – Delegating of tasks over teams

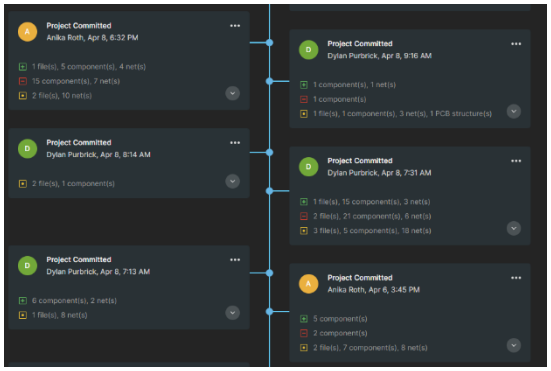

Figure 1.4 – Altium 365 Project commits

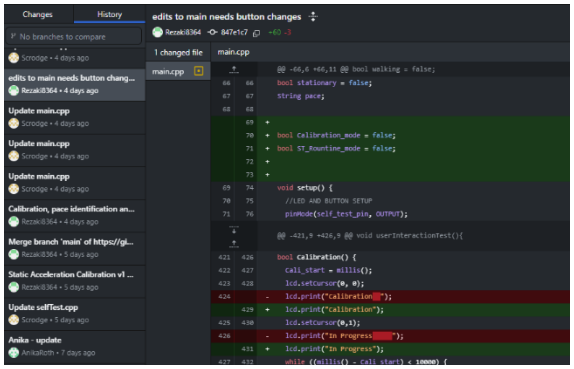

Figure 1.5 - Group GitHub Repository

System Context & Description

The system is designed to monitor steps and to do so other functions have been included to help facilitate an intuitive user experience. The design features 3 buttons on the face of the device to allow the user to interact and perform specific functions such as a Self-test of the ADXL335 unit, a static calibration of the device, and the resetting of the tracked steps. Also included in our design is a 2x16 LCD screen which displays the step count and the result of the Self-test and Calibration. The face of the device also features 3 LEDs which indicate the pace of the user and device. As can be seen below these were the requirements we came to as a group to design our system to.

Programming		PCB		Enclosure	
Requirement	*Value*	*Requirement*	*Value*	*Requirement*	*Value*
Min Walking Pace	>0m/s	Max Size	102.9 x 80.1 mm	Peripherals should be clearly visible through enclosure	
Max Walking Pace	10m/s	Min No. Test Points	10	Max Size	150mm x 150mm x 150mm
LCD should convey step count		Min Power Output of PCB	+3.3V	Max Weight	50g
Program should be written in the Arduino Programming Language		Should physically connect to pins on the Arduino Uno R3		Should be able to mount to the human body (shoulder/wrist) and experimental interface	
Walking Pace Tolerance	0.05m/s	LCD and LEDs should convey meaningful outputs to the User			
X-Axis Output at 3V	+1.08g	Users should be able to interact with the System			
Y-Axis Output at 3V	+1.08g				
Z-Axis Output at 3V	+1.83g				

System Block Diagram

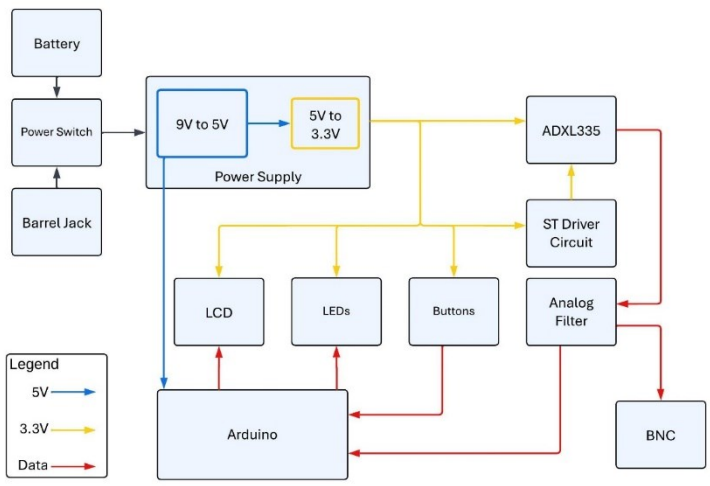

Figure 2.1 – General System Block Diagram

The system block diagram outlines the power and data transfer of the entire system. This was based off the initial block diagram done by Lachlan during sprint 2 and refined during sprint 4.

PCB

As I had the most experience out of all the members of the team, I did most of the soldering. Given we had to desolder many of our components from V1 of our PCB due to errors with our filter schematic the team, including myself, were given a good opportunity to get more experience soldering and desoldering.

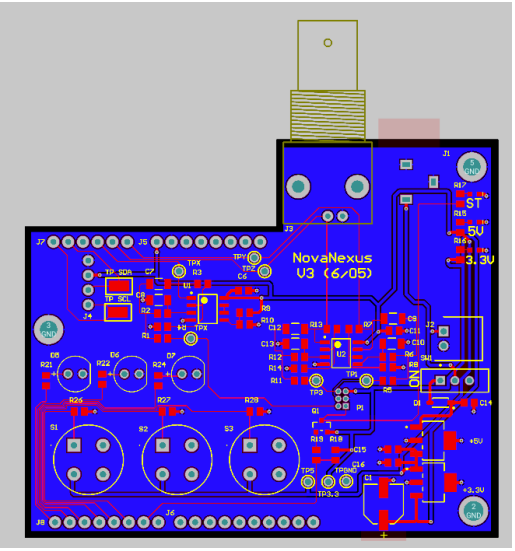

Figure 2.2 – 2D view of ECAD for Final PCB

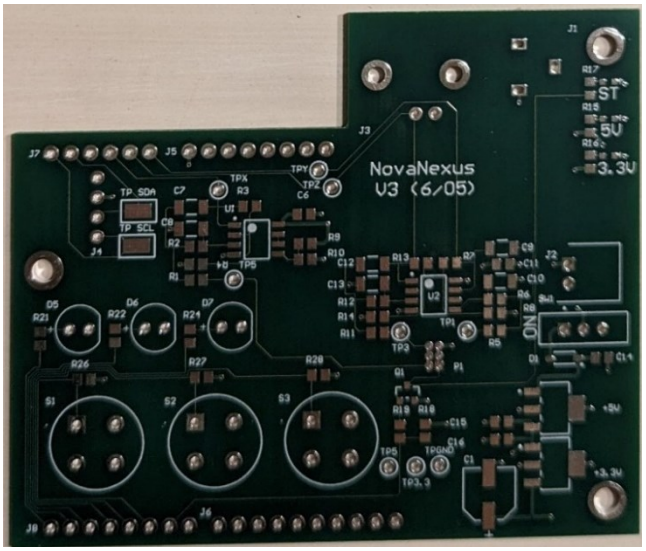

Figure 2.3 – Blank Final PCB Print

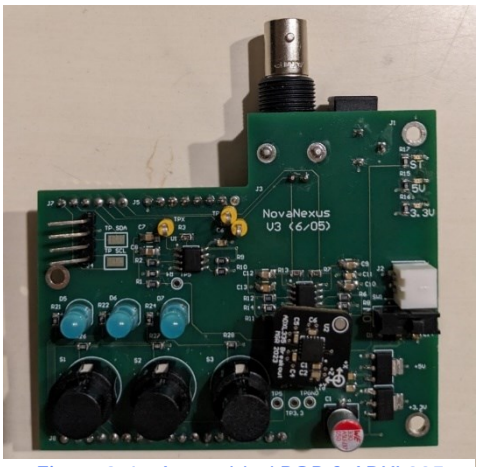

Figure 2.4 – Assembled PCB & ADXL335

Subcircuit Context & Description – Power Supply

The power supply is to distribute power throughout the entire PCB and as such must be able to supply a constant and stable supply voltage when the device is powered on. The circuit is designed to take in a voltage of 9V (with a maximum of 25V) and step it down initially to 5V to be distributed to the required components and then from the 5V LDO regulator it then feeds into a 3.3V LDO regulator and again distributes to the required components of the PCB. Located within the power circuit is a set of test points and to indicate if there is a 5V source and/or 3.3V source there a two individual LEDs to indicate this.

Subcircuit Schematic

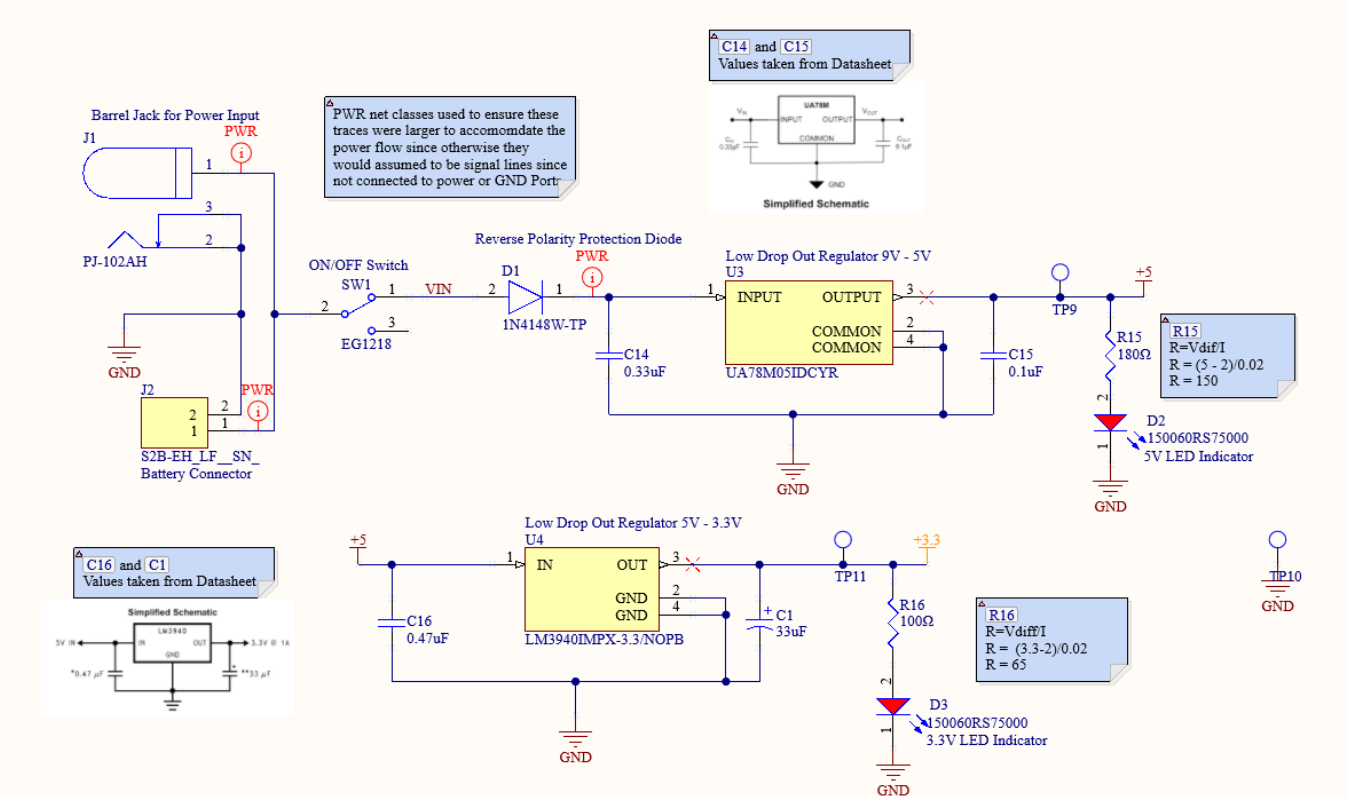

Figure 2.5 – Final Power Supply Schematic taken from Altium 365

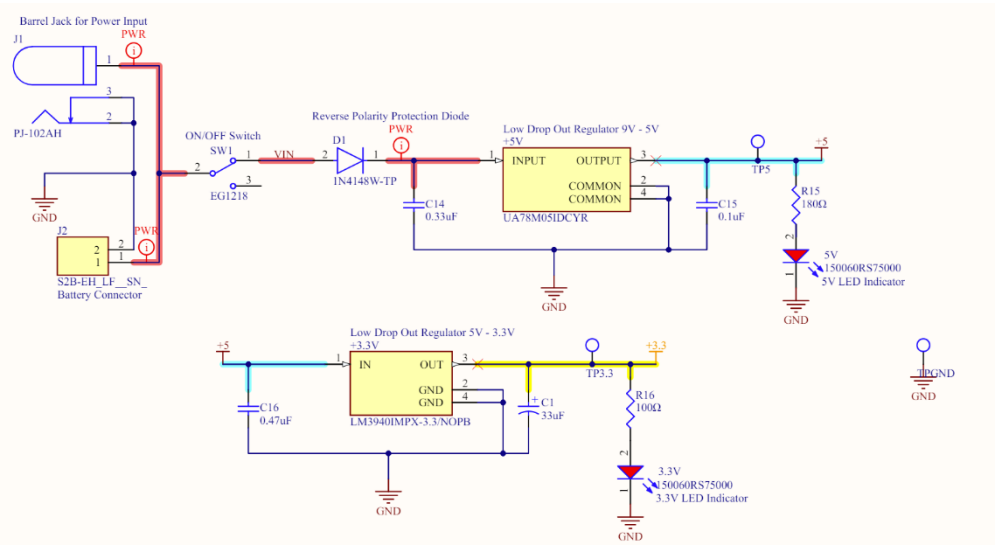

Figure 2.6 – Power Supply Schematic Net Colour Highlights

The areas outlined in pink in the image to the right (figure 2.7) show the placement of the components and layout of the circuit.

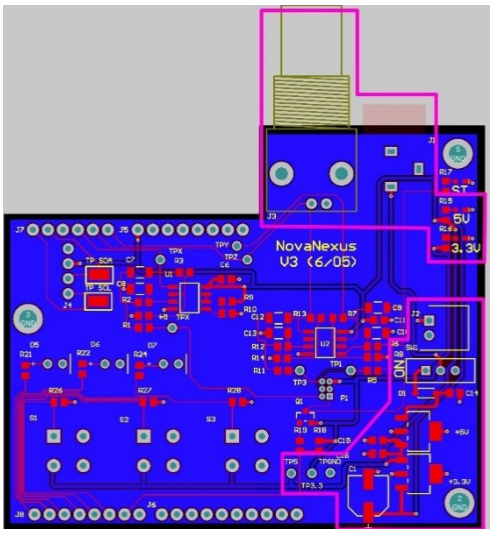

Figure 2.7 – Power Supply Section Outlined

Figure 2.8 shows the PCB with the power rails highlighted. The Red highlight runs from the external power through the diode and then the switch to the 5V LDO regulator. The light blue highlighted path indicates the 5V power path and the yellow path indicates the transfer of 3.3V power.

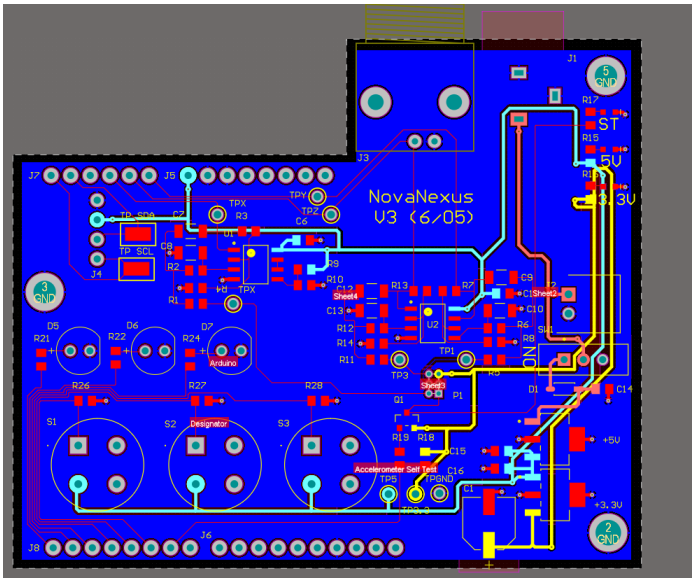

Figure 2.8 – PCB with net colour highlights

Testing & Validation

The power supply went through multiple iterations before the PCB was printed and populated. The main editions made to the design was the inclusion of a diode to provide reverse polarity protection having not been present on the first version of the design.

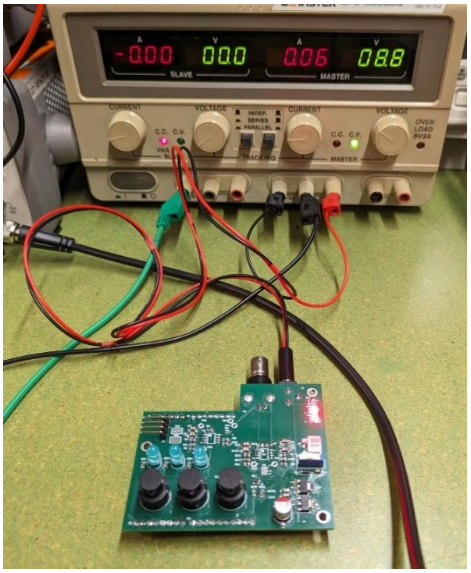
Figure 2.9 – Power Supply Validation w/ Alternate switch

Having put the power supply together without populating the rest of the board I was able to test and validate that the design put forth worked as intended. This was made easy due to the LEDs located on the top right of the PCB and through use of the power supplies in the lab. An issue we did have that we firstly believed to be with the power supply was a current limiting issue. Through the testing of continuity and having previously tested the power supply in isolation it was found to be a design fault within the filter.
While soldering elements of the power supply multiple switches were melted and became inoperable.

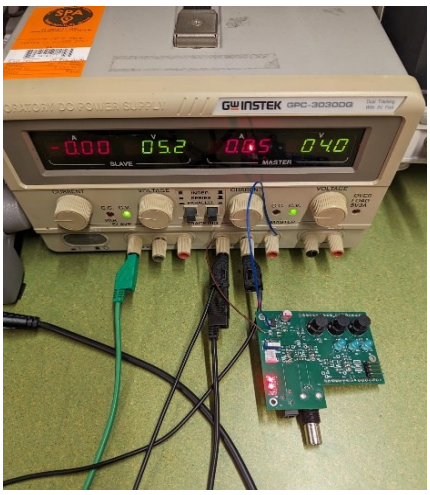
Figure 2.10 – Current issue Troubleshooting

Embedded Software Subroutine – *Step Tracking*

The step tracking subroutine is constantly running as its main purpose it to ensure the pedometer functions as intended which is to be able to identify when a step is taken and secondarily of this, to count the number of steps taken by the user while it is turned on and push this count to the implemented LCD screen. The Walking Pace Identification subroutine depends on the step tracking to perform its intended purpose of identifying and displaying the pace of the user by way of the LEDs on the face of the case distinguishing it the device and user is stationary, at a walking or running pace. The code must also allow the user interactions the ability to interrupt the step count and reset it to zero when pressed.

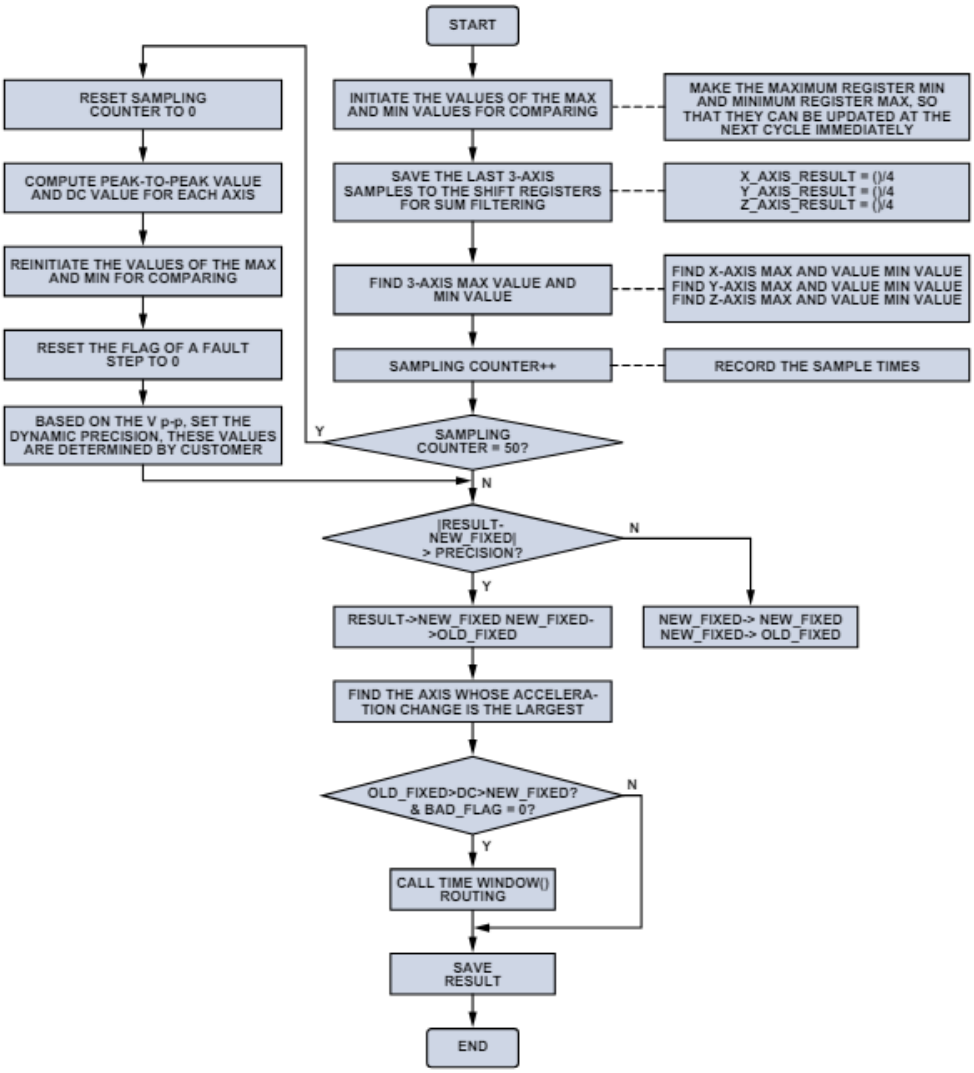

Zhao, N. (2010). From Analogue Dialogue 44-06, pg 3, Figure 7 Steps parameter Algorithm flowchart

The pseudocode quickly evolved from that of pseudocode (figure 3.2) to functional code. Due to Anika working on the pace identification we often worked together over the course of this project non more closely than during the development of our subroutines using each other to bounce ideas and talk out our problems faced while writing the code.

```
initialize accelerometer

func detectStep
  loop:
    read accelermoter data
    calulate total acceleration vector magnitude
    if acceleration mag > threshold
      step detected
      increment step count
      print to lcd
```

Figure 3.2 – Pseudocode for Step Tracking

```
float sample(){
  float total = 0;

  float xval = float(analogRead(filteredX));
  delay(1);
  // Serial.print("X is ");
  // Serial.print(xval);
  float yval = float(analogRead(filteredY));
  delay(1);
  // Serial.print("Y is ");
  // Serial.print(yval);
  float zval = float(analogRead(filteredZ));
  delay(1);
  // Serial.print("Z is ");
  // Serial.print(zval);


  total = sqrt(pow(xval, 2) + pow(yval, 2) + pow (zval, 2));
  // Serial.print("Total is ");
  // Serial.println(total);

  return total;
}
```

Figure 3.2 – Code defining sample

```
float avgSample() {
  // resetting the values needed to calculate the steps
  float total = 0;

  float xunfilt[sampleSize];
  float xavg = 0;

  float yunfilt[sampleSize];
  float yavg = 0;

  float zunfilt[sampleSize];
  float zavg = 0;

  for (int i=0; i<sampleSize; i++){
    // finding the value based on a few samples to make it more accurate
    xunfilt[i] = float(analogRead(filteredX));
    xavg += xunfilt[i];
    delay(1);
    // delay so that they don't overlap

    yunfilt[i] = float(analogRead(filteredY));
    yavg += yunfilt[i];
    delay(1);

    zunfilt[i] = float(analogRead(filteredZ));
    zavg += zunfilt[i];
    delay(1);
  }

  // finalising the averages to be used in calculation
  xavg = xavg/sampleSize;
  // Serial.print("X average is ");
  // Serial.print(xavg);
  yavg = yavg/sampleSize;
  // Serial.print(" Y average is ");
  // Serial.print(yavg);
  zavg = zavg/(2 * sampleSize);
  // Serial.print(" Z average is ");
  // Serial.println(zavg);


  // finding the 3D acceleration vector using the vector components of X, Y and Z
  total = sqrt(pow(xavg, 2) + pow(yavg, 2) + pow(zavg, 2));
  // Serial.print("Total is ");
  // Serial.println(total);

  return total;
}
```

Figure 3.3 – Code defining avgSample

```
void step_identification() {
  // Creating a new sample
  sample2 = avgSample();

  if(sample1 < sample2 && decreaseFlag) {
    decreaseFlag = false;
    // beginning of a new step cycle so reset the flag for if this step has been
    flag = false;
    min = sample1;
    // Serial.println("Minimum Found");
  }
  else if(sample1 > sample2 && !decreaseFlag){
    decreaseFlag = true;
    max = sample1;
    // Serial.println("Maximum Found");
  }

  if(decreaseFlag && (max - min) >= 8) {
    threshhold = ((min + max) / 2);
    // Serial.print("Min is ");
    // Serial.println(min);
    // Serial.print("Max is ");
    // Serial.println(max);
    // Serial.print("Threshold is ");
    // Serial.println(threshhold);

    if((sample1 > threshhold) && (sample2 < threshhold) && !flag && (millis() - stepTime > 250)) {
      stepLength = millis() - stepTime;
      stepTime = millis();
      flag = true;
      step_counter++;
      digitalWrite(running_LED, HIGH);
      digitalWrite(walking_LED, HIGH);
      digitalWrite(stationary_LED, HIGH);
    }
  }

  sample1 = sample2; // storing it as the previous sample to be used for the next comparison
```

Figure 3.4 – step_Identification subroutine

Subroutine testing and validation

Using Phyphox we were able to establish the expected pattern and values for identifying a step, also further reading from a paper from Neil Zhao on 3-Axis Digital Accelerometers (June, 2010) was able to guide in the design the system and in particular the step tracking subroutine. The main way in which testing of the subroutine took place was through physically testing the device. This meant wearing the device and walking it while counting the steps taken separate from the pedometer. While testing the code through physically walking the device attached to the arm or wrist of a group member it was initially dropping every second step. The solution that was found was to adjust the sample size as well as adjusting the threshold value.

Figure 3.5 – Step tracking Testing wrist

Evaluation, Feedback & Reflection

Accomplishments and Achievements

Over the course of the project further understanding and experience in the design process of embedded systems and the intricacies involved.
Development of my soldering and coding ability.

Challenges and how they were Overcame

As per usual the challenges of group work occurred and all that entails, including conflicting schedules and availabilities. Effective communication and an outlining of expectations surrounding that of availability and expectation of quality and timeliness of work amongst the group took place. As we became better acquainted with each other we were better able to set out good lines of communication to keep everyone updated with what still needed to be done from day to day, and more comfortable reaching out for assistance.

There was an oversight with the pin allocation of the accelerometer and as such we had several of the pins flipped from where they actually were on the ADXL335 accelerometer supplied to us. How we rectified this was through the redesign and ordering of our PCB. We did initially think to scratch and rewire the pins on our PCB to match the accelerometer and be able to test but due to having time available to us we thought it better to reorder with the redesign implemented.

While soldering there were a few errors that occurred including the burning of switches as well as the loss of components due to the small size, through being more attentive and taking more frequent breaks when soldering I was better able to hold concentration and better complete this part of the project.

As experienced on demonstration day we encountered an issue with the amount of noise our pedometer was receiving, this was due to the impedance of the test bench setup and through talking with Michael and the rest of the tutors it was found to rectify this issue the implementation of a drop down resistor in the filter schematic

Reflection

This project was a welcome challenge and through its completion I now have knowledge of using Altium and its workflow as well as the design process of a custom PCB and all that entails. The expectations of the project and the marking of such was well set out and clear to follow, laying the ground work for a well guided and focused path to completion. The feedback provided back to us guided us to better plan out our design sprint reviews and ultimately pushed and guided myself personally and the group to achieve a higher mark. Much of the feedback was in relation to the clarity of the presentations and as such we modified and made the slides more readable as we progressed toward our final presentation and submission.

References

Zhao, N. (June, 2010). Full-Featured Pedometer Realized with 3-Axis Digital Accelerometer. Analogue Dialogue, Volume 44. https://www.analog.com/media/en/analog-dialogue/volume-44/number-2/articles/pedometer-design-3-axis-digital-acceler.pdf