计算机系统结构

第五讲：流水线动态调度

张广艳

清华大学计算机系

gyzh@tsinghua.edu.cn

主要内容

- **相关基本概念**
  - 指令级并行的概念
  - 动态调度的基本思想
- 集中式动态调度技术：记分牌算法
- 分布式动态调度技术：Tomasulo算法

指令级并行

- 指令级并行：指指令之间存在的一种并行性，利用它，计算机可以并行执行两条或两条以上的指令。

  （ILP：Instruction-Level Parallelism）

- 开发ILP的途径有两种
  - 资源重复，重复设置多个处理部件，让它们同时执行相邻或相近的多条指令；
  - 采用流水线技术，使指令重叠并行执行。
- 理想流水线的CPI加上各类停顿的时钟周期数：

$$CPI_{流水线} = CPI_{理想} + 停顿_{结构冲突} + 停顿_{数据冲突} + 停顿_{控制冲突}$$

- 理想CPI是衡量流水线最高性能的一个指标

指令级并行

1. 开发ILP的方法可以分为两大类

- 静态调度
  - 依靠编译器对代码进行静态调度，以减少相关和冲突。
  - 它不是在程序执行的过程中、而是在编译期间进行代码调度和优化。
  - 通过把相关的指令拉开距离来减少可能产生的停顿。
- 动态调度
  - 在程序的执行过程中，依靠专门硬件对代码进行调度，减少数据相关导致的停顿。

指令的动态调度

- 动态调度的优点：
  - 能够处理一些在编译时情况不明的相关（比如涉及到存储器访问的相关），并简化了编译器；
  - 能够使本来是面向某一流水线优化编译的代码在其它的流水线（动态调度）上也能高效地执行。
- 以硬件复杂性的显著增加为代价
- 本讲介绍：如何利用各种硬件技术来开发更多的指令级并行

动态调度的基本思想

1. 到目前为止我们所使用流水线的最大的局限性:
   - 指令是按序流出和按序执行的
   - 考虑下面一段代码:

```
DIV.D     F4，F0，F2
ADD.D     F10，F4，F6
SUB.D     F12，F6，F14
```

ADD.D指令与DIV.D指令关于F4相关，导致流水线停顿。

SUB.D指令与流水线中的任何指令都没有关系，但也因此受阻。

动态调度的基本思想

在前面的基本流水线中：

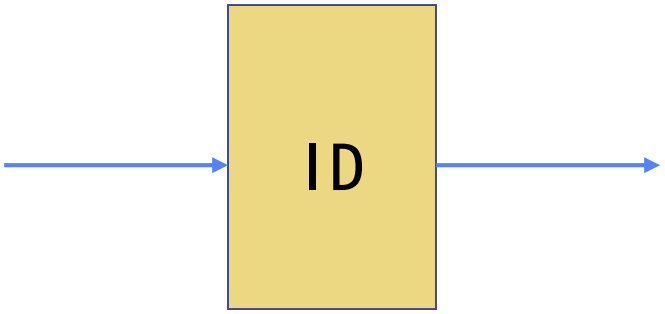

检测结构冲突

检测数据冲突

一旦一条指令受阻，其后的指令都将停顿。

动态调度的基本思想

- 为了使上述指令序列中的SUB.D指令能继续执行下去，必须把指令流出的工作拆分为两步：
  - 检测结构冲突
  - 等待数据冲突消失

  只要检测到没有结构冲突，就可以让指令流出。并且流出后的指令一旦其操作数就绪就可以立即执行。

2. 乱序执行

- 指令的执行顺序与程序顺序不相同
- 指令的完成也是乱序完成的
  - 即指令的完成顺序与程序顺序不相同。

动态调度的基本思想

3. 为了支持乱序执行，我们将5段流水线的译码阶段再分为两个阶段：
   - 流出（Issue，IS）：指令译码，检查是否存在结构冲突。 （in-order issue）
   - 读操作数（Read Operands，RO）：等待数据冲突消失，然后读操作数。

     （out of order execution）

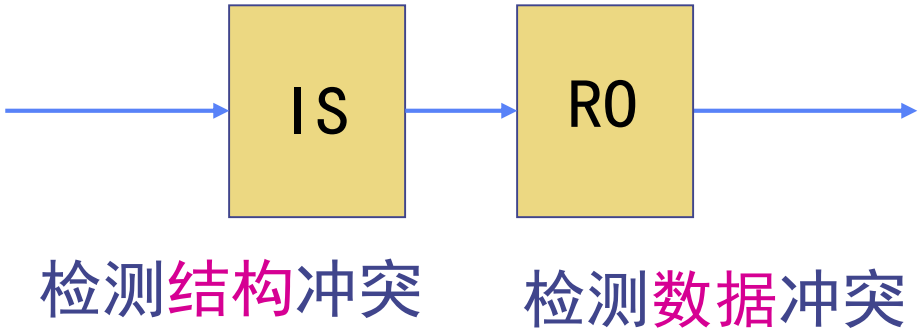

动态调度的基本思想

4. 在前述5段流水线中，是不会发生WAR冲突和WAW冲突的。但乱序执行就使得它们可能发生了。
   - 例如，考虑下面的代码

```
DIV.D   F10, F0, F2
ADD.D   F10, F4, F6
SUB.D   F6, F8, F14
```

存在输出相关

存在反相关

可以通过使用寄存器重命名来消除。

动态调度的基本思想

5. 动态调度的流水线支持多条指令同时处于执行当中。
   - 要求：具有多个功能部件、或者功能部件流水化、或者兼而有之。
   - 我们假设具有多个功能部件。
6. 指令乱序完成带来的最大问题:

   异常处理比较复杂

   （精确异常处理、不精确异常处理）

动态调度的基本思想

- 精确异常：如果执行指令i导致发生异常时，处理机的现场跟严格按程序顺序执行指令i时的现场相同。
- 不精确异常：当执行指令i导致发生异常时，处理机的现场（状态）与严格按程序顺序执行时指令i的现场不同。
  - 发生不精确异常的原因：

    因为当发生异常（设为指令i）时：
    - 流水线可能已经执行完按程序顺序时位于指令i之后的指令；
    - 流水线可能还没完成按程序顺序是指令i之前的指令。

动态调度的基本思想

- 动态调度的处理机要保持正确的异常行为
  - 对于一条会产生异常的指令来说，只有当处理机确切地知道该指令将被执行时，才允许它产生异常。
- 不精确异常使得在异常处理后难以接着继续执行程序。
- 即使保持了正确的异常行为，动态调度处理机仍可能发生不精确异常

- 记分牌算法和Tomasulo算法是两种比较典型的动态调度算法。

主要内容

- **相关基本概念**
  - 指令级并行的概念
  - 动态调度的基本思想
- 集中式动态调度技术：记分牌算法
- 分布式动态调度技术：Tomasulo算法

集中式动态调度：记分牌算法

*总体结构：

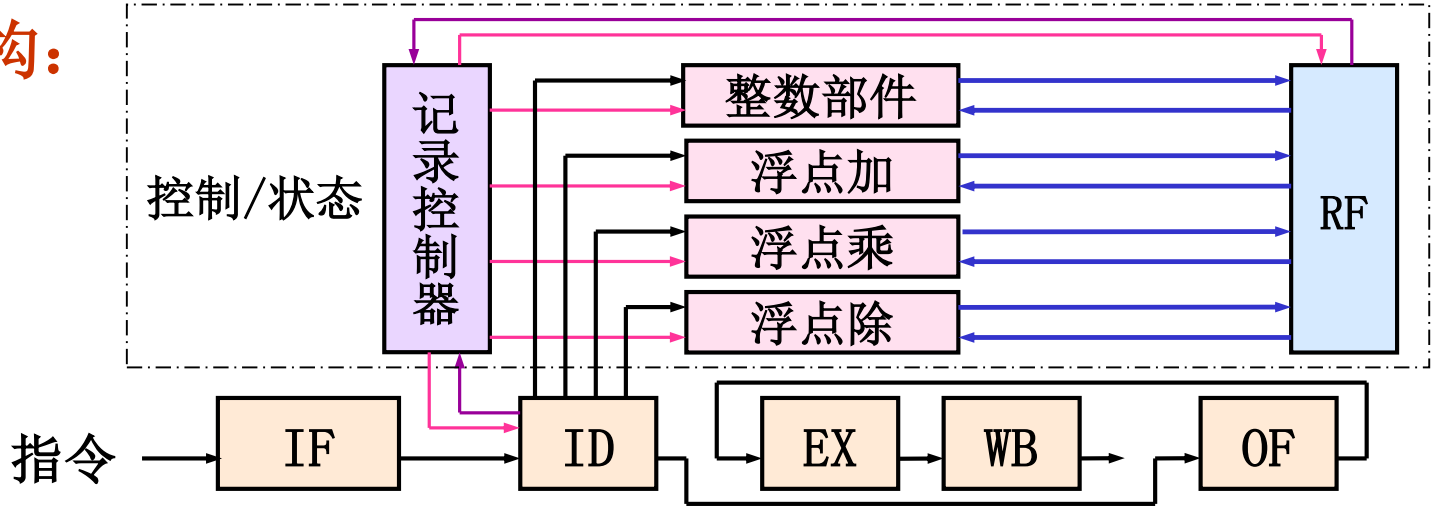

*调度原理：使用记录控制器集中记录各功能部件、流水线中各指令、源和目的REG的状态(记分牌)，然后进行统一调度

*记录控制器工作原理：

记录功能—检测并记录功能部件的使用冲突；

检测并记录REG的RAW、WAR、WAW数据相关

控制功能—根据记录的状态，控制指令流水(有冲突的指令推后进入功能部件，有相关的指令进入后推后执行)

记分牌的基本概念示意图

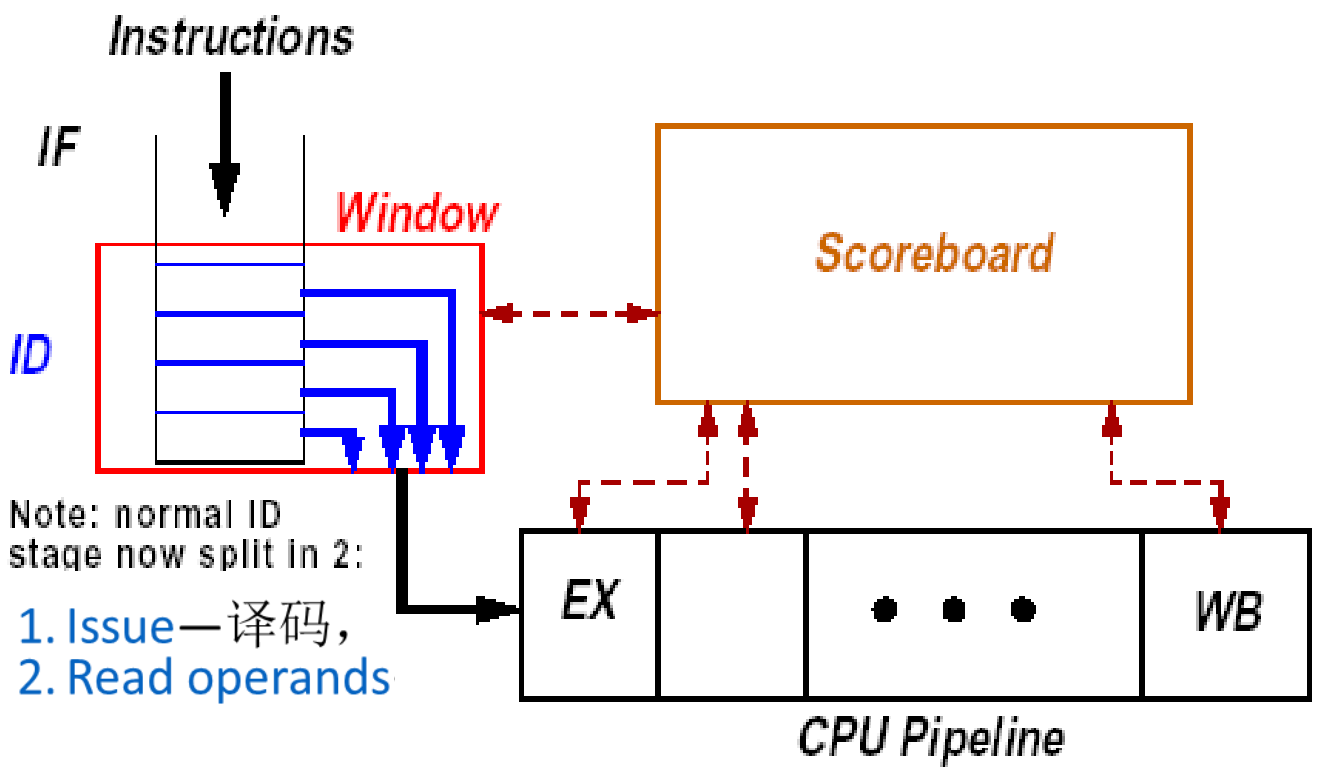

发射：控制相关，WAW

读操作数：RAW

WB：WAR

记分牌技术思路(1/2)

- Out-of-order execution 将ID 段分为:
  1. Issue—译码，检测结构相关
  2. Read operands—等待到无数据相关时，读操作数
- 起源于1963年推出的CDC6600
  - 4 FPU
  - 5 Memory Reference
  - 7 IU
- **集中相关检查**，互锁机制解决相关
- CDC 6600: **顺序发射，乱序执行，乱序完成**
- Load /store结构
- CDC6600流水线没有采用定向技术，只实现非精确中断
- 采用这种技术的微处理器企业
  - MIPS，HP， IBM
  - Sun 公司的UltraSparc
  - DEC Alpha

记分牌技术思路(2/2)

- **Out-of-order completion** => WAR, WAW hazards?
- **WAR**的一般解决方案
  - 对操作排队
  - 仅在读操作数阶段读寄存器
- 检测到**WAW**相关后，停止发射当前指令，直到前面相关指令完成
- 要提高效率，需要有多条指令进入执行阶段=>必须**有多个执行部件或执行部件是流水化**的
- **记分牌保存相关操作和状态**
- 记分牌用四段代替ID, EX, WB 三段

记分牌控制的四阶段(1/2)

1.Issue—指令译码，**检测结构相关、WAW**

- 如果当前指令所使用的功能部件空闲，并且没有其他活动的指令使用相同的目的寄存器（WAW), 记分牌发射该指令到功能部件，并更新记分牌内部数据，
- 如果有结构相关或WAW相关，则该指令的发射暂停，并且也不发射后继指令，直到相关解除.

2. Read operands—没有**数据相关**时，读操作数

- 如果先前已发射的正在运行的指令不对当前指令的源操作数寄存器进行写操作，或者一个正在工作的功能部件已经完成了对该寄存器的写操作，则该操作数有效。
- 操作数有效时，记分牌控制功能部件读操作数，准备执行。

记分牌在这一步动态地解决了**RAW相关**，指令可能会乱序执行。

记分牌控制的四阶段(2/2)

3.Execution—取到操作数后执行 (EX)

- 接到操作数后，功能部件开始执行
- 计算结果出来后，通知记分牌，结束该条指令的执行

4.Write result—finish execution (WB)

- 记分牌一旦获知功能部件执行完毕，检测**WAR相关**
- 如果没有WAR相关，就写结果；如果有WAR 相关，则暂停该条指令。

Example:

```
DIVD   F0,F2,F4
ADDD   F10,F0,F8
SUBD   F8,F8,F14
```

CDC 6600 scoreboard 将暂停 SUBD 直到ADDD 读取操作数后，才进入WR段处理。

Review on Scoreboard

- 遇到冲突，流水线该怎么办?
  - 传统：冲突后的指令全停顿
  - Scoreboard：冲突后的指令，冲突的才停顿
  - Tomasulo：冲突后的指令，冲突的也不停顿
- Scoreboard的宗旨：
  - 能往前走的，都往前走
  - 不能往前走的，一定有原因
- Scoreboard的具体做题步骤：
  - 标
  - 查
  - 通

记分牌控制的冲突检测 查什么?

1.Issue—指令译码

- 检测结构相关
- 检测WAW

2. Read operands—读操作数

- 检测RAW相关

3.Execution—取到操作数后执行 (EX)

- 操作数ready
- 结束该条指令的执行

4.Write result—finish execution (WB)

- 检测WAR相关

✓ **Example speed: 2 cc for Fl .pt. +,-; 10 for *; 40 cc for /**

记分牌的结构

怎么查?

1.Instruction status—记录正在执行的各条指令所处的状态步

2.Functional unit status—记录功能部件(FU)的状态。用9个域记录每个功能部件的9个参量：

Busy—指示该部件是否空闲

Op—该部件所完成的操作

Fi—其目的寄存器编号

Fj, Fk—源寄存器编号

Qj, Qk—产生源操作数Fj, Fk的功能部件

Rj, Rk—“yes”表示Fj，Fk中的操作数就绪且还未被取走

3.Register result status—如果存在功能部件对某一寄存器进行写操作，指示具体是哪个功能部件对该寄存器进行写操作。如果没有指令对该寄存器进行写操作，则该域为Blank

记分牌的流水线控制

怎么查?

Instruction status	Wait until	Bookkeeping
Issue	Not busy (FU) and not result(D)	Busy(FU)← yes; Op(FU)← op; Fi(FU)← `D'; Fj(FU)← `S1'; Fk(FU)← `S2'; Qj← Result('S1'); Qk← Result(`S2'); Rj← not Qj; Rk← not Qk; Result('D')← FU;
Read operands	Rj and Rk	Rj← No; Rk← No
Execution complete	Functional unit done	
Write result	∀f((Fj(f)≠Fi(FU) or Rj(f)=No) & (Fk(f) ≠Fi(FU) or Rk(f)=No))	∀f(if Qj(f)=FU then Rj(f)← Yes); ∀f(if Qk(f)=FU then Rk(f)← Yes); Result(Fi(FU))← 0; Busy(FU)← No

√

Scoreboard Example: Cycle 7

Instruction status:

Instruction		*j*	*k*	*Issue*	*Read Oper*	*Exec Comp*	*Write Result*
LD	F6	34+	R2	1	2	3	4
LD	F2	45+	R3	5	6	7	
MULTD	F0	F2	F4	6			
SUBD	F8	F6	F2	7			
DIVD	F10	F0	F6				
ADDD	F6	F8	F2				

Functional unit status:

Time	*Name*	*Busy*	*Op*	*dest Fi*	*S1 Fj*	*S2 Fk*	*FU Qj*	*FU Qk*	*Fj? Rj*	*Fk? Rk*
	Integer	Yes	Load	F2		R3				No
	Mult1	Yes	Mult	F0	F2	F4	Integer		No	Yes
	Mult2	No								
	Add	Yes	Sub	F8	F6	F2		Integer	Yes	No
	Divide	No								

Register result status:

Clock		*F0*	*F2*	*F4*	*F6*	*F8*	*F10*	*F12*	...	*F30*
7	*FU*	Mult1	Integer			Add				

- Read multiply operands?

记分牌的流水线控制

怎么标记?

Instruction status	Wait until	Bookkeeping
Issue	Not busy (FU) and not result(D)	Busy(FU)← yes; Op(FU)← op; Fi(FU)← `D'; Fj(FU)← `S1'; Fk(FU)← `S2'; Qj← Result('S1'); Qk← Result(`S2'); Rj← not Qj; Rk← not Qk; Result('D')← FU;
Read operands	Rj and Rk	Rj← No; Rk← No
Execution complete	Functional unit done	
Write result	∀f((Fj(f)≠Fi(FU) or Rj(f)=No) & (Fk(f) ≠Fi(FU) or Rk(f)=No))	∀f(if Qj(f)=FU then Rj(f)← Yes); ∀f(if Qk(f)=FU then Rk(f)← Yes); Result(Fi(FU))← 0; Busy(FU)← No

√

Scoreboard Example

Instruction status:

Instruction		*j*	*k*	*Issue*	*Read Oper*	*Exec Comp*	*Write Result*
LD	F6	34+	R2				
LD	F2	45+	R3				
MULTD	F0	F2	F4				
SUBD	F8	F6	F2				
DIVD	F10	F0	F6				
ADDD	F6	F8	F2				

Functional unit status:

Time	*Name*	*Busy*	*Op*	*dest Fi*	*S1 Fj*	*S2 Fk*	*FU Qj*	*FU Qk*	*Fj? Rj*	*Fk? Rk*
	Integer	No								
	Mult1	No								
	Mult2	No								
	Add	No								
	Divide	No								

Register result status:

Clock	*F0*	*F2*	*F4*	*F6*	*F8*	*F10*	*F12*	...	*F30*
FU									

Scoreboard Example: Cycle 1

Instruction status:

Instruction		*j*	*k*	*Issue*	*Read Oper*	*Exec Comp*	*Write Result*
LD	F6	34+	R2	1			
LD	F2	45+	R3				
MULTD	F0	F2	F4				
SUBD	F8	F6	F2				
DIVD	F10	F0	F6				
ADDD	F6	F8	F2				

Functional unit status:

Time	*Name*	*Busy*	*Op*	*dest Fi*	*S1 Fj*	*S2 Fk*	*FU Qj*	*FU Qk*	*Fj? Rj*	*Fk? Rk*
	Integer	Yes	Load	F6		R2				Yes
	Mult1	No								
	Mult2	No								
	Add	No								
	Divide	No								

Register result status:

Clock		*F0*	*F2*	*F4*	*F6*	*F8*	*F10*	*F12*	...	*F30*
1	*FU*				Integer					

Scoreboard Example: Cycle 2

Instruction status:

Instruction		*j*	*k*	*Issue*	*Read Oper*	*Exec Comp*	*Write Result*
LD	F6	34+	R2	1	2		
LD	F2	45+	R3				
MULTD	F0	F2	F4				
SUBD	F8	F6	F2				
DIVD	F10	F0	F6				
ADDD	F6	F8	F2				

Functional unit status:

Time	*Name*	*Busy*	*Op*	*dest Fi*	*S1 Fj*	*S2 Fk*	*FU Qj*	*FU Qk*	*Fj? Rj*	*Fk? Rk*
	Integer	Yes	Load	F6		R2				Yes
	Mult1	No								
	Mult2	No								
	Add	No								
	Divide	No								

Register result status:

Clock		*F0*	*F2*	*F4*	*F6*	*F8*	*F10*	*F12*	...	*F30*
2	*FU*				Integer					

- Issue 2nd LD?

Scoreboard Example: Cycle 3

Instruction status:

Instruction		*j*	*k*	*Issue*	*Read Oper*	*Exec Comp*	*Write Result*
LD	F6	34+	R2	1	2	3	
LD	F2	45+	R3				
MULTD	F0	F2	F4				
SUBD	F8	F6	F2				
DIVD	F10	F0	F6				
ADDD	F6	F8	F2				

Functional unit status:

Time	*Name*	*Busy*	*Op*	*dest Fi*	*S1 Fj*	*S2 Fk*	*FU Qj*	*FU Qk*	*Fj? Rj*	*Fk? Rk*
	Integer	Yes	Load	F6		R2				No
	Mult1	No								
	Mult2	No								
	Add	No								
	Divide	No								

Register result status:

Clock		*F0*	*F2*	*F4*	*F6*	*F8*	*F10*	*F12*	...	*F30*
3	*FU*				Integer					

- Issue MULT?

Scoreboard Example: Cycle 4

Instruction status:

Instruction		*j*	*k*	*Issue*	*Read Oper*	*Exec Comp*	*Write Result*
LD	F6	34+	R2	1	2	3	4
LD	F2	45+	R3				
MULTD	F0	F2	F4				
SUBD	F8	F6	F2				
DIVD	F10	F0	F6				
ADDD	F6	F8	F2				

Functional unit status:

Time	*Name*	*Busy*	*Op*	*dest Fi*	*S1 Fj*	*S2 Fk*	*FU Qj*	*FU Qk*	*Fj? Rj*	*Fk? Rk*
	Integer	No								
	Mult1	No								
	Mult2	No								
	Add	No								
	Divide	No								

Register result status:

Clock		*F0*	*F2*	*F4*	*F6*	*F8*	*F10*	*F12*	...	*F30*
4	*FU*				Integer					

Scoreboard Example: Cycle 5

Instruction status:

Instruction		*j*	*k*	*Issue*	*Read Oper*	*Exec Comp*	*Write Result*
LD	F6	34+	R2	1	2	3	4
LD	F2	45+	R3	5			
MULTD	F0	F2	F4				
SUBD	F8	F6	F2				
DIVD	F10	F0	F6				
ADDD	F6	F8	F2				

Functional unit status:

Time	*Name*	*Busy*	*Op*	*dest Fi*	*S1 Fj*	*S2 Fk*	*FU Qj*	*FU Qk*	*Fj? Rj*	*Fk? Rk*
	Integer	Yes	Load	F2		R3				Yes
	Mult1	No								
	Mult2	No								
	Add	No								
	Divide	No								

Register result status:

Clock		*F0*	*F2*	*F4*	*F6*	*F8*	*F10*	*F12*	...	*F30*
5	*FU*		Integer							

Scoreboard Example: Cycle 6

Instruction status:

Instruction		*j*	*k*	*Issue*	*Read Oper*	*Exec Comp*	*Write Result*
LD	F6	34+	R2	1	2	3	4
LD	F2	45+	R3	5	6		
MULTD	F0	F2	F4	6			
SUBD	F8	F6	F2				
DIVD	F10	F0	F6				
ADDD	F6	F8	F2				

Functional unit status:

Time	*Name*	*Busy*	*Op*	*dest Fi*	*S1 Fj*	*S2 Fk*	*FU Qj*	*FU Qk*	*Fj? Rj*	*Fk? Rk*
	Integer	~~Yes~~	~~Load~~	~~F2~~		~~R3~~				~~Yes~~
	Mult1	Yes	Mult	F0	F2	F4	Integer		No	Yes
	Mult2	~~No~~								
	Add	No								
	Divide	No								

Register result status:

Clock		*F0*	*F2*	*F4*	*F6*	*F8*	*F10*	*F12*	...	*F30*
6	*FU*	Mult1	Integer							

Scoreboard Example: Cycle 7

Instruction status:

Instruction		*j*	*k*	*Issue*	*Read Oper*	*Exec Comp*	*Write Result*
LD	F6	34+	R2	1	2	3	4
LD	F2	45+	R3	5	6	7	
MULTD	F0	F2	F4	6			
SUBD	F8	F6	F2	7			
DIVD	F10	F0	F6				
ADDD	F6	F8	F2				

Functional unit status:

Time	*Name*	*Busy*	*Op*	*dest Fi*	*S1 Fj*	*S2 Fk*	*FU Qj*	*FU Qk*	*Fj? Rj*	*Fk? Rk*
	Integer	Yes	Load	F2		R3				No
	Mult1	Yes	Mult	F0	F2	F4	Integer		No	Yes
	Mult2	No								
	Add	Yes	Sub	F8	F6	F2		Integer	Yes	No
	Divide	No								

Register result status:

Clock		*F0*	*F2*	*F4*	*F6*	*F8*	*F10*	*F12*	...	*F30*
7	*FU*	Mult1	Integer			Add				

- Read multiply operands?

Review on Scoreboard

- 遇到冲突，流水线该怎么办?
  - 传统：冲突后的指令全停顿
  - Scoreboard：冲突后的指令，冲突的才停顿
  - Tomasulo：冲突后的指令，冲突的也不停顿
- Scoreboard的宗旨：
  - 能往前走的，都往前走
  - 不能往前走的，一定有原因
- Scoreboard的具体做题步骤：
  - 标
  - 查
  - 通

Scoreboard Example: Cycle 7

Instruction status:

Instruction		*j*	*k*	*Issue*	*Read Oper*	*Exec Comp*	*Write Result*
LD	F6	34+	R2	1	2	3	4
LD	F2	45+	R3	5	6	7	
MULTD	F0	F2	F4	6			
SUBD	F8	F6	F2	7			
DIVD	F10	F0	F6				
ADDD	F6	F8	F2				

Functional unit status:

Time	*Name*	*Busy*	*Op*	*dest Fi*	*S1 Fj*	*S2 Fk*	*FU Qj*	*FU Qk*	*Fj? Rj*	*Fk? Rk*
	Integer	Yes	Load	F2		R3				No
	Mult1	Yes	Mult	F0	F2	F4	Integer		No	Yes
	Mult2	No								
	Add	Yes	Sub	F8	F6	F2		Integer	Yes	No
	Divide	No								

Register result status:

Clock		*F0*	*F2*	*F4*	*F6*	*F8*	*F10*	*F12*	...	*F30*
7	*FU*	Mult1	Integer			Add				

- Read multiply operands?

记分牌控制的冲突检测

查什么?

1.Issue—指令译码

- 检测结构相关
- 检测WAW

2. Read operands—读操作数

- 检测RAW相关

3.Execution—取到操作数后执行 (EX)

- 操作数ready
- 结束该条指令的执行

4.Write result—finish execution (WB)

- 检测WAR相关

✓ **Example speed: 2 cc for Fl .pt. +,-; 10 for *; 40 cc for /**

记分牌的流水线控制

怎么查?

Instruction status	Wait until	Bookkeeping
Issue	Not busy (FU) and not result(D)	Busy(FU)← yes; Op(FU)← op; Fi(FU)← `D'; Fj(FU)← `S1'; Fk(FU)← `S2'; Qj← Result('S1'); Qk← Result(`S2'); Rj← not Qj; Rk← not Qk; Result('D')← FU;
Read operands	Rj and Rk	Rj← No; Rk← No
Execution complete	Functional unit done	
Write result	∀f((Fj(f)≠Fi(FU) or Rj(f)=No) & (Fk(f) ≠Fi(FU) or Rk(f)=No))	∀f(if Qj(f)=FU then Rj(f)← Yes); ∀f(if Qk(f)=FU then Rk(f)← Yes); Result(Fi(FU))← 0; Busy(FU)← No

√

Scoreboard Example: Cycle 7

Instruction status:

Instruction		*j*	*k*	*Issue*	*Read Oper*	*Exec Comp*	*Write Result*
LD	F6	34+	R2	1	2	3	4
LD	F2	45+	R3	5	6	7	
MULTD	F0	F2	F4	6			
SUBD	F8	F6	F2	7			
DIVD	F10	F0	F6				
ADDD	F6	F8	F2				

Functional unit status:

Time	*Name*	*Busy*	*Op*	*dest Fi*	*S1 Fj*	*S2 Fk*	*FU Qj*	*FU Qk*	*Fj? Rj*	*Fk? Rk*
	Integer	Yes	Load	F2		R3				No
	Mult1	Yes	Mult	F0	F2	F4	Integer		No	Yes
	Mult2	No								
	Add	Yes	Sub	F8	F6	F2		Integer	Yes	No
	Divide	No								

Register result status:

Clock		*F0*	*F2*	*F4*	*F6*	*F8*	*F10*	*F12*	...	*F30*
7	*FU*	Mult1	Integer			Add				

- Read multiply operands?

记分牌的流水线控制

怎么标记?

Instruction status	Wait until	Bookkeeping
Issue	Not busy (FU) and not result(D)	Busy(FU)← yes; Op(FU)← op; Fi(FU)← `D'; Fj(FU)← `S1'; Fk(FU)← `S2'; Qj← Result('S1'); Qk← Result(`S2'); Rj← not Qj; Rk← not Qk; Result('D')← FU;
Read operands	Rj and Rk	Rj← No; Rk← No
Execution complete	Functional unit done	
Write result	∀f((Fj(f)≠Fi(FU) or Rj(f)=No) & (Fk(f) ≠Fi(FU) or Rk(f)=No))	∀f(if Qj(f)=FU then Rj(f)← Yes); ∀f(if Qk(f)=FU then Rk(f)← Yes); Result(Fi(FU))← 0; Busy(FU)← No

√

Scoreboard Example: Cycle 8a

Instruction status:

Instruction		*j*	*k*	*Issue*	*Read Oper*	*Exec Comp*	*Write Result*
LD	F6	34+	R2	1	2	3	4
LD	F2	45+	R3	5	6	7	
MULTD	F0	F2	F4	6			
SUBD	F8	F6	F2	7			
DIVD	F10	F0	F6	8			
ADDD	F6	F8	F2				

Functional unit status:

Time	*Name*	*Busy*	*Op*	*dest Fi*	*S1 Fj*	*S2 Fk*	*FU Qj*	*FU Qk*	*Fj? Rj*	*Fk? Rk*
	Integer	Yes	Load	F2		R3				No
	Mult1	Yes	Mult	F0	F2	F4	Integer		No	Yes
	Mult2	No								
	Add	Yes	Sub	F8	F6	F2		Integer	Yes	No
	Divide	Yes	Div	F10	F0	F6	Mult1		No	Yes

Register result status:

Clock		*F0*	*F2*	*F4*	*F6*	*F8*	*F10*	*F12*	*...*	*F30*
8	*FU*	Mult1	Integer			Add	Divide			

Scoreboard Example: Cycle 8b

Instruction status:

Instruction		*j*	*k*	*Issue*	*Read Oper*	*Exec Comp*	*Write Result*
LD	F6	34+	R2	1	2	3	4
LD	F2	45+	R3	5	6	7	8
MULTD	F0	F2	F4	6			
SUBD	F8	F6	F2	7			
DIVD	F10	F0	F6	8			
ADDD	F6	F8	F2				

Functional unit status:

Time	*Name*	*Busy*	*Op*	*dest Fi*	*S1 Fj*	*S2 Fk*	*FU Qj*	*FU Qk*	*Fj? Rj*	*Fk? Rk*
	Integer	No								
	Mult1	Yes	Mult	F0	F2	F4			Yes	Yes
	Mult2	No								
	Add	Yes	Sub	F8	F6	F2			Yes	Yes
	Divide	Yes	Div	F10	F0	F6	Mult1		No	Yes

Register result status:

Clock		*F0*	*F2*	*F4*	*F6*	*F8*	*F10*	*F12*	*...*	*F30*
8	*FU*	Mult1				Add	Divide			

Scoreboard Example: Cycle 9

Instruction status:

Instruction		*j*	*k*	*Issue*	*Read Oper*	*Exec Comp*	*Write Result*
LD	F6	34+	R2	1	2	3	4
LD	F2	45+	R3	5	6	7	8
MULTD	F0	F2	F4	6	9		
SUBD	F8	F6	F2	7	9		
DIVD	F10	F0	F6	8			
ADDD	F6	F8	F2				

Functional unit status:

Note Remaining

Time	*Name*	*Busy*	*Op*	*dest Fi*	*S1 Fj*	*S2 Fk*	*FU Qj*	*FU Qk*	*Fj? Rj*	*Fk? Rk*
	Integer	No								
10	Mult1	Yes	Mult	F0	F2	F4			Yes	Yes
	Mult2	No								
2	Add	Yes	Sub	F8	F6	F2			Yes	Yes
	Divide	Yes	Div	F10	F0	F6	Mult1		No	Yes

Register result status:

Clock		*F0*	*F2*	*F4*	*F6*	*F8*	*F10*	*F12*	*...*	*F30*
9	*FU*	Mult1				Add	Divide			

- Read operands for MULT & SUB? Issue ADDD?

Scoreboard Example: Cycle 10

Instruction status:

Instruction		*j*	*k*	*Issue*	*Read Oper*	*Exec Comp*	*Write Result*
LD	F6	34+	R2	1	2	3	4
LD	F2	45+	R3	5	6	7	8
MULTD	F0	F2	F4	6	9		
SUBD	F8	F6	F2	7	9		
DIVD	F10	F0	F6	8			
ADDD	F6	F8	F2				

Functional unit status:

Time	*Name*	*Busy*	*Op*	*dest Fi*	*S1 Fj*	*S2 Fk*	*FU Qj*	*FU Qk*	*Fj? Rj*	*Fk? Rk*
	Integer	No								
9	Mult1	Yes	Mult	F0	F2	F4			No	No
	Mult2	No								
1	Add	Yes	Sub	F8	F6	F2			No	No
	Divide	Yes	Div	F10	F0	F6	Mult1		No	Yes

Register result status:

Clock		*F0*	*F2*	*F4*	*F6*	*F8*	*F10*	*F12*	*...*	*F30*
10	*FU*	Mult1				Add	Divide			

Scoreboard Example: Cycle 11

Instruction status:

Instruction		*j*	*k*	*Issue*	*Read Oper*	*Exec Comp*	*Write Result*
LD	F6	34+	R2	1	2	3	4
LD	F2	45+	R3	5	6	7	8
MULTD	F0	F2	F4	6	9		
SUBD	F8	F6	F2	7	9	11	
DIVD	F10	F0	F6	8			
ADDD	F6	F8	F2				

Functional unit status:

Time	*Name*	*Busy*	*Op*	*dest Fi*	*S1 Fj*	*S2 Fk*	*FU Qj*	*FU Qk*	*Fj? Rj*	*Fk? Rk*
	Integer	No								
8	Mult1	Yes	Mult	F0	F2	F4			No	No
	Mult2	No								
0	Add	Yes	Sub	F8	F6	F2			No	No
	Divide	Yes	Div	F10	F0	F6	Mult1		No	Yes

Register result status:

Clock		*F0*	*F2*	*F4*	*F6*	*F8*	*F10*	*F12*	*...*	*F30*
11	*FU*	Mult1				Add	Divide			

Scoreboard Example: Cycle 12

Instruction status:

Instruction		*j*	*k*	*Issue*	*Read Oper*	*Exec Comp*	*Write Result*
LD	F6	34+	R2	1	2	3	4
LD	F2	45+	R3	5	6	7	8
MULTD	F0	F2	F4	6	9		
SUBD	F8	F6	F2	7	9	11	12
DIVD	F10	F0	F6	8			
ADDD	F6	F8	F2				

Functional unit status:

Time	*Name*	*Busy*	*Op*	*dest Fi*	*S1 Fj*	*S2 Fk*	*FU Qj*	*FU Qk*	*Fj? Rj*	*Fk? Rk*
	Integer	No								
7	Mult1	Yes	Mult	F0	F2	F4			No	No
	Mult2	No								
	Add	No								
	Divide	Yes	Div	F10	F0	F6	Mult1		No	Yes

Register result status:

Clock		*F0*	*F2*	*F4*	*F6*	*F8*	*F10*	*F12*	*...*	*F30*
12	*FU*	Mult1					Divide			

- Read operands for DIVD?

Scoreboard Example: Cycle 13

Instruction status:

Instruction		*j*	*k*	*Issue*	*Read Oper*	*Exec Comp*	*Write Result*
LD	F6	34+	R2	1	2	3	4
LD	F2	45+	R3	5	6	7	8
MULTD	F0	F2	F4	6	9		
SUBD	F8	F6	F2	7	9	11	12
DIVD	F10	F0	F6	8			
ADDD	F6	F8	F2	13			

Functional unit status:

Time	*Name*	*Busy*	*Op*	*dest Fi*	*S1 Fj*	*S2 Fk*	*FU Qj*	*FU Qk*	*Fj? Rj*	*Fk? Rk*
	Integer	No								
6	Mult1	Yes	Mult	F0	F2	F4			No	No
	Mult2	No								
	Add	Yes	Add	F6	F8	F2			Yes	Yes
	Divide	Yes	Div	F10	F0	F6	Mult1		No	Yes

Register result status:

Clock		*F0*	*F2*	*F4*	*F6*	*F8*	*F10*	*F12*	*...*	*F30*
13	*FU*	Mult1			Add		Divide			

Scoreboard Example: Cycle 14

Instruction status:

Instruction		*j*	*k*	*Issue*	*Read Oper*	*Exec Comp*	*Write Result*
LD	F6	34+	R2	1	2	3	4
LD	F2	45+	R3	5	6	7	8
MULTD	F0	F2	F4	6	9		
SUBD	F8	F6	F2	7	9	11	12
DIVD	F10	F0	F6	8			
ADDD	F6	F8	F2	13	14		

Functional unit status:

Time	*Name*	*Busy*	*Op*	*dest Fi*	*S1 Fj*	*S2 Fk*	*FU Qj*	*FU Qk*	*Fj? Rj*	*Fk? Rk*
	Integer	No								
5	Mult1	Yes	Mult	F0	F2	F4			No	No
	Mult2	No								
2	Add	Yes	Add	F6	F8	F2			Yes	Yes
	Divide	Yes	Div	F10	F0	F6	Mult1		No	Yes

Register result status:

Clock		*F0*	*F2*	*F4*	*F6*	*F8*	*F10*	*F12*	*...*	*F30*
14	*FU*	Mult1			Add		Divide			

Scoreboard Example: Cycle 15

Instruction status:

Instruction		*j*	*k*	*Issue*	*Read Oper*	*Exec Comp*	*Write Result*
LD	F6	34+	R2	1	2	3	4
LD	F2	45+	R3	5	6	7	8
MULTD	F0	F2	F4	6	9		
SUBD	F8	F6	F2	7	9	11	12
DIVD	F10	F0	F6	8			
ADDD	F6	F8	F2	13	14		

Functional unit status:

Time	*Name*	*Busy*	*Op*	*dest Fi*	*S1 Fj*	*S2 Fk*	*FU Qj*	*FU Qk*	*Fj? Rj*	*Fk? Rk*
	Integer	No								
4	Mult1	Yes	Mult	F0	F2	F4			No	No
	Mult2	No								
1	Add	Yes	Add	F6	F8	F2			No	No
	Divide	Yes	Div	F10	F0	F6	Mult1		No	Yes

Register result status:

Clock		*F0*	*F2*	*F4*	*F6*	*F8*	*F10*	*F12*	*...*	*F30*
15	*FU*	Mult1			Add		Divide			

Scoreboard Example: Cycle 16

Instruction status:

Instruction		*j*	*k*	*Issue*	*Read Oper*	*Exec Comp*	*Write Result*
LD	F6	34+	R2	1	2	3	4
LD	F2	45+	R3	5	6	7	8
MULTD	F0	F2	F4	6	9		
SUBD	F8	F6	F2	7	9	11	12
DIVD	F10	F0	F6	8			
ADDD	F6	F8	F2	13	14	16	

Functional unit status:

Time	*Name*	*Busy*	*Op*	*dest Fi*	*S1 Fj*	*S2 Fk*	*FU Qj*	*FU Qk*	*Fj? Rj*	*Fk? Rk*
	Integer	No								
3	Mult1	Yes	Mult	F0	F2	F4			No	No
	Mult2	No								
0	Add	Yes	Add	F6	F8	F2			No	No
	Divide	Yes	Div	F10	F0	F6	Mult1		No	Yes

Register result status:

Clock		*F0*	*F2*	*F4*	*F6*	*F8*	*F10*	*F12*	...	*F30*
16	*FU*	Mult1			Add		Divide			

Scoreboard Example: Cycle 17

Instruction status:

Instruction		*j*	*k*	*Issue*	*Read Oper*	*Exec Comp*	*Write Result*
LD	F6	34+	R2	1	2	3	4
LD	F2	45+	R3	5	6	7	8
MULTD	F0	F2	F4	6	9		
SUBD	F8	F6	F2	7	9	11	12
DIVD	F10	F0	F6	8			
ADDD	F6	F8	F2	13	14	16	

WAR Hazard!

Functional unit status:

Time	*Name*	*Busy*	*Op*	*dest Fi*	*S1 Fj*	*S2 Fk*	*FU Qj*	*FU Qk*	*Fj? Rj*	*Fk? Rk*
	Integer	No								
2	Mult1	Yes	Mult	F0	F2	F4			No	No
	Mult2	No								
	Add	Yes	Add	F6	F8	F2			No	No
	Divide	Yes	Div	F10	F0	F6	Mult1		No	Yes

Register result status:

Clock		*F0*	*F2*	*F4*	*F6*	*F8*	*F10*	*F12*	...	*F30*
17	*FU*	Mult1			Add		Divide			

- Why not write result of ADD???

Scoreboard Example: Cycle 18

Instruction status:

Instruction		*j*	*k*	*Issue*	*Read Oper*	*Exec Comp*	*Write Result*
LD	F6	34+	R2	1	2	3	4
LD	F2	45+	R3	5	6	7	8
MULTD	F0	F2	F4	6	9		
SUBD	F8	F6	F2	7	9	11	12
DIVD	F10	F0	F6	8			
ADDD	F6	F8	F2	13	14	16	

Functional unit status:

Time	*Name*	*Busy*	*Op*	*dest Fi*	*S1 Fj*	*S2 Fk*	*FU Qj*	*FU Qk*	*Fj? Rj*	*Fk? Rk*
	Integer	No								
1	Mult1	Yes	Mult	F0	F2	F4			No	No
	Mult2	No								
	Add	Yes	Add	F6	F8	F2			No	No
	Divide	Yes	Div	F10	F0	F6	Mult1		No	Yes

Register result status:

Clock		*F0*	*F2*	*F4*	*F6*	*F8*	*F10*	*F12*	*...*	*F30*
18	*FU*	Mult1			Add		Divide			

Scoreboard Example: Cycle 19

Instruction status:

Instruction		*j*	*k*	*Issue*	*Read Oper*	*Exec Comp*	*Write Result*
LD	F6	34+	R2	1	2	3	4
LD	F2	45+	R3	5	6	7	8
MULTD	F0	F2	F4	6	9	19	
SUBD	F8	F6	F2	7	9	11	12
DIVD	F10	F0	F6	8			
ADDD	F6	F8	F2	13	14	16	

Functional unit status:

Time	*Name*	*Busy*	*Op*	*dest Fi*	*S1 Fj*	*S2 Fk*	*FU Qj*	*FU Qk*	*Fj? Rj*	*Fk? Rk*
	Integer	No								
0	Mult1	Yes	Mult	F0	F2	F4			No	No
	Mult2	No								
	Add	Yes	Add	F6	F8	F2			No	No
	Divide	Yes	Div	F10	F0	F6	Mult1		No	Yes

Register result status:

Clock		*F0*	*F2*	*F4*	*F6*	*F8*	*F10*	*F12*	*...*	*F30*
19	*FU*	Mult1			Add		Divide			

Scoreboard Example: Cycle 20

Instruction status:

Instruction		*j*	*k*	*Issue*	*Read Oper*	*Exec Comp*	*Write Result*
LD	F6	34+	R2	1	2	3	4
LD	F2	45+	R3	5	6	7	8
MULTD	F0	F2	F4	6	9	19	20
SUBD	F8	F6	F2	7	9	11	12
DIVD	F10	F0	F6	8			
ADDD	F6	F8	F2	13	14	16	

Functional unit status:

Time	*Name*	*Busy*	*Op*	*dest Fi*	*S1 Fj*	*S2 Fk*	*FU Qj*	*FU Qk*	*Fj? Rj*	*Fk? Rk*
	Integer	No								
	Mult1	No								
	Mult2	No								
	Add	Yes	Add	F6	F8	F2			No	No
	Divide	Yes	Div	F10	F0	F6			Yes	Yes

Register result status:

Clock		*F0*	*F2*	*F4*	*F6*	*F8*	*F10*	*F12*	*...*	*F30*
20	*FU*				Add		Divide			

Scoreboard Example: Cycle 21

Instruction status:

Instruction		*j*	*k*	*Issue*	*Read Oper*	*Exec Comp*	*Write Result*
LD	F6	34+	R2	1	2	3	4
LD	F2	45+	R3	5	6	7	8
MULTD	F0	F2	F4	6	9	19	20
SUBD	F8	F6	F2	7	9	11	12
DIVD	F10	F0	F6	8	21		
ADDD	F6	F8	F2	13	14	16	

Functional unit status:

Time	*Name*	*Busy*	*Op*	*dest Fi*	*S1 Fj*	*S2 Fk*	*FU Qj*	*FU Qk*	*Fj? Rj*	*Fk? Rk*
	Integer	No								
	Mult1	No								
	Mult2	No								
	Add	Yes	Add	F6	F8	F2			No	No
40	Divide	Yes	Div	F10	F0	F6			Yes	Yes

Register result status:

Clock		*F0*	*F2*	*F4*	*F6*	*F8*	*F10*	*F12*	...	*F30*
21	*FU*				Add		Divide			

- WAR Hazard is now gone…

Scoreboard Example: Cycle 22

Instruction status:

Instruction		*j*	*k*	*Issue*	*Read Oper*	*Exec Comp*	*Write Result*
LD	F6	34+	R2	1	2	3	4
LD	F2	45+	R3	5	6	7	8
MULTD	F0	F2	F4	6	9	19	20
SUBD	F8	F6	F2	7	9	11	12
DIVD	F10	F0	F6	8	21		
ADDD	F6	F8	F2	13	14	16	22

Functional unit status:

Time	*Name*	*Busy*	*Op*	*dest Fi*	*S1 Fj*	*S2 Fk*	*FU Qj*	*FU Qk*	*Fj? Rj*	*Fk R*
	Integer	No								
	Mult1	No								
	Mult2	No								
	Add	No								
39	Divide	Yes	Div	F10	F0	F6			No	N

Register result status:

Clock		*F0*	*F2*	*F4*	*F6*	*F8*	*F10*	*F12*	...	*F3*
22	*FU*						Divide			

Scoreboard Example: Cycle 61

Instruction status:

Instruction		*j*	*k*	*Issue*	*Read Oper*	*Exec Comp*	*Write Result*
LD	F6	34+	R2	1	2	3	4
LD	F2	45+	R3	5	6	7	8
MULTD	F0	F2	F4	6	9	19	20
SUBD	F8	F6	F2	7	9	11	12
DIVD	F10	F0	F6	8	21	61	
ADDD	F6	F8	F2	13	14	16	22

Functional unit status:

Time	*Name*	*Busy*	*Op*	*dest Fi*	*S1 Fj*	*S2 Fk*	*FU Qj*	*FU Qk*	*Fj? Rj*	*Fk? Rk*
	Integer	No								
	Mult1	No								
	Mult2	No								
	Add	No								
0	Divide	Yes	Div	F10	F0	F6			No	No

Register result status:

Clock		*F0*	*F2*	*F4*	*F6*	*F8*	*F10*	*F12*	...	*F30*
61	*FU*						Divide			

Scoreboard Example: Cycle 62

Instruction status:

Instruction		*j*	*k*	*Issue*	*Read Oper*	*Exec Comp*	*Write Result*
LD	F6	34+	R2	1	2	3	4
LD	F2	45+	R3	5	6	7	8
MULTD	F0	F2	F4	6	9	19	20
SUBD	F8	F6	F2	7	9	11	12
DIVD	F10	F0	F6	8	21	61	62
ADDD	F6	F8	F2	13	14	16	22

Functional unit status:

Time	*Name*	*Busy*	*Op*	*dest Fi*	*S1 Fj*	*S2 Fk*	*FU Qj*	*FU Qk*	*Fj? Rj*	*Fk? Rk*
	Integer	No								
	Mult1	No								
	Mult2	No								
	Add	No								
	Divide	No								

Register result status:

Clock		*F0*	*F2*	*F4*	*F6*	*F8*	*F10*	*F12*	...	*F30*
62	*FU*									

Scoreboard Example: Cycle 62

Instruction status:

Instruction		*j*	*k*	*Issue*	*Read Oper*	*Exec Comp*	*Write Result*
LD	F6	34+	R2	1	2	3	4
LD	F2	45+	R3	5	6	7	8
MULTD	F0	F2	F4	6	9	19	20
SUBD	F8	F6	F2	7	9	11	12
DIVD	F10	F0	F6	8	21	61	62
ADDD	F6	F8	F2	13	14	16	22

Functional unit status:

Time	*Name*	*Busy*	*Op*	*dest Fi*	*S1 Fj*	*S2 Fk*	*FU Qj*	*FU Qk*	*Fj? Rj*	*Fk? Rk*
	Integer	No								
	Mult1	No								
	Mult2	No								
	Add	No								
	Divide	No								

Register result status:

Clock		*F0*	*F2*	*F4*	*F6*	*F8*	*F10*	*F12*	...	*F30*
62	*FU*									

- In-order issue; out-of-order execute & commit

Scoreboard Review

- 硬件方法挖掘ILP
  - 编译阶段无法确定的相关性，可以在程序执行时，用硬件方法判定
  - 这种方法还可以使得程序代码在其他机器上有效地执行
- 记分牌的主要思想：允许stall后的指令继续……
  - 乱序执行(out-of-order execution) => 乱序完成(out-of-order completion)
  - 发射前检测结构相关和WAW相关
  - 读操作数前检测RAW相关
  - 写结果前处理WAR相关

Scoreboard Limitations

CDC 6600 scoreboard的主要缺陷:

- 没有定向数据通路
- 指令窗口较小，仅局限于基本块内的调度
- 功能部件数较少，容易产生结构相关，特别是其Load/store操作也是用IU部件完成的（整数单元）
- 结构冲突时不能发射
- WAR相关是通过等待解决的
- WAW相关时，不会进入IS阶段

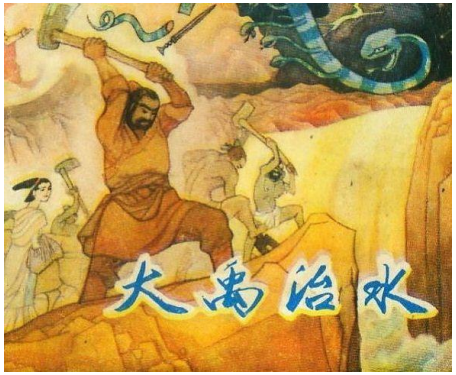

主要内容

- **相关基本概念**
  - 指令级并行的概念
  - 动态调度的基本思想
- 集中式动态调度技术：记分牌算法
- 分布式动态调度技术：Tomasulo算法

Tomasulo算法

- 首次在IBM 360/91上使用（CDC6600推出三年后）
- 目标:在没有专用编译器的情况下，提高浮点性能
- 给定条件：
  - 少数FP寄存器 (IBM360中4个)，阻止编译器对操作的有益调度
  - 较长的内存访问和较长的FP延迟
  - 促使Tomasulo尽量想办法设计出更加高效的寄存器—硬件重命名!
- **Why Study 1966 Computer?**
- **The descendants of this have flourished!**
  - **Alpha 21264, HP 8000, MIPS 10000, Pentium III, PowerPC 604, …**

Tomasulo算法

Value依赖 vs name依赖

1. 核心思想
   - 记录和检测指令相关，操作数一旦就绪就立即执行，把发生RAW冲突的可能性减少到最小；
   - 通过寄存器换名来消除WAR冲突和WAW冲突。

2. 寄存器换名可以消除WAR冲突和WAW冲突
   - 考虑以下代码：

```
DIV.D    F0, F2, F4
ADD.D    F6, F0, F8
S.D      F6, 0(R1)
SUB.D    F8, F10, F14
MUL.D    F6,  F10, F8
```

反相关（F8）导致WAR冲突

输出相关（F6）导致WAW冲突

Tomasulo算法

- 消除名相关
  - 引入两个临时寄存器S和T
  - 把这段代码改写为：

```
DIV.D    F0，F2，F4
ADD.D    S，F0，F8
S.D      S，0（R1）
SUB.D    T，F10，F14
MUL.D    F6，F10，T
```

两个F6都换名为S

两个F8都换名为T

3. 分布式动态调度(Tomasulo算法)技术

*实现原理：将状态记录与控制 分散到各个功能部件中

*关键技术：寄存器重命名、动态存储器地址判别技术

Tomasulo算法

- 控制和缓存分布在各功能部件（FU）中
  - FU 缓存称“reservation stations”；用于保存等待发射的指令的操作数
- 指令中的寄存器用数值或指向RS的指针代替—register renaming
  - 避免 WAR、WAW 冲突
  - RS多于寄存器，因此可以做更多编译器无法做的优化
- 给FU的结果是通过CDB从RS来，而不是从register来的
  - Common Data Bus广播结果给所有FU
- Load和Store部件也看作带有RS的功能部件

Tomasulo-based FPU for MIPS

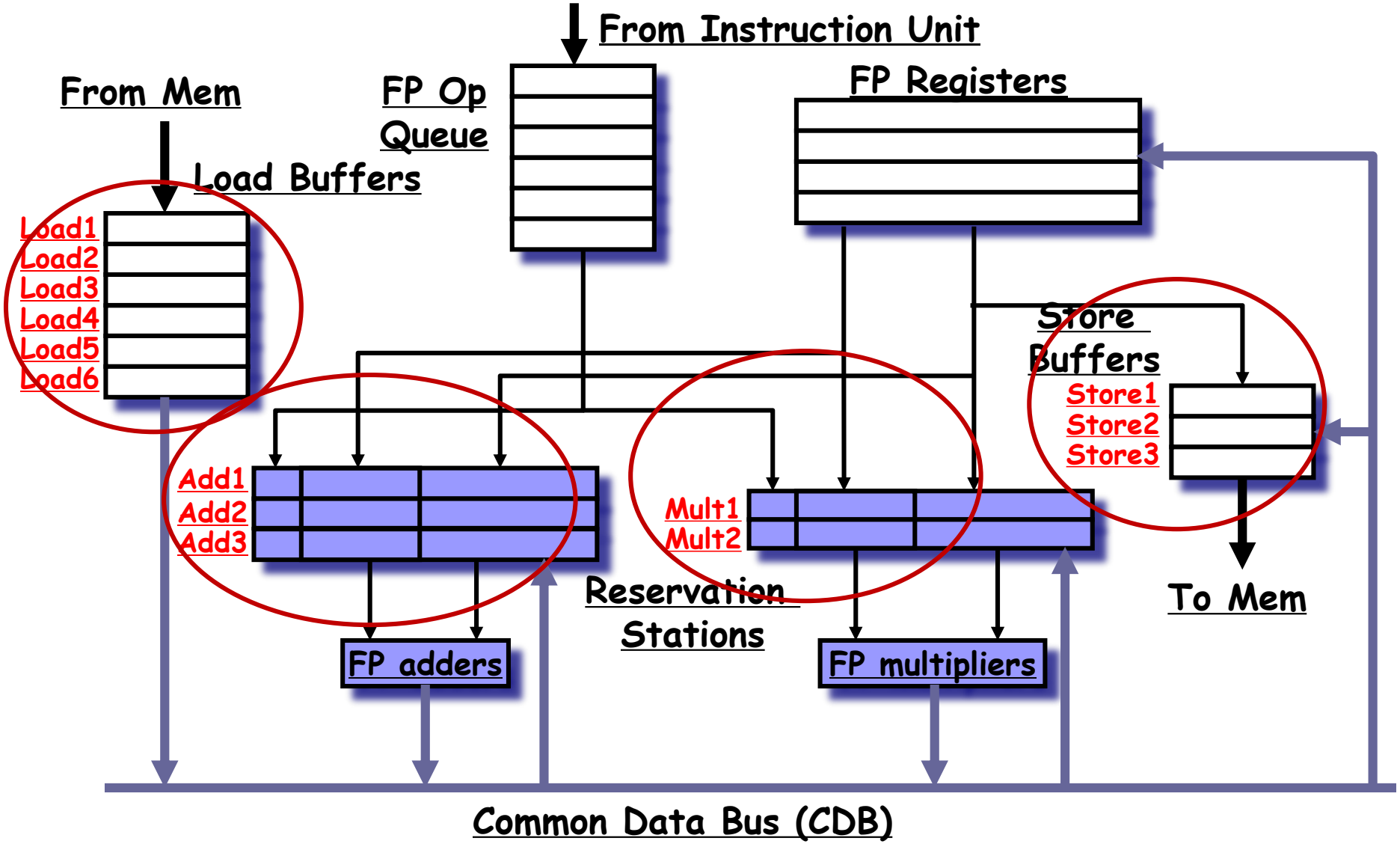

Reservation Station 结构

- **Busy:** 为“yes”表示本保留站或缓冲单元“忙”
- **Op:** 功能部件中进行的操作(e.g., + or –)
- **Vj, Vk:** 源操作数的值
  - 对于load来说，Vk字段用于保存偏移量。
  - Store 缓冲区有Vk域，用于存放要写入存储器的值
- **Qj, Qk:** 产生源操作数的RS(value to be written)
  - 注： Qj, Qk=0 =>操作数已经就绪或者不需要
  - 对于每一个操作数来说，V或Q字段只有一个有效。
- **A:** 仅load和store缓冲器有该字段。开始是存放指令中的立即数字段，地址计算后存放有效地址

Register result status: 对该寄存器进行写操作的功能部件

Tomasulo 算法的三个阶段

- 1. Issue—从FP操作队列中取指令
  - 如果RS空闲(无结构冲突)，则控制发射指令和发送操作数 (renames registers).
  - 通过register renaming消除WAR，WAW相关
- 2. Execute—operate on operands (EX)
  - 当两个操作数就绪后，就可以执行；如果没有准备好，则监测Common Data Bus 以等待获取结果。【如果多条rs准备好，一个FU怎么办？】
  - 通过推迟指令执行避免RAW相关
- 3. Write result—finish execution (WB)
  - 将结果通过Common Data Bus传给所有等待该结果的部件;表示RS可用
- Normal data bus: data + destination (“go to” bus)
- Common data bus: data + source (“come from” bus)
  - 广播方式传送
  - 64位数据 + 4位功能部件源地址（ FU source address）
  - 如果产生结果的部件与RS中等待的部件匹配，就进行写操作
- Example speed: 2 cc for Fl .pt. +,-; 10 for *; 40 cc for /

Assume load takes 2 clocks

Tomasulo Example

Instruction stream

Instruction status:

Instruction		*j*	*k*	*Issue*	*Exec Comp*	*Write Result*
LD	F6	34+	R2			
LD	F2	45+	R3			
MULTD	F0	F2	F4			
SUBD	F8	F6	F2			
DIVD	F10	F0	F6			
ADDD	F6	F8	F2			

	Busy	Address
Load1	No	
Load2	No	
Load3	No	

3 Load/Buffers

Reservation Stations:

Time	*Name*	*Busy*	*Op*	*S1 Vj*	*S2 Vk*	*RS Qj*	*RS Qk*
	Add1	No					
	Add2	No					
	Add3	No					
	Mult1	No					
	Mult2	No					

FU count down

3 FP Adder R.S.
2 FP Mult R.S.

Register result status:

Clock		*F0*	*F2*	*F4*	*F6*	*F8*	*F10*	*F12*	...	*F30*
0	*FU*									

Clock cycle counter

Tomasulo Example Cycle 1

Instruction status:

Instruction		*j*	*k*	*Issue*	*Exec Comp*	*Write Result*
LD	F6	34+	R2	1		
LD	F2	45+	R3			
MULTD	F0	F2	F4			
SUBD	F8	F6	F2			
DIVD	F10	F0	F6			
ADDD	F6	F8	F2			

	Busy	*Address*
Load1	Yes	34+R2
Load2	No	
Load3	No	

Reservation Stations:

Time	*Name*	*Busy*	*Op*	*S1 Vj*	*S2 Vk*	*RS Qj*	*RS Qk*
	Add1	No					
	Add2	No					
	Add3	No					
	Mult1	No					
	Mult2	No					

Register result status:

Clock		*F0*	*F2*	*F4*	*F6*	*F8*	*F10*	*F12*	...	*F30*
1	*FU*				Load1					

Tomasulo Example Cycle 2

Instruction status:

Instruction		*j*	*k*	*Issue*	*Exec Comp*	*Write Result*
LD	F6	34+	R2	1		
LD	F2	45+	R3	2		
MULTD	F0	F2	F4			
SUBD	F8	F6	F2			
DIVD	F10	F0	F6			
ADDD	F6	F8	F2			

	Busy	Address
Load1	Yes	34+R2
Load2	Yes	45+R3
Load3	No	

Reservation Stations:

Time	*Name*	*Busy*	*Op*	*S1 Vj*	*S2 Vk*	*RS Qj*	*RS Qk*
	Add1	No					
	Add2	No					
	Add3	No					
	Mult1	No					
	Mult2	No					

Register result status:

Clock		*F0*	*F2*	*F4*	*F6*	*F8*	*F10*	*F12*	...	*F30*
2	*FU*		Load2		Load1					

Note: Can have multiple loads outstanding

Tomasulo Example Cycle 3

Instruction status:

Instruction		*j*	*k*	*Issue*	*Exec Comp*	*Write Result*
LD	F6	34+	R2	1	3	
LD	F2	45+	R3	2		
MULTD	F0	F2	F4	3		
SUBD	F8	F6	F2			
DIVD	F10	F0	F6			
ADDD	F6	F8	F2			

	Busy	Address
Load1	Yes	34+R2
Load2	Yes	45+R3
Load3	No	

Reservation Stations:

Time	*Name*	*Busy*	*Op*	*S1 Vj*	*S2 Vk*	*RS Qj*	*RS Qk*
	Add1	No					
	Add2	No					
	Add3	No					
	Mult1	Yes	MULTD		R(F4)	Load2	
	Mult2	No					

Register result status:

Clock		*F0*	*F2*	*F4*	*F6*	*F8*	*F10*	*F12*	...	*F30*
3	*FU*	Mult1	Load2		Load1					

- Note: registers names are removed ("renamed") in Reservation Stations; MULT issued
- Load1 completing; what is waiting for Load1?

Tomasulo Example Cycle 4

Instruction status:

Instruction		*j*	*k*	*Issue*	*Exec Comp*	*Write Result*
LD	F6	34+	R2	1	3	4
LD	F2	45+	R3	2	4	
MULTD	F0	F2	F4	3		
SUBD	F8	F6	F2	4		
DIVD	F10	F0	F6			
ADDD	F6	F8	F2			

	Busy	Address
Load1	No	
Load2	Yes	45+R3
Load3	No	

Reservation Stations:

Time	*Name*	*Busy*	*Op*	*S1 Vj*	*S2 Vk*	*RS Qj*	*RS Qk*
	Add1	Yes	SUBD	M(A1)			Load2
	Add2	No					
	Add3	No					
	Mult1	Yes	MULTD		R(F4)	Load2	
	Mult2	No					

Register result status:

Clock		*F0*	*F2*	*F4*	*F6*	*F8*	*F10*	*F12*	...	*F30*
4	*FU*	Mult1	Load2			Add1				

- Load2 completing; what is waiting for Load2?

Tomasulo Example Cycle 5

Instruction status:

Instruction		*j*	*k*	*Issue*	*Exec Comp*	*Write Result*
LD	F6	34+	R2	1	3	4
LD	F2	45+	R3	2	4	5
MULTD	F0	F2	F4	3		
SUBD	F8	F6	F2	4		
DIVD	F10	F0	F6	5		
ADDD	F6	F8	F2			

	Busy	Address
Load1	No	
Load2	No	
Load3	No	

Reservation Stations:

Time	*Name*	*Busy*	*Op*	*S1 Vj*	*S2 Vk*	*RS Qj*	*RS Qk*
2	Add1	Yes	SUBD	M(A1)	M(A2)		
	Add2	No					
	Add3	No					
10	Mult1	Yes	MULTD	M(A2)	R(F4)		
	Mult2	Yes	DIVD		M(A1)	Mult1	

Register result status:

Clock		*F0*	*F2*	*F4*	*F6*	*F8*	*F10*	*F12*	...	*F30*
5	*FU*	Mult1				Add1	Mult2			

- Timer starts down for Add1, Mult1

Tomasulo Example Cycle 6

Instruction status:

Instruction		*j*	*k*	*Issue*	*Exec Comp*	*Write Result*
LD	F6	34+	R2	1	3	4
LD	F2	45+	R3	2	4	5
MULTD	F0	F2	F4	3		
SUBD	F8	F6	F2	4		
DIVD	F10	F0	F6	5		
ADDD	F6	F8	F2	6		

	Busy	Address
Load1	No	
Load2	No	
Load3	No	

Reservation Stations:

Time	*Name*	*Busy*	*Op*	*S1 Vj*	*S2 Vk*	*RS Qj*	*RS Qk*
1	Add1	Yes	SUBD	M(A1)	M(A2)		
	Add2	Yes	ADDD		M(A2)	Add1	
	Add3	No					
9	Mult1	Yes	MULTD	M(A2)	R(F4)		
	Mult2	Yes	DIVD		M(A1)	Mult1	

Register result status:

Clock		*F0*	*F2*	*F4*	*F6*	*F8*	*F10*	*F12*	...	*F30*
6	*FU*	Mult1			Add2	Add1	Mult2			

- Issue ADDD here despite name dependency on F6?

Tomasulo Example Cycle 7

Instruction status:

Instruction		*j*	*k*	*Issue*	*Exec Comp*	*Write Result*
LD	F6	34+	R2	1	3	4
LD	F2	45+	R3	2	4	5
MULTD	F0	F2	F4	3		
SUBD	F8	F6	F2	4	7	
DIVD	F10	F0	F6	5		
ADDD	F6	F8	F2	6		

	Busy	Address
Load1	No	
Load2	No	
Load3	No	

Reservation Stations:

Time	*Name*	*Busy*	*Op*	*S1 Vj*	*S2 Vk*	*RS Qj*	*RS Qk*
0	Add1	Yes	SUBD	M(A1)	M(A2)		
	Add2	Yes	ADDD		M(A2)	Add1	
	Add3	No					
8	Mult1	Yes	MULTD	M(A2)	R(F4)		
	Mult2	Yes	DIVD		M(A1)	Mult1	

Register result status:

Clock		*F0*	*F2*	*F4*	*F6*	*F8*	*F10*	*F12*	...	*F30*
7	*FU*	Mult1			Add2	Add1	Mult2			

- Add1 (SUBD) completing; what is waiting for it?

Tomasulo Example Cycle 8

Instruction status:

Instruction		*j*	*k*	*Issue*	*Exec Comp*	*Write Result*
LD	F6	34+	R2	1	3	4
LD	F2	45+	R3	2	4	5
MULTD	F0	F2	F4	3		
SUBD	F8	F6	F2	4	7	8
DIVD	F10	F0	F6	5		
ADDD	F6	F8	F2	6		

	Busy	Address
Load1	No	
Load2	No	
Load3	No	

Reservation Stations:

Time	*Name*	*Busy*	*Op*	*S1 Vj*	*S2 Vk*	*RS Qj*	*RS Qk*
	Add1	No					
2	Add2	Yes	ADDD	(M-M)	M(A2)		
	Add3	No					
7	Mult1	Yes	MULTD	M(A2)	R(F4)		
	Mult2	Yes	DIVD		M(A1)	Mult1	

Register result status:

Clock		*F0*	*F2*	*F4*	*F6*	*F8*	*F10*	*F12*	...	*F30*
8	*FU*	Mult1			Add2		Mult2			

Tomasulo Example Cycle 9

Instruction status:

Instruction		*j*	*k*	*Issue*	*Exec Comp*	*Write Result*
LD	F6	34+	R2	1	3	4
LD	F2	45+	R3	2	4	5
MULTD	F0	F2	F4	3		
SUBD	F8	F6	F2	4	7	8
DIVD	F10	F0	F6	5		
ADDD	F6	F8	F2	6		

	Busy	Address
Load1	No	
Load2	No	
Load3	No	

Reservation Stations:

Time	*Name*	*Busy*	*Op*	*S1 Vj*	*S2 Vk*	*RS Qj*	*RS Qk*
	Add1	No					
1	Add2	Yes	ADDD	(M-M)	M(A2)		
	Add3	No					
6	Mult1	Yes	MULTD	M(A2)	R(F4)		
	Mult2	Yes	DIVD		M(A1)	Mult1	

Register result status:

Clock		*F0*	*F2*	*F4*	*F6*	*F8*	*F10*	*F12*	...	*F30*
9	*FU*	Mult1			Add2		Mult2			

Tomasulo Example Cycle 10

Instruction status:

Instruction		*j*	*k*	*Issue*	*Exec Comp*	*Write Result*
LD	F6	34+	R2	1	3	4
LD	F2	45+	R3	2	4	5
MULTD	F0	F2	F4	3		
SUBD	F8	F6	F2	4	7	8
DIVD	F10	F0	F6	5		
ADDD	F6	F8	F2	6	10	

	Busy	Address
Load1	No	
Load2	No	
Load3	No	

Reservation Stations:

Time	*Name*	*Busy*	*Op*	*S1 Vj*	*S2 Vk*	*RS Qj*	*RS Qk*
	Add1	No					
0	Add2	Yes	ADDD	(M-M)	M(A2)		
	Add3	No					
5	Mult1	Yes	MULTD	M(A2)	R(F4)		
	Mult2	Yes	DIVD		M(A1)	Mult1	

Register result status:

Clock		*F0*	*F2*	*F4*	*F6*	*F8*	*F10*	*F12*	...	*F30*
10	*FU*	Mult1			Add2		Mult2			

- Add2 (ADDD) completing; what is waiting for it?

Tomasulo Example Cycle 11

Instruction status:

Instruction		*j*	*k*	*Issue*	*Exec Comp*	*Write Result*
LD	F6	34+	R2	1	3	4
LD	F2	45+	R3	2	4	5
MULTD	F0	F2	F4	3		
SUBD	F8	F6	F2	4	7	8
DIVD	F10	F0	F6	5		
ADDD	F6	F8	F2	6	10	11

	Busy	Address
Load1	No	
Load2	No	
Load3	No	

Reservation Stations:

Time	*Name*	*Busy*	*Op*	*S1 Vj*	*S2 Vk*	*RS Qj*	*RS Qk*
	Add1	No					
	Add2	No					
	Add3	No					
4	Mult1	Yes	MULTD	M(A2)	R(F4)		
	Mult2	Yes	DIVD		M(A1)	Mult1	

Register result status:

Clock		*F0*	*F2*	*F4*	*F6*	*F8*	*F10*	*F12*	...	*F30*
11	*FU*	Mult1					Mult2			

- Write result of ADDD here?
- All quick instructions complete in this cycle!

Tomasulo Example Cycle 12

Instruction status:

Instruction		*j*	*k*	*Issue*	*Exec Comp*	*Write Result*
LD	F6	34+	R2	1	3	4
LD	F2	45+	R3	2	4	5
MULTD	F0	F2	F4	3		
SUBD	F8	F6	F2	4	7	8
DIVD	F10	F0	F6	5		
ADDD	F6	F8	F2	6	10	11

	Busy	Address
Load1	No	
Load2	No	
Load3	No	

Reservation Stations:

Time	*Name*	*Busy*	*Op*	*S1 Vj*	*S2 Vk*	*RS Qj*	*RS Qk*
	Add1	No					
	Add2	No					
	Add3	No					
3	Mult1	Yes	MULTD	M(A2)	R(F4)		
	Mult2	Yes	DIVD		M(A1)	Mult1	

Register result status:

Clock		*F0*	*F2*	*F4*	*F6*	*F8*	*F10*	*F12*	...	*F30*
12	*FU*	Mult1					Mult2			

Tomasulo Example Cycle 13

Instruction status:

Instruction		*j*	*k*	*Issue*	*Exec Comp*	*Write Result*
LD	F6	34+	R2	1	3	4
LD	F2	45+	R3	2	4	5
MULTD	F0	F2	F4	3		
SUBD	F8	F6	F2	4	7	8
DIVD	F10	F0	F6	5		
ADDD	F6	F8	F2	6	10	11

	Busy	Address
Load1	No	
Load2	No	
Load3	No	

Reservation Stations:

Time	*Name*	*Busy*	*Op*	*S1 Vj*	*S2 Vk*	*RS Qj*	*RS Qk*
	Add1	No					
	Add2	No					
	Add3	No					
2	Mult1	Yes	MULTD	M(A2)	R(F4)		
	Mult2	Yes	DIVD		M(A1)	Mult1	

Register result status:

Clock		*F0*	*F2*	*F4*	*F6*	*F8*	*F10*	*F12*	...	*F30*
13	*FU*	Mult1					Mult2			

Tomasulo Example Cycle 14

Instruction status:

Instruction		*j*	*k*	*Issue*	*Exec Comp*	*Write Result*
LD	F6	34+	R2	1	3	4
LD	F2	45+	R3	2	4	5
MULTD	F0	F2	F4	3		
SUBD	F8	F6	F2	4	7	8
DIVD	F10	F0	F6	5		
ADDD	F6	F8	F2	6	10	11

	Busy	Address
Load1	No	
Load2	No	
Load3	No	

Reservation Stations:

Time	*Name*	*Busy*	*Op*	*S1 Vj*	*S2 Vk*	*RS Qj*	*RS Qk*
	Add1	No					
	Add2	No					
	Add3	No					
1	Mult1	Yes	MULTD	M(A2)	R(F4)		
	Mult2	Yes	DIVD		M(A1)	Mult1	

Register result status:

Clock		*F0*	*F2*	*F4*	*F6*	*F8*	*F10*	*F12*	...	*F30*
14	*FU*	Mult1					Mult2			

Tomasulo Example Cycle 15

Instruction status:

Instruction		*j*	*k*	*Issue*	*Exec Comp*	*Write Result*
LD	F6	34+	R2	1	3	4
LD	F2	45+	R3	2	4	5
MULTD	F0	F2	F4	3	15	
SUBD	F8	F6	F2	4	7	8
DIVD	F10	F0	F6	5		
ADDD	F6	F8	F2	6	10	11

	Busy	Address
Load1	No	
Load2	No	
Load3	No	

Reservation Stations:

Time	*Name*	*Busy*	*Op*	*S1 Vj*	*S2 Vk*	*RS Qj*	*RS Qk*
	Add1	No					
	Add2	No					
	Add3	No					
0	Mult1	Yes	MULTD	M(A2)	R(F4)		
	Mult2	Yes	DIVD		M(A1)	Mult1	

Register result status:

Clock		*F0*	*F2*	*F4*	*F6*	*F8*	*F10*	*F12*	...	*F30*
15	*FU*	Mult1					Mult2			

- Mult1 (MULTD) completing; what is waiting for it?

Tomasulo Example Cycle 16

Instruction status:

Instruction		*j*	*k*	*Issue*	*Exec Comp*	*Write Result*
LD	F6	34+	R2	1	3	4
LD	F2	45+	R3	2	4	5
MULTD	F0	F2	F4	3	15	16
SUBD	F8	F6	F2	4	7	8
DIVD	F10	F0	F6	5		
ADDD	F6	F8	F2	6	10	11

	Busy	Address
Load1	No	
Load2	No	
Load3	No	

Reservation Stations:

Time	*Name*	*Busy*	*Op*	*S1 Vj*	*S2 Vk*	*RS Qj*	*RS Qk*
	Add1	No					
	Add2	No					
	Add3	No					
	Mult1	No					
40	Mult2	Yes	DIVD	M*F4	M(A1)		

Register result status:

Clock		*F0*	*F2*	*F4*	*F6*	*F8*	*F10*	*F12*	...	*F30*
16	*FU*						Mult2			

- Just waiting for Mult2 (DIVD) to complete

Tomasulo Example Cycle 55

Instruction status:

Instruction		*j*	*k*	*Issue*	*Exec Comp*	*Write Result*
LD	F6	34+	R2	1	3	4
LD	F2	45+	R3	2	4	5
MULTD	F0	F2	F4	3	15	16
SUBD	F8	F6	F2	4	7	8
DIVD	F10	F0	F6	5		
ADDD	F6	F8	F2	6	10	11

	Busy	Address
Load1	No	
Load2	No	
Load3	No	

Reservation Stations:

Time	*Name*	*Busy*	*Op*	*S1 Vj*	*S2 Vk*	*RS Qj*	*RS Qk*
	Add1	No					
	Add2	No					
	Add3	No					
	Mult1	No					
1	Mult2	Yes	DIVD	M*F4	M(A1)		

Register result status:

Clock		*F0*	*F2*	*F4*	*F6*	*F8*	*F10*	*F12*	...	*F30*
55	*FU*						Mult2			

Tomasulo Example Cycle 56

Instruction status:

Instruction		*j*	*k*	*Issue*	*Exec Comp*	*Write Result*
LD	F6	34+	R2	1	3	4
LD	F2	45+	R3	2	4	5
MULTD	F0	F2	F4	3	15	16
SUBD	F8	F6	F2	4	7	8
DIVD	F10	F0	F6	5	56	
ADDD	F6	F8	F2	6	10	11

	Busy	Address
Load1	No	
Load2	No	
Load3	No	

Reservation Stations:

Time	*Name*	*Busy*	*Op*	*S1 Vj*	*S2 Vk*	*RS Qj*	*RS Qk*
	Add1	No					
	Add2	No					
	Add3	No					
	Mult1	No					
0	Mult2	Yes	DIVD	M*F4	M(A1)		

Register result status:

Clock		*F0*	*F2*	*F4*	*F6*	*F8*	*F10*	*F12*	...	*F30*
56	*FU*						Mult2			

- **Mult2 (DIVD) is completing; what is waiting for it?**

Tomasulo Example Cycle 57

Instruction status:

Instruction		*j*	*k*	*Issue*	*Exec Comp*	*Write Result*
LD	F6	34+	R2	1	3	4
LD	F2	45+	R3	2	4	5
MULTD	F0	F2	F4	3	15	16
SUBD	F8	F6	F2	4	7	8
DIVD	F10	F0	F6	5	56	57
ADDD	F6	F8	F2	6	10	11

	Busy	Address
Load1	No	
Load2	No	
Load3	No	

Reservation Stations:

Time	*Name*	*Busy*	*Op*	*S1 Vj*	*S2 Vk*	*RS Qj*	*RS Qk*
	Add1	No					
	Add2	No					
	Add3	No					
	Mult1	No					
	Mult2	Yes	DIVD	M*F4	M(A1)		

Register result status:

Clock		*F0*	*F2*	*F4*	*F6*	*F8*	*F10*	*F12*	...	*F30*
56	*FU*									

- Once again: In-order issue, out-of-order execution and out-of-order completion.

Tomasulo Drawbacks

- **Complexity**
  - **delays of 360/91, MIPS 10000, Alpha 21264, IBM PPC 620 in CA: AQA 2/e**
- **Many associative stores (CDB) at high speed**
- **Performance limited by Common Data Bus**
  - **Each CDB must go to multiple functional units ⇒ high capacitance, high wiring density**
  - **Number of functional units that can complete per cycle limited to one!**
    - Multiple CDBs ⇒ more FU logic for parallel assoc stores
- **Non-precise interrupts! （at that time!）**

Tomasulo Loop Example

```
Loop: LD     F0     0(R1)
      MULTD  F4     F0     F2
      SD     F4     0      R1
      SUBI   R1     R1     #8
      BNEZ   R1     Loop
```

- This time assume Multiply takes 4 clocks
- Assume 1st load takes 8 clocks (L1 cache miss), 2nd load takes 1 clock (hit)
- To be clear, will show clocks for SUBI, BNEZ
  - Reality: integer instructions ahead of Fl. Pt. Instructions
- Show 2 iterations

Loop Example

Instruction status:

ITER	Instruction		*j*	*k*	*Issue*	*Exec Comp*	*Write Result*
1	LD	F0	0	R1			
1	MULTD	F4	F0	F2			
1	SD	F4	0	R1			
2	LD	F0	0	R1			
2	MULTD	F4	F0	F2			
2	SD	F4	0	R1			

Iter-ation Count

	Busy	*Addr*	*Fu*
Load1	No		
Load2	No		
Load3	No		
Store1	No		
Store2	No		
Store3	No		

Added Store Buffers

Reservation Stations:

Time	*Name*	*Busy*	*Op*	*Vj*	*S1 Vk*	*S2 Qj*	*RS Qk*
	Add1	No					
	Add2	No					
	Add3	No					
	Mult1	No					
	Mult2	No					

Code:

LD	F0	0	R1
MULTD	F4	F0	F2
SD	F4	0	R1
SUBI	R1	R1	#8
BNEZ	R1	Loop	

Instruction Loop

Register result status

Clock	**R1**		*F0*	*F2*	*F4*	*F6*	*F8*	*F10*	*F12*	...	*F30*
0	**80**	*Fu*									

Value of Register used for address, iteration control

Loop Example Cycle 1

Instruction status:

ITER	Instruction	*j*	*k*	*Issue*	*Exec Comp*	*Write Result*
1	LD F0	0	R1	1		

	Busy	*Addr*	*Fu*
Load1	Yes	80	
Load2	No		
Load3	No		
Store1	No		
Store2	No		
Store3	No		

Reservation Stations:

Time	*Name*	*Busy*	*Op*	*Vj*	*S1 Vk*	*S2 Qj*	*RS Qk*
	Add1	No					
	Add2	No					
	Add3	No					
	Mult1	No					
	Mult2	No					

Code:

LD	F0	0	R1
MULTD	F4	F0	F2
SD	F4	0	R1
SUBI	R1	R1	#8
BNEZ	R1	Loop	

Register result status

Clock	**R1**		*F0*	*F2*	*F4*	*F6*	*F8*	*F10*	*F12*	...	*F30*
1	**80**	*Fu*	Load1								

Loop Example Cycle 2

Instruction status:

ITER	Instruction		*j*	*k*	*Issue*	*Exec Comp*	*Write Result*
1	LD	F0	0	R1	1		
1	MULTD	F4	F0	F2	2		

	Busy	*Addr*	*Fu*
Load1	Yes	80	
Load2	No		
Load3	No		
Store1	No		
Store2	No		
Store3	No		

Reservation Stations:

Time	*Name*	*Busy*	*Op*	*Vj*	*S1 Vk*	*S2 Qj*	*RS Qk*
	Add1	No					
	Add2	No					
	Add3	No					
	Mult1	Yes	Multd		R(F2)	Load1	
	Mult2	No					

Code:

LD	F0	0	R1
MULTD	F4	F0	F2
SD	F4	0	R1
SUBI	R1	R1	#8
BNEZ	R1	Loop	

Register result status

Clock	**R1**		*F0*	*F2*	*F4*	*F6*	*F8*	*F10*	*F12*	...	*F30*
2	**80**	*Fu*	Load1		Mult1						

Loop Example Cycle 3

Instruction status:

ITER	Instruction		*j*	*k*	*Issue*	*Exec Comp*	*Write Result*
1	LD	F0	0	R1	1		
1	MULTD	F4	F0	F2	2		
1	SD	F4	0	R1	3		

	Busy	*Addr*	*Fu*
Load1	Yes	80	
Load2	No		
Load3	No		
Store1	Yes	80	Mult1
Store2	No		
Store3	No		

Reservation Stations:

Time	*Name*	*Busy*	*Op*	*Vj*	*Vk*	*S1 Qj*	*S2 Qk*	*RS*
	Add1	No						
	Add2	No						
	Add3	No						
	Mult1	Yes	Multd		R(F2)	Load1		
	Mult2	No						

Code:

LD	F0	0	R1
MULTD	F4	F0	F2
SD	F4	0	R1
SUBI	R1	R1	#8
BNEZ	R1	Loop	

Register result status

Clock	**R1**		*F0*	*F2*	*F4*	*F6*	*F8*	*F10*	*F12*	*...*	*F30*
3	**80**	*Fu*	Load1		Mult1						

Implicit renaming sets up data flow graph

Loop Example Cycle 4

Instruction status:

ITER	Instruction		*j*	*k*	*Issue*	*Exec Comp*	*Write Result*
1	LD	F0	0	R1	1		
1	MULTD	F4	F0	F2	2		
1	SD	F4	0	R1	3		

	Busy	*Addr*	*Fu*
Load1	Yes	80	
Load2	No		
Load3	No		
Store1	Yes	80	Mult1
Store2	No		
Store3	No		

Reservation Stations:

Time	*Name*	*Busy*	*Op*	*Vj*	*Vk*	*S1 Qj*	*S2 Qk*	*RS*
	Add1	No						
	Add2	No						
	Add3	No						
	Mult1	Yes	Multd		R(F2)	Load1		
	Mult2	No						

Code:

LD	F0	0	R1
MULTD	F4	F0	F2
SD	F4	0	R1
SUBI	R1	R1	#8
BNEZ	R1	Loop	

Register result status

Clock	**R1**		*F0*	*F2*	*F4*	*F6*	*F8*	*F10*	*F12*	*...*	*F30*
4	**80**	*Fu*	Load1		Mult1						

Loop Example Cycle 5

Instruction status:

ITER	Instruction		*j*	*k*	*Issue*	*Exec Comp*	*Write Result*
1	LD	F0	0	R1	1		
1	MULTD	F4	F0	F2	2		
1	SD	F4	0	R1	3		

	Busy	*Addr*	*Fu*
Load1	Yes	80	
Load2	No		
Load3	No		
Store1	Yes	80	Mult1
Store2	No		
Store3	No		

Reservation Stations:

Time	*Name*	*Busy*	*Op*	*Vj*	*S1 Vk*	*S2 Qj*	*RS Qk*
	Add1	No					
	Add2	No					
	Add3	No					
	Mult1	Yes	Multd		R(F2)	Load1	
	Mult2	No					

Code:

LD	F0	0	R1
MULTD	F4	F0	F2
SD	F4	0	R1
SUBI	R1	R1	#8
BNEZ	R1	Loop	

Register result status

Clock	**R1**		*F0*	*F2*	*F4*	*F6*	*F8*	*F10*	*F12*	*...*	*F30*
5	**72**	*Fu*	Load1		Mult1						

Loop Example Cycle 6

Instruction status:

ITER	Instruction		*j*	*k*	*Issue*	*Exec Comp*	*Write Result*
1	LD	F0	0	R1	1		
1	MULTD	F4	F0	F2	2		
1	SD	F4	0	R1	3		
2	LD	F0	0	R1	6		

	Busy	*Addr*	*Fu*
Load1	Yes	80	
Load2	Yes	72	
Load3	No		
Store1	Yes	80	Mult1
Store2	No		
Store3	No		

Reservation Stations:

Time	*Name*	*Busy*	*Op*	*Vj*	*S1 Vk*	*S2 Qj*	*RS Qk*
	Add1	No					
	Add2	No					
	Add3	No					
	Mult1	Yes	Multd		R(F2)	Load1	
	Mult2	No					

Code:

LD	F0	0	R1
MULTD	F4	F0	F2
SD	F4	0	R1
SUBI	R1	R1	#8
BNEZ	R1	Loop	

Register result status

Clock	**R1**		*F0*	*F2*	*F4*	*F6*	*F8*	*F10*	*F12*	...	*F30*
6	**72**	*Fu*	Load2		Mult1						

Loop Example Cycle 7

Instruction status:

ITER	Instruction		*j*	*k*	*Issue*	*Exec Comp*	*Write Result*
1	LD	F0	0	R1	1		
1	MULTD	F4	F0	F2	2		
1	SD	F4	0	R1	3		
2	LD	F0	0	R1	6		
2	MULTD	F4	F0	F2	7		

	Busy	*Addr*	*Fu*
Load1	Yes	80	
Load2	Yes	72	
Load3	No		
Store1	Yes	80	Mult1
Store2	No		
Store3	No		

Reservation Stations:

Time	*Name*	*Busy*	*Op*	*Vj*	*S1 Vk*	*S2 Qj*	*RS Qk*
	Add1	No					
	Add2	No					
	Add3	No					
	Mult1	Yes	Multd		R(F2)	Load1	
	Mult2	Yes	Multd		R(F2)	Load2	

Code:

LD	F0	0	R1
MULTD	F4	F0	F2
SD	F4	0	R1
SUBI	R1	R1	#8
BNEZ	R1	Loop	

Register result status

Clock	**R1**		*F0*	*F2*	*F4*	*F6*	*F8*	*F10*	*F12*	...	*F30*
7	**72**	*Fu*	Load2		Mult2						

Loop Example Cycle 8

Instruction status:

ITER	Instruction		*j*	*k*	*Issue*	*Exec Comp*	*Write Result*
1	LD	F0	0	R1	1		
1	MULTD	F4	F0	F2	2		
1	SD	F4	0	R1	3		
2	LD	F0	0	R1	6		
2	MULTD	F4	F0	F2	7		
2	SD	F4	0	R1	8		

	Busy	*Addr*	*Fu*
Load1	Yes	80	
Load2	Yes	72	
Load3	No		
Store1	Yes	80	Mult1
Store2	Yes	72	Mult2
Store3	No		

Reservation Stations:

Time	*Name*	*Busy*	*Op*	*Vj*	*S1 Vk*	*S2 Qj*	*RS Qk*
	Add1	No					
	Add2	No					
	Add3	No					
	Mult1	Yes	Multd		R(F2)	Load1	
	Mult2	Yes	Multd		R(F2)	Load2	

Code:

LD	F0	0	R1
MULTD	F4	F0	F2
SD	F4	0	R1
SUBI	R1	R1	#8
BNEZ	R1	Loop	

Register result status

Clock	**R1**		*F0*	*F2*	*F4*	*F6*	*F8*	*F10*	*F12*	*...*	*F30*
8	**72**	*Fu*	Load2		Mult2						

Loop Example Cycle 9

Instruction status:

ITER	Instruction		*j*	*k*	*Issue*	*Exec Comp*	*Write Result*
1	LD	F0	0	R1	1	9	
1	MULTD	F4	F0	F2	2		
1	SD	F4	0	R1	3		
2	LD	F0	0	R1	6		
2	MULTD	F4	F0	F2	7		
2	SD	F4	0	R1	8		

	Busy	*Addr*	*Fu*
Load1	Yes	80	
Load2	Yes	72	
Load3	No		
Store1	Yes	80	Mult1
Store2	Yes	72	Mult2
Store3	No		

Reservation Stations:

Time	*Name*	*Busy*	*Op*	*Vj*	*S1 Vk*	*S2 Qj*	*RS Qk*
	Add1	No					
	Add2	No					
	Add3	No					
	Mult1	Yes	Multd		R(F2)	Load1	
	Mult2	Yes	Multd		R(F2)	Load2	

Code:

LD	F0	0	R1
MULTD	F4	F0	F2
SD	F4	0	R1
SUBI	R1	R1	#8
BNEZ	R1	Loop	

Register result status

Clock	**R1**		*F0*	*F2*	*F4*	*F6*	*F8*	*F10*	*F12*	*...*	*F30*
9	**72**	*Fu*	Load2		Mult2						

Loop Example Cycle 10

Instruction status:

ITER	Instruction		*j*	*k*	*Issue*	*Exec Comp*	*Write Result*
1	LD	F0	0	R1	1	9	10
1	MULTD	F4	F0	F2	2		
1	SD	F4	0	R1	3		
2	LD	F0	0	R1	6	10	
2	MULTD	F4	F0	F2	7		
2	SD	F4	0	R1	8		

	Busy	*Addr*	*Fu*
Load1	No		
Load2	Yes	72	
Load3	No		
Store1	Yes	80	Mult1
Store2	Yes	72	Mult2
Store3	No		

Reservation Stations:

Time	*Name*	*Busy*	*Op*	*Vj*	*S1 Vk*	*S2 Qj*	*RS Qk*
	Add1	No					
	Add2	No					
	Add3	No					
4	Mult1	Yes	Multd	M[80]	R(F2)		
	Mult2	Yes	Multd		R(F2)	Load2	

Code:

LD	F0	0	R1
MULTD	F4	F0	F2
SD	F4	0	R1
SUBI	R1	R1	#8
BNEZ	R1	Loop	

Register result status

Clock	**R1**		*F0*	*F2*	*F4*	*F6*	*F8*	*F10*	*F12*	*...*	*F30*
10	**64**	*Fu*	Load2		Mult2						

Loop Example Cycle 11

Instruction status:

ITER	Instruction		*j*	*k*	*Issue*	*Exec Comp*	*Write Result*
1	LD	F0	0	R1	1	9	10
1	MULTD	F4	F0	F2	2		
1	SD	F4	0	R1	3		
2	LD	F0	0	R1	6	10	11
2	MULTD	F4	F0	F2	7		
2	SD	F4	0	R1	8		

	Busy	*Addr*	*Fu*
Load1	No		
Load2	No		
Load3	Yes	64	
Store1	Yes	80	Mult1
Store2	Yes	72	Mult2
Store3	No		

Reservation Stations:

Time	*Name*	*Busy*	*Op*	*Vj*	*S1 Vk*	*Vk*	*S2 Qj*	*Qj*	*RS Qk*	*Qk*
	Add1	No								
	Add2	No								
	Add3	No								
3	Mult1	Yes	Multd	M[80]		R(F2)				
4	Mult2	Yes	Multd	M[72]		R(F2)				

Code:

LD	F0	0	R1
MULTD	F4	F0	F2
SD	F4	0	R1
SUBI	R1	R1	#8
BNEZ	R1	Loop	

Register result status

Clock	**R1**		*F0*	*F2*	*F4*	*F6*	*F8*	*F10*	*F12*	...	*F30*
11	**64**	*Fu*	Load3		Mult2						

Loop Example Cycle 12

Instruction status:

ITER	Instruction		*j*	*k*	*Issue*	*Exec Comp*	*Write Result*
1	LD	F0	0	R1	1	9	10
1	MULTD	F4	F0	F2	2		
1	SD	F4	0	R1	3		
2	LD	F0	0	R1	6	10	11
2	MULTD	F4	F0	F2	7		
2	SD	F4	0	R1	8		

	Busy	*Addr*	*Fu*
Load1	No		
Load2	No		
Load3	Yes	64	
Store1	Yes	80	Mult1
Store2	Yes	72	Mult2
Store3	No		

Reservation Stations:

Time	*Name*	*Busy*	*Op*	*Vj*	*S1 Vk*	*S2 Qj*	*RS Qk*
	Add1	No					
	Add2	No					
	Add3	No					
2	Mult1	Yes	Multd	M[80]	R(F2)		
3	Mult2	Yes	Multd	M[72]	R(F2)		

Code:

LD	F0	0	R1
MULTD	F4	F0	F2
SD	F4	0	R1
SUBI	R1	R1	#8
BNEZ	R1	Loop	

Register result status

Clock	**R1**		*F0*	*F2*	*F4*	*F6*	*F8*	*F10*	*F12*	...	*F30*
12	**64**	*Fu*	Load3		Mult2						

Loop Example Cycle 13

Instruction status:

ITER	Instruction		*j*	*k*	*Issue*	*Exec Comp*	*Write Result*
1	LD	F0	0	R1	1	9	10
1	MULTD	F4	F0	F2	2		
1	SD	F4	0	R1	3		
2	LD	F0	0	R1	6	10	11
2	MULTD	F4	F0	F2	7		
2	SD	F4	0	R1	8		

	Busy	*Addr*	*Fu*
Load1	No		
Load2	No		
Load3	Yes	64	
Store1	Yes	80	Mult1
Store2	Yes	72	Mult2
Store3	No		

Reservation Stations:

Time	*Name*	*Busy*	*Op*	*Vj*	*S1 Vk*	*S2 Qj*	*RS Qk*
	Add1	No					
	Add2	No					
	Add3	No					
1	Mult1	Yes	Multd	M[80]	R(F2)		
2	Mult2	Yes	Multd	M[72]	R(F2)		

Code:

LD	F0	0	R1
MULTD	F4	F0	F2
SD	F4	0	R1
SUBI	R1	R1	#8
BNEZ	R1	Loop	

Register result status

Clock	**R1**		*F0*	*F2*	*F4*	*F6*	*F8*	*F10*	*F12*	...	*F30*
13	**64**	*Fu*	Load3		Mult2						

Loop Example Cycle 14

Instruction status:

ITER	Instruction		*j*	*k*	*Issue*	*Exec Comp*	*Write Result*
1	LD	F0	0	R1	1	9	10
1	MULTD	F4	F0	F2	2	14	
1	SD	F4	0	R1	3		
2	LD	F0	0	R1	6	10	11
2	MULTD	F4	F0	F2	7		
2	SD	F4	0	R1	8		

	Busy	*Addr*	*Fu*
Load1	No		
Load2	No		
Load3	Yes	64	
Store1	Yes	80	Mult1
Store2	Yes	72	Mult2
Store3	No		

Reservation Stations:

Time	*Name*	*Busy*	*Op*	*Vj*	*S1 Vk*	*S2 Qj*	*RS Qk*
	Add1	No					
	Add2	No					
	Add3	No					
0	Mult1	Yes	Multd	M[80]	R(F2)		
1	Mult2	Yes	Multd	M[72]	R(F2)		

Code:

LD	F0	0	R1
MULTD	F4	F0	F2
SD	F4	0	R1
SUBI	R1	R1	#8
BNEZ	R1	Loop	

Register result status

Clock	**R1**		*F0*	*F2*	*F4*	*F6*	*F8*	*F10*	*F12*	...	*F30*
14	**64**	*Fu*	Load3		Mult2						

Loop Example Cycle 15

Instruction status:

ITER	Instruction		*j*	*k*	*Issue*	*Exec Comp*	*Write Result*
1	LD	F0	0	R1	1	9	10
1	MULTD	F4	F0	F2	2	14	15
1	SD	F4	0	R1	3		
2	LD	F0	0	R1	6	10	11
2	MULTD	F4	F0	F2	7	15	
2	SD	F4	0	R1	8		

	Busy	*Addr*	*Fu*
Load1	No		
Load2	No		
Load3	Yes	64	
Store1	Yes	80	[80]*R2
Store2	Yes	72	Mult2
Store3	No		

Reservation Stations:

Time	*Name*	*Busy*	*Op*	*Vj*	*S1 Vk*	*S2 Qj*	*RS Qk*
	Add1	No					
	Add2	No					
	Add3	No					
	Mult1	No					
0	Mult2	Yes	Multd	M[72]	R(F2)		

Code:

LD	F0	0	R1
MULTD	F4	F0	F2
SD	F4	0	R1
SUBI	R1	R1	#8
BNEZ	R1	Loop	

Register result status

Clock	**R1**		*F0*	*F2*	*F4*	*F6*	*F8*	*F10*	*F12*	...	*F30*
15	**64**	*Fu*	Load3		Mult2						

Loop Example Cycle 16

Instruction status:

ITER	Instruction		*j*	*k*	*Issue*	*Exec Comp*	*Write Result*
1	LD	F0	0	R1	1	9	10
1	MULTD	F4	F0	F2	2	14	15
1	SD	F4	0	R1	3		
2	LD	F0	0	R1	6	10	11
2	MULTD	F4	F0	F2	7	15	16
2	SD	F4	0	R1	8		

	Busy	*Addr*	*Fu*
Load1	No		
Load2	No		
Load3	Yes	64	
Store1	Yes	80	[80]*R2
Store2	Yes	72	[72]*R2
Store3	No		

Reservation Stations:

Time	*Name*	*Busy*	*Op*	*Vj*	*S1 Vk*	*S2 Qj*	*RS Qk*
	Add1	No					
	Add2	No					
	Add3	No					
4	Mult1	Yes	Multd		R(F2)	Load3	
	Mult2	No					

Code:

LD	F0	0	R1
MULTD	F4	F0	F2
SD	F4	0	R1
SUBI	R1	R1	#8
BNEZ	R1	Loop	

Register result status

Clock	**R1**		*F0*	*F2*	*F4*	*F6*	*F8*	*F10*	*F12*	...	*F30*
16	**64**	*Fu*	Load3		Mult1						

Loop Example Cycle 17

Instruction status:

ITER	Instruction		*j*	*k*	*Issue*	*Exec Comp*	*Write Result*
1	LD	F0	0	R1	1	9	10
1	MULTD	F4	F0	F2	2	14	15
1	SD	F4	0	R1	3		
2	LD	F0	0	R1	6	10	11
2	MULTD	F4	F0	F2	7	15	16
2	SD	F4	0	R1	8		

	Busy	*Addr*	*Fu*
Load1	No		
Load2	No		
Load3	Yes	64	
Store1	Yes	80	[80]*R2
Store2	Yes	72	[72]*R2
Store3	Yes	64	Mult1

Reservation Stations:

Time	*Name*	*Busy*	*Op*	*Vj*	*S1 Vk*	*S2 Qj*	*RS Qk*
	Add1	No					
	Add2	No					
	Add3	No					
	Mult1	Yes	Multd		R(F2)	Load3	
	Mult2	No					

Code:

LD	F0	0	R1
MULTD	F4	F0	F2
SD	F4	0	R1
SUBI	R1	R1	#8
BNEZ	R1	Loop	

Register result status

Clock	**R1**		*F0*	*F2*	*F4*	*F6*	*F8*	*F10*	*F12*	...	*F30*
17	**64**	*Fu*	Load3		Mult1						

Loop Example Cycle 18

Instruction status:

ITER	Instruction		*j*	*k*	*Issue*	*Exec Comp*	*Write Result*
1	LD	F0	0	R1	1	9	10
1	MULTD	F4	F0	F2	2	14	15
1	SD	F4	0	R1	3	18	
2	LD	F0	0	R1	6	10	11
2	MULTD	F4	F0	F2	7	15	16
2	SD	F4	0	R1	8		

	Busy	*Addr*	*Fu*
Load1	No		
Load2	No		
Load3	Yes	64	
Store1	Yes	80	[80]*R2
Store2	Yes	72	[72]*R2
Store3	Yes	64	Mult1

Reservation Stations:

Time	*Name*	*Busy*	*Op*	*Vj*	*S1 Vk*	*S2 Qj*	*RS Qk*
	Add1	No					
	Add2	No					
	Add3	No					
	Mult1	Yes	Multd		R(F2)	Load3	
	Mult2	No					

Code:

LD	F0	0	R1
MULTD	F4	F0	F2
SD	F4	0	R1
SUBI	R1	R1	#8
BNEZ	R1	Loop	

Register result status

Clock	**R1**		*F0*	*F2*	*F4*	*F6*	*F8*	*F10*	*F12*	...	*F30*
18	**64**	*Fu*	Load3		Mult1						

Loop Example Cycle 19

Instruction status:

ITER	Instruction		*j*	*k*	*Issue*	*Exec Comp*	*Write Result*
1	LD	F0	0	R1	1	9	10
1	MULTD	F4	F0	F2	2	14	15
1	SD	F4	0	R1	3	18	19
2	LD	F0	0	R1	6	10	11
2	MULTD	F4	F0	F2	7	15	16
2	SD	F4	0	R1	8	19	

	Busy	*Addr*	*Fu*
Load1	No		
Load2	No		
Load3	Yes	64	
Store1	No		
Store2	Yes	72	[72]*R2
Store3	Yes	64	Mult1

Reservation Stations:

Time	*Name*	*Busy*	*Op*	*Vj*	*Vk*	*S1 Qj*	*S2 Qk*	*RS*
	Add1	No						
	Add2	No						
	Add3	No						
	Mult1	Yes	Multd		R(F2)	Load3		
	Mult2	No						

Code:

LD	F0	0	R1
MULTD	F4	F0	F2
SD	F4	0	R1
SUBI	R1	R1	#8
BNEZ	R1	Loop	

Register result status

Clock	**R1**		*F0*	*F2*	*F4*	*F6*	*F8*	*F10*	*F12*	...	*F30*
19	**56**	*Fu*	Load3		Mult1						

Loop Example Cycle 20

Instruction status:

ITER	Instruction		*j*	*k*	*Issue*	*Exec Comp*	*Write Result*
1	LD	F0	0	R1	1	9	10
1	MULTD	F4	F0	F2	2	14	15
1	SD	F4	0	R1	3	18	19
2	LD	F0	0	R1	6	10	11
2	MULTD	F4	F0	F2	7	15	16
2	SD	F4	0	R1	8	19	20

	Busy	*Addr*	*Fu*
Load1	Yes	56	
Load2	No		
Load3	Yes	64	
Store1	No		
Store2	No		
Store3	Yes	64	Mult1

Reservation Stations:

Time	*Name*	*Busy*	*Op*	*Vj*	*S1 Vk*	*S2 Qj*	*RS Qk*
	Add1	No					
	Add2	No					
	Add3	No					
	Mult1	Yes	Multd		R(F2)	Load3	
	Mult2	No					

Code:

LD	F0	0	R1
MULTD	F4	F0	F2
SD	F4	0	R1
SUBI	R1	R1	#8
BNEZ	R1	Loop	

Register result status

Clock	**R1**		*F0*	*F2*	*F4*	*F6*	*F8*	*F10*	*F12*	...	*F30*
20	**56**	*Fu*	Load1		Mult1						

- Once again: In-order issue, out-of-order execution and out-of-order completion.

为何可以覆盖循环的多轮迭代？

- **寄存器重命名**
  - 多个循环迭代使用寄存器的不同物理目标器 (dynamic loop unrolling)
- **Reservation stations**
  - 允许指令发射以推进过去的整数控制流操作
  - 同时缓存寄存器的旧值，完全避免我们在记分板中看到的WAR冲突
- **其他方面**
  - Tomasulo动态构建数据流依赖图

Tomasulo算法的2个主要优势

- **(1) 冲突检测逻辑的分布化**
  - 分布式的保留站和Common Data Bus
  - 如果多个指令等待单个相同结果，并且每个指令的其他操作数都ready，则可以通过在CDB上的广播同时启动这些指令的执行
  - 如果使用集中的寄存器文件，这些部件必须在寄存器总线可用时，才能从寄存器中读取结果。

- **(2) 消除WAW和WAR冲突导致的停顿**

总结

- Reservations stations: 将寄存器重命名到更大集合，缓冲源操作数
  - 避免寄存器成为瓶颈
  - 避免了Scoreboard中无法解决的 WAR, WAW冲突
  - 允许硬件做循环展开
- 不限于基本块(整数单元先与分支执行)
- 也有助于Cache缺失的情况
  - L1数据Cache缺失，不停顿 **(insufficient ILP for L2 miss?)**
- 贡献
  - Dynamic scheduling
  - Register renaming
  - Load/store disambiguation（存取排歧）

总结（cont’）

- 动态硬件方案可以用硬件进行循环展开
- 但如何处理精确中断?
  - Out-of-order execution =》 out-of-order completion!
- 如何处理分支?
  - 我们可以用硬件做循环展开必须可以解决分支指令问题

Thanks