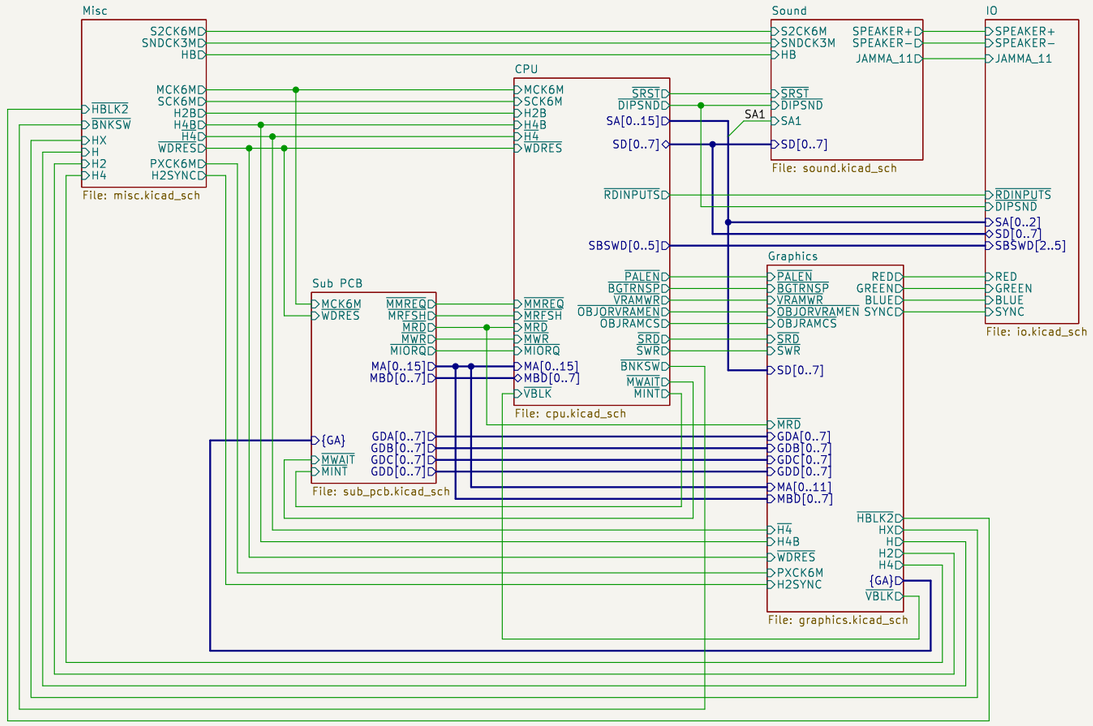

Note: The reference designator refers to the position on the PCB. If the reference designator already exists the letter is doubled. I.e. C1 -> CC1.

Ulf Skutnabba, twitter @skutis77

Sheet: /
File: tnzs.kicad_sch

Title: The NewZealand Story – P0-043A

Size: A3	Date: 2024-04-07	**Rev:**
KiCad E.D.A. 8.0.9		Id: 1/7

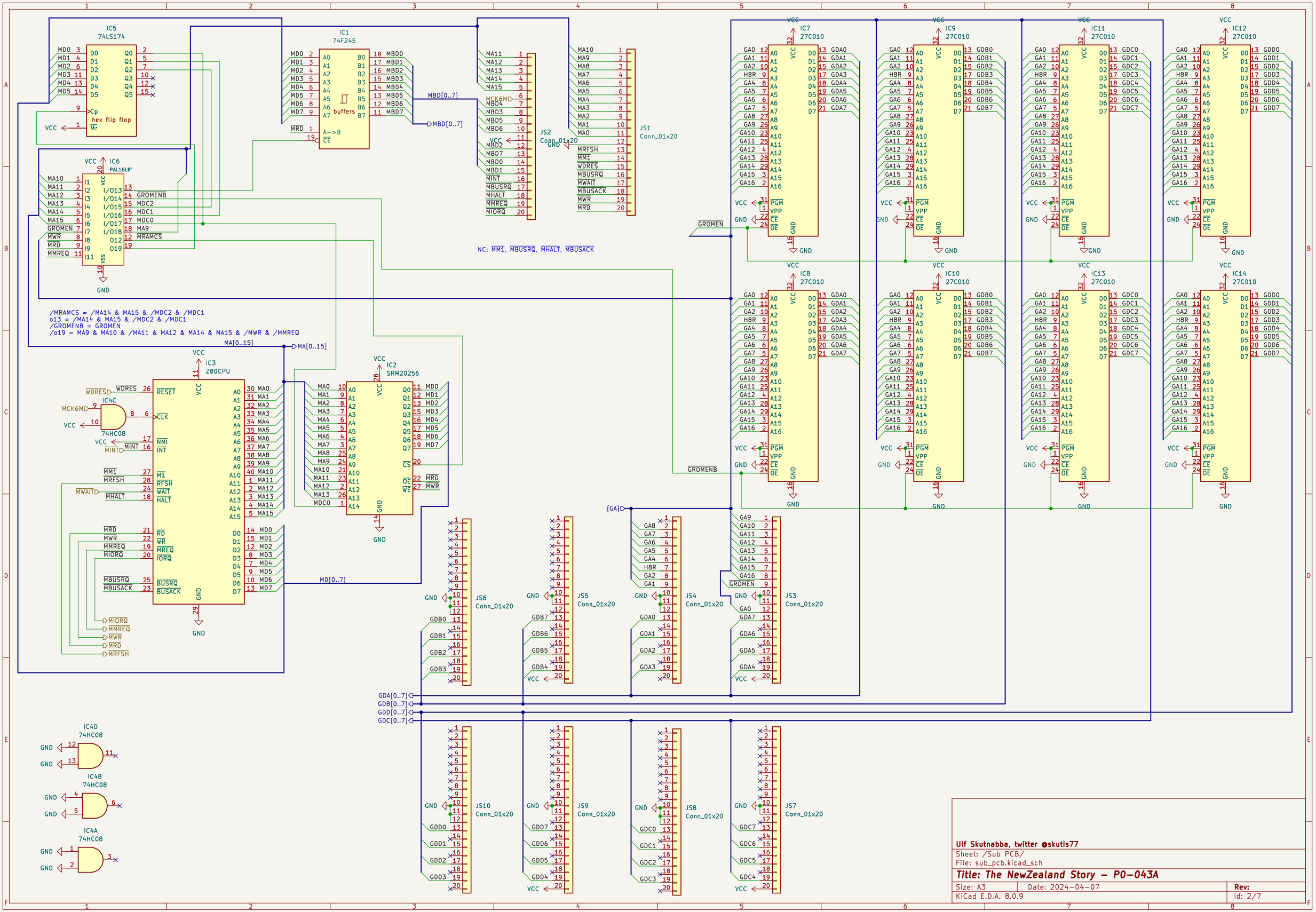
IC5
74LS174
hex flip flop
IC1
74F245
buffers
A->B
IC6
PAL16L8
IC3
Z80CPU
IC2
SRM20256
IC4C
74HC08
IC7
27C010
IC8
IC9
IC10
IC11
IC13
IC12
IC14
JS1
Conn_01x20
JS2
Conn_01x20
JS3
JS4
JS5
JS6
JS7
JS8
JS9
JS10
IC4D
IC4B
IC4A
NC: MM1, MBUSRQ, MHALT, MBUSACK
/MRAMCS = /MA14 & MA15 & /MDC2 & /MDC1
o13 = /MA14 & MA15 & /MDC2 & /MDC1
/GROMENB = GROMEN
/o19 = MA9 & MA10 & /MA11 & MA12 & MA14 & MA15 & /MWR & /MMREQ
MA[0..15]
MD[0..7]
MBD[0..7]
GDA[0..7]
GDB[0..7]
GDD[0..7]
GDC[0..7]
Ulf Skutnabba, twitter @skutis77
Sheet: /Sub PCB/
File: sub_pcb.kicad_sch
Title: The NewZealand Story – PO-043A
Size: A3
Date: 2024-04-07
KiCad E.D.A. 8.0.9
Rev:
Id: 2/7

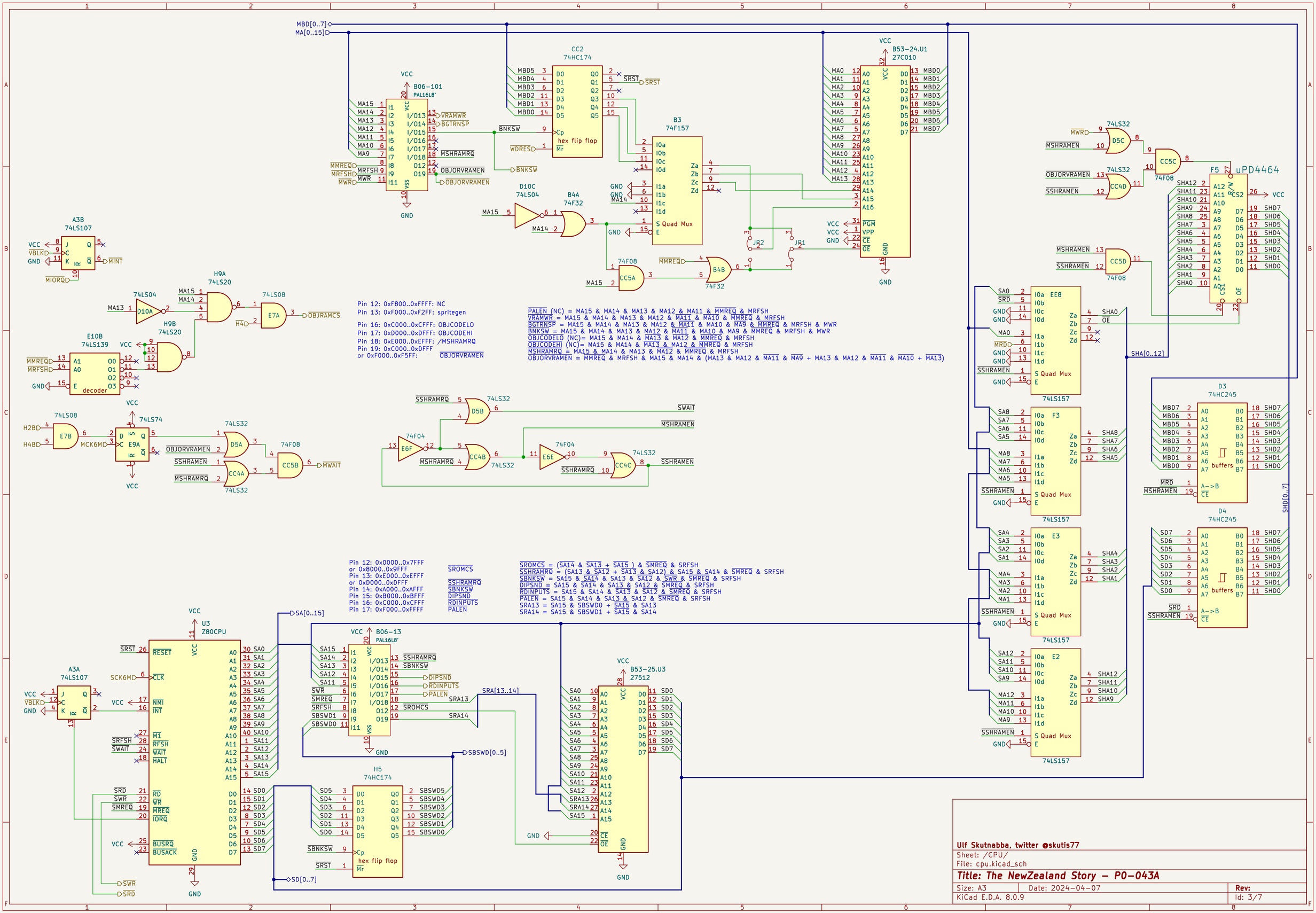
MBD[0..7]
MA[0..15]
CC2
74HC174
hex flip flop
B06-101
PAL16L8'
B3
74F157
S Quad Mux
B53-24.U1
27C010
D10C
74LS04
B4A
74F32
B4B
CC5A
74F08
A3B
74LS107
H9A
74LS20
H9B
74LS20
E7A
D10A
E10B
74LS139
decoder
E7B
74LS08
E9A
74LS74
D5A
CC4A
74LS32
CC5B
D5B
CC4B
E6F
74F04
E6E
CC4C
D5C
CC5C
CC4D
CC5D
F5
uPD4464
EE8
F3
E3
E2
D3
74HC245
buffers
D4
U3
Z80CPU
H5
74HC174
B53-25.U3
27512
Pin 12: 0xF800..0xFFFF: NC
Pin 13: 0xF000..0xF2FF: spritegen
Pin 16: 0xC000..0xCFFF: OBJCODELO
Pin 17: 0xD000..0xDFFF: OBJCODEHI
Pin 18: 0xE000..0xEFFF: /MSHRAMRQ
Pin 19: 0xC000..0xDFFF
or 0xF000..0xF5FF: OBJORVRAMEN
PALEN (NC) = MA15 & MA14 & MA13 & MA12 & MA11 & MMREQ & MRFSH
VRAMWR = MA15 & MA14 & MA13 & MA12 & MA11 & MA10 & MMREQ & MRFSH
BGTRNSP = MA15 & MA14 & MA13 & MA12 & MA11 & MA10 & MA9 & MMREQ & MRFSH & MWR
BNKSW = MA15 & MA14 & MA13 & MA12 & MA11 & MA10 & MA9 & MMREQ & MRFSH & MWR
OBJCODELO (NC)= MA15 & MA14 & MA13 & MA12 & MMREQ & MRFSH
OBJCODEHI (NC)= MA15 & MA14 & MA13 & MA12 & MMREQ & MRFSH
MSHRAMRQ = MA15 & MA14 & MA13 & MA12 & MMREQ & MRFSH
OBJORVRAMEN = MMREQ & MRFSH & MA15 & MA14 & (MA13 & MA12 & MA11 & MA9 + MA13 & MA12 & MA11 & MA10 + MA13)
Pin 12: 0x0000..0x7FFF
or 0x8000..0x9FFF
Pin 13: 0xE000..0xEFFF
or 0xD000..0xDFFF
Pin 14: 0xA000..0xAFFF
Pin 15: 0xB000..0xBFFF
Pin 16: 0xC000..0xCFFF
Pin 17: 0xF000..0xFFFF
SROMCS
SSHRAMRQ
SBNKSW
DIPSND
RDINPUTS
PALEN
SROMCS = (SA14 & SA13 + SA15) & SMREQ & SRFSH
SSHRAMRQ = (SA13 & SA12 + SA13 & SA12) & SA15 & SA14 & SMREQ & SRFSH
SBNKSW = SA15 & SA14 & SA13 & SA12 & SWR & SMREQ & SRFSH
DIPSND = SA15 & SA14 & SA13 & SA12 & SMREQ & SRFSH
RDINPUTS = SA15 & SA14 & SA13 & SA12 & SMREQ & SRFSH
PALEN = SA15 & SA14 & SA13 & SA12 & SMREQ & SRFSH
SRA13 = SA15 & SBSWD0 + SA15 & SA13
SRA14 = SA15 & SBSWD1 + SA15 & SA14
A3A
74LS107
U3
Z80CPU
B06-13
PAL16L8'
H5
74HC174
B53-25.U3
27512
SA[0..15]
SRA[13..14]
SBSWD[0..5]
SD[0..7]
SHA[0..12]
SHD[0..7]
SWAIT
MSHRAMEN
MWAIT
Ulf Skutnabba, twitter @skutis77
Sheet: /CPU/
File: cpu.kicad_sch
Title: The NewZealand Story – P0-043A
Size: A3
Date: 2024-04-07
KiCad E.D.A. 8.0.9
Rev:
Id: 3/7

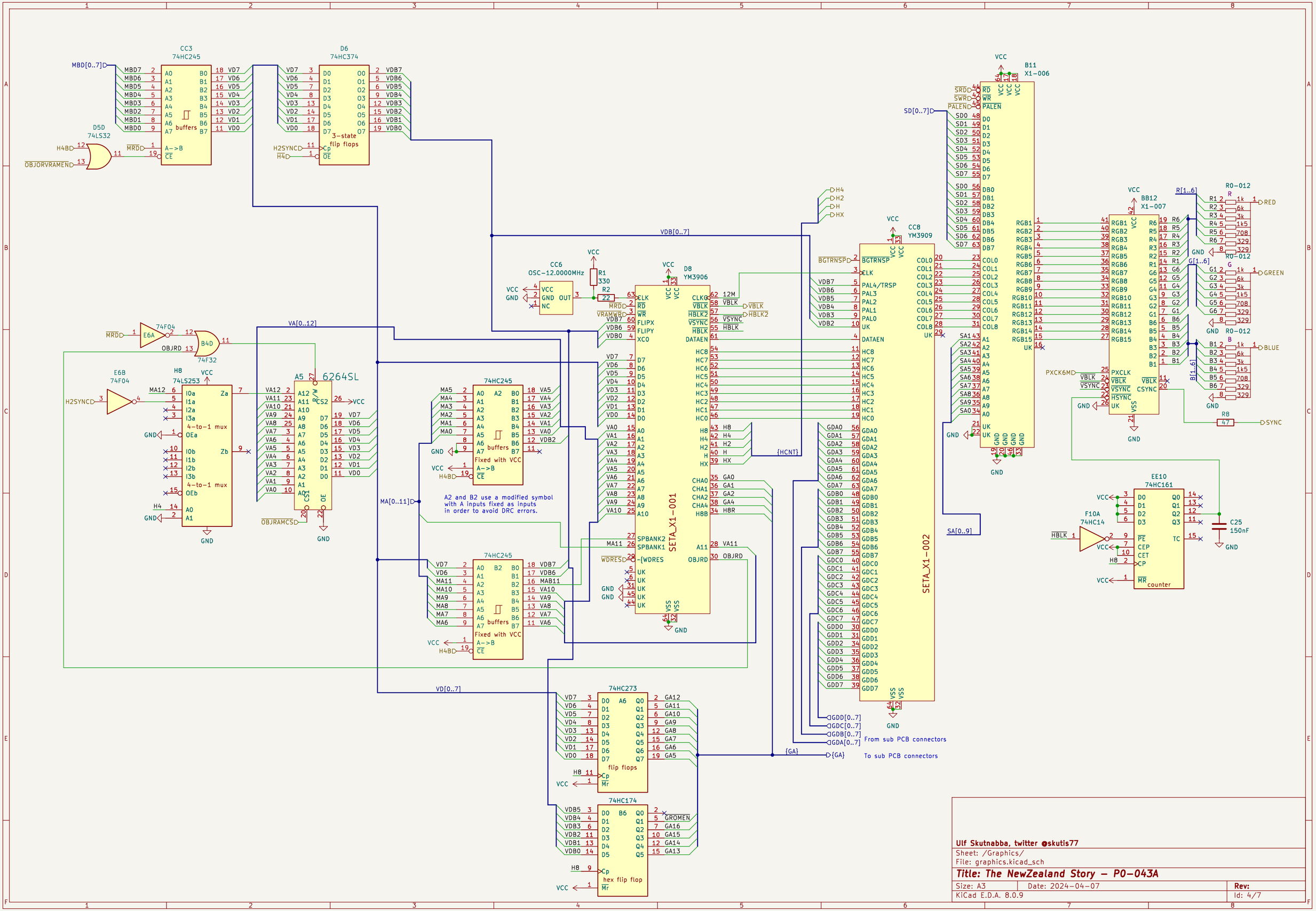

Ulf Skutnabba, twitter @skutis77

Sheet: /Graphics/

File: graphics.kicad_sch

Title: The NewZealand Story – P0-043A

Size: A3	Date: 2024-04-07	Rev:
KiCad E.D.A. 8.0.9		Id: 4/7

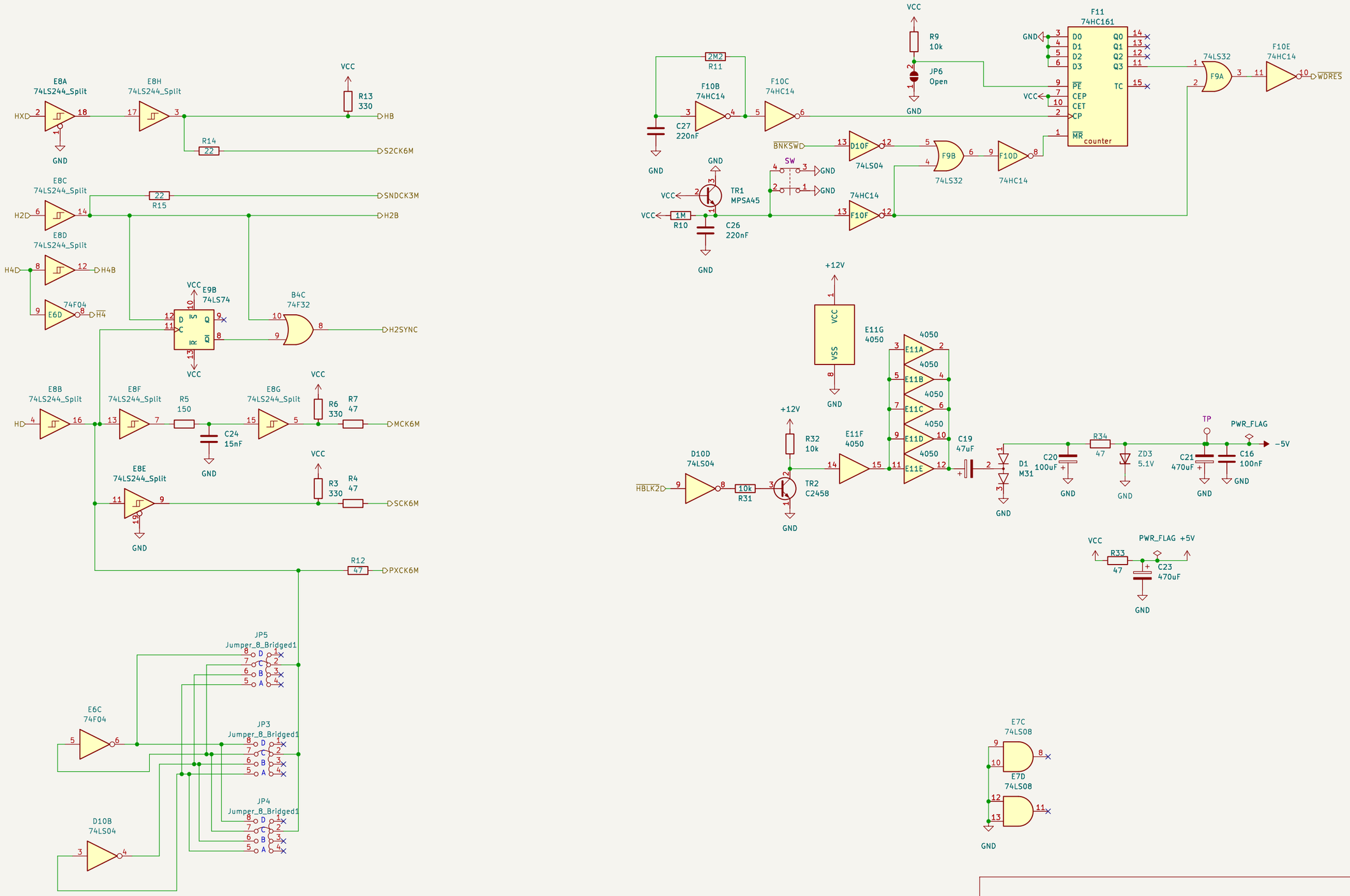

Ulf Skutnabba, twitter @skutis77

Sheet: /Misc/

File: misc.kicad_sch

Title: The NewZealand Story – P0-043A

Size: A3	Date: 2024-04-07	Rev:
KiCad E.D.A. 8.0.9		Id: 5/7

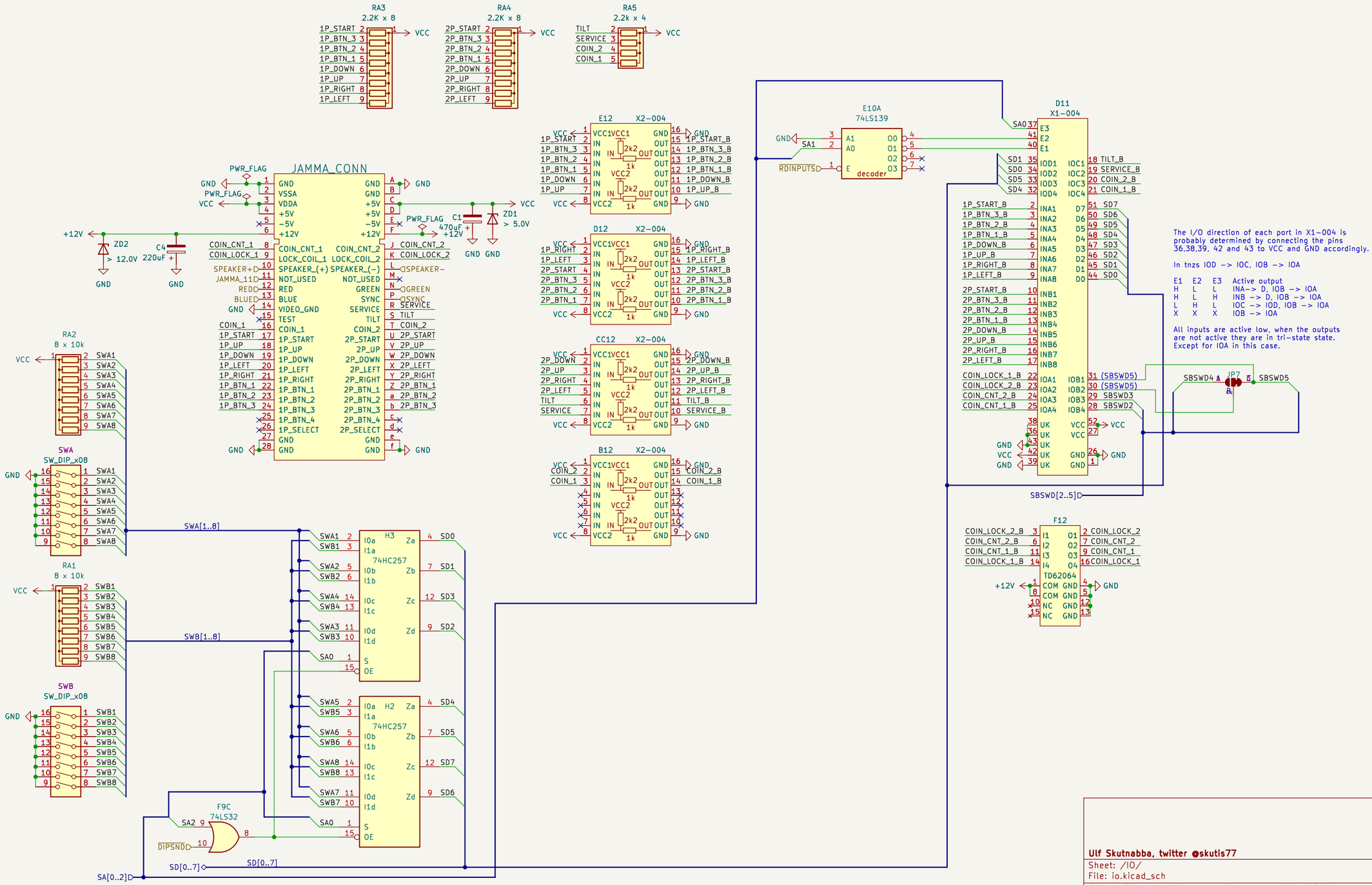

Ulf Skutnabba, twitter @skutis77

Sheet: /IO/
File: io.kicad_sch

Title: The NewZealand Story – PO-043A

Size: A3	Date: 2024-04-07	Rev:
KiCad E.D.A. 8.0.9		Id: 6/7

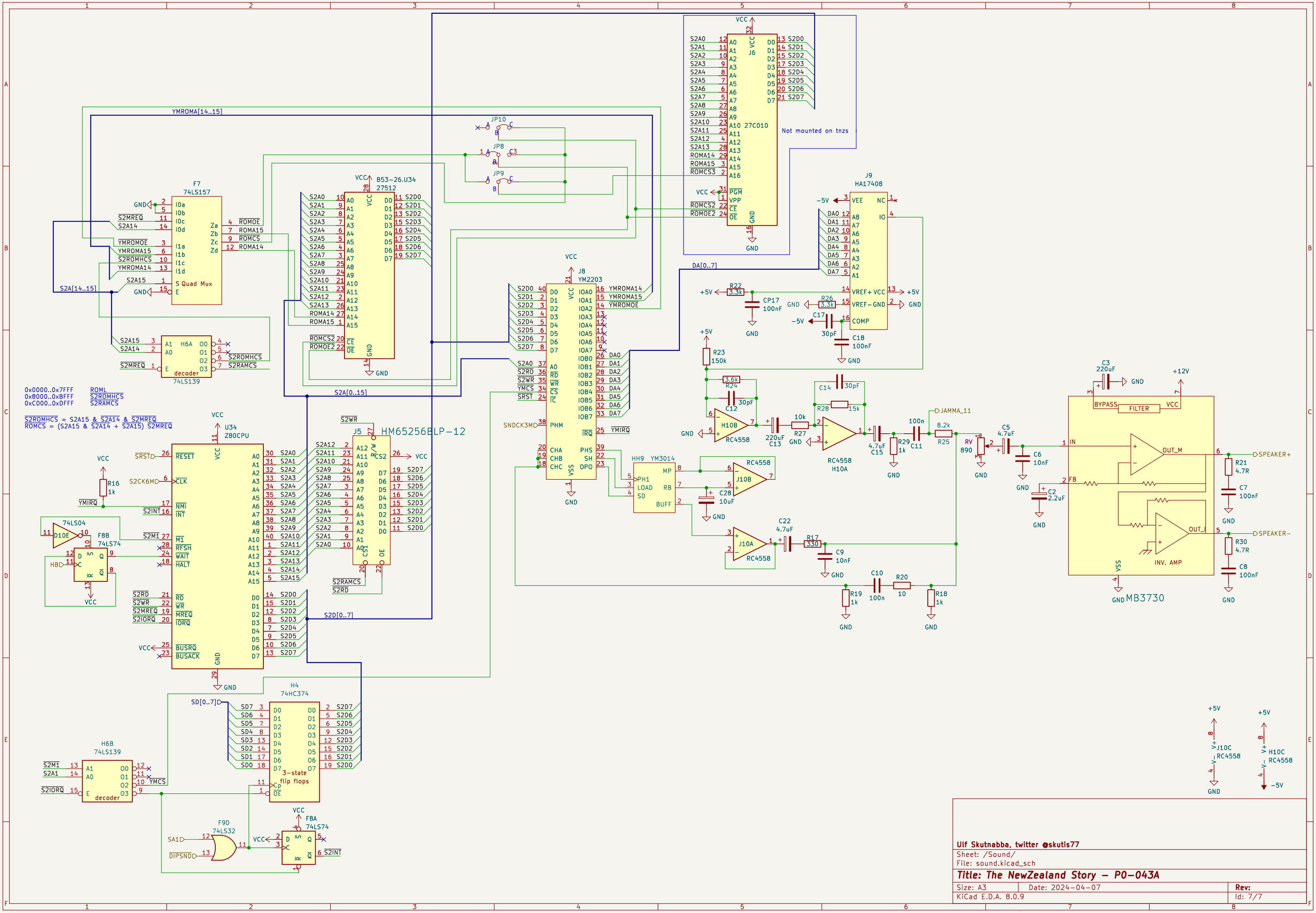
0x0000..0x7FFF ROML
0x8000..0xBFFF S2ROMHCS
0xC000..0xDFFF S2RAMCS
S2ROMHCS = S2A15 & S2A14 & S2MREQ
ROMCS = (S2A15 & S2A14 + S2A15) S2MREQ
Not mounted on tnzs
F7 74LS157
B53-26.U34 27512
J6 27C010
J9 HA17408
J8 YM2203
U34 Z80CPU
J5 HM65256BLP-12
HH9 YM3014
H6A 74LS139
H6B 74LS139
H4 74HC374
3-state flip flops
F9D 74LS32
F8A 74LS74
FBB 74LS74
D10E 74LS04
H10B RC4558
J10B RC4558
J10A RC4558
H10A RC4558
J10C RC4558
H10C RC4558
MB3730
BYPASS
FILTER
INV. AMP
SPEAKER+
SPEAKER-
JAMMA_11
YMROMA[14..15]
S2A[14..15]
S2A[0..15]
S2D[0..7]
SD[0..7]
DA[0..7]
Ulf Skutnabba, twitter @skutis77
Sheet: /Sound/
File: sound.kicad_sch
Title: The NewZealand Story – P0-043A
Size: A3
Date: 2024-04-07
Rev:
KiCad E.D.A. 8.0.9
Id: 7/7