The 007786 scans for valid object data:
– Object (sprite) code,
– palette,
– position and
– attributes

It translates it into:
– individual object character (tiles) color code,
– Palette values
– object character address

This is copied into the frame buffers with the 007786.

1. $\overline{SCLR}$ ($\overline{OSCANCLR}$) starts the obejct scanning process.
2. $\overline{OSCEN}$ is activated when each of the four words to be scanned are to be read. The 007783 increments the address.

The 007786 uses an OKI 79V000 gate cell array with 3289 unit cells.

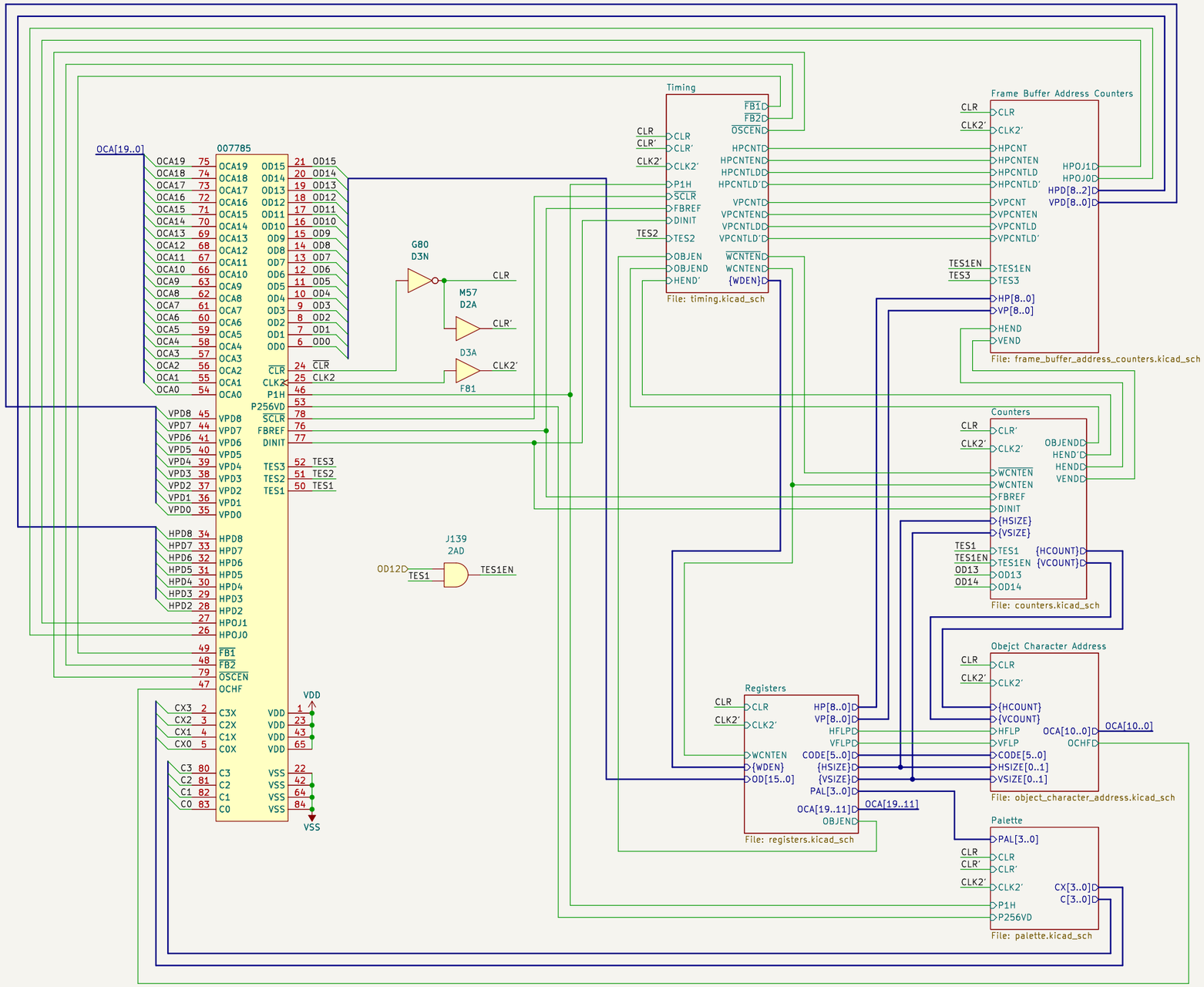

Ulf Skutnabba, twitter: @skutis77

Sheet: /
File: 007785.kicad_sch

Title: Konami 007785

Size: A3	Date: 2023-12-22	Rev:
KiCad E.D.A. 8.0.9		Id: 1/7

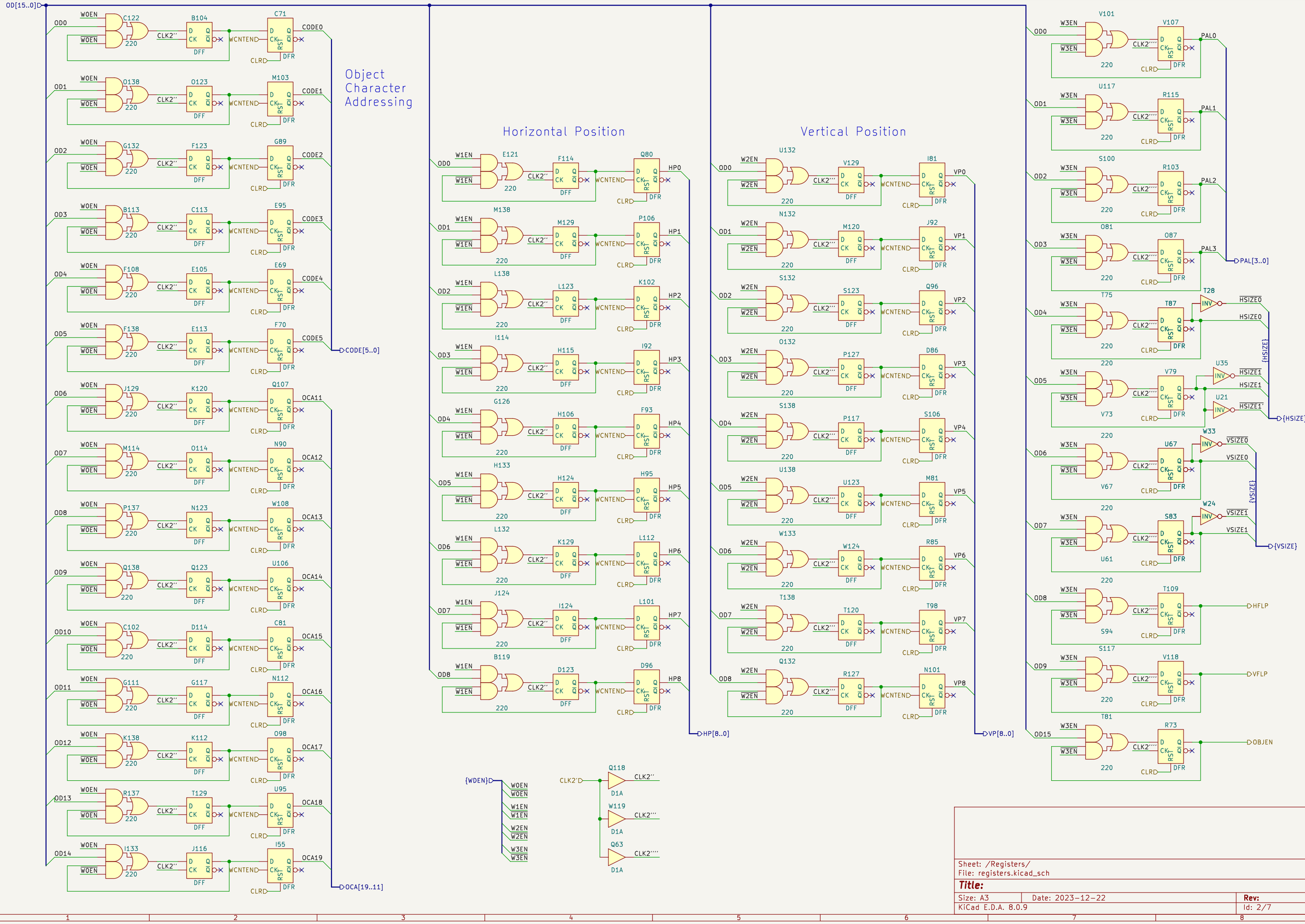

Object Character Addressing
Horizontal Position
Vertical Position
OD[15..0]
CODE[5..0]
OCA[19..11]
HP[8..0]
VP[8..0]
PAL[3..0]
{HSIZE}
{VSIZE}
HFLP
VFLP
OBJEN
{WDEN}
CLK2'
Sheet: /Registers/
File: registers.kicad_sch
Title:
Size: A3
Date: 2023-12-22
Rev:
KiCad E.D.A. 8.0.9
Id: 2/7

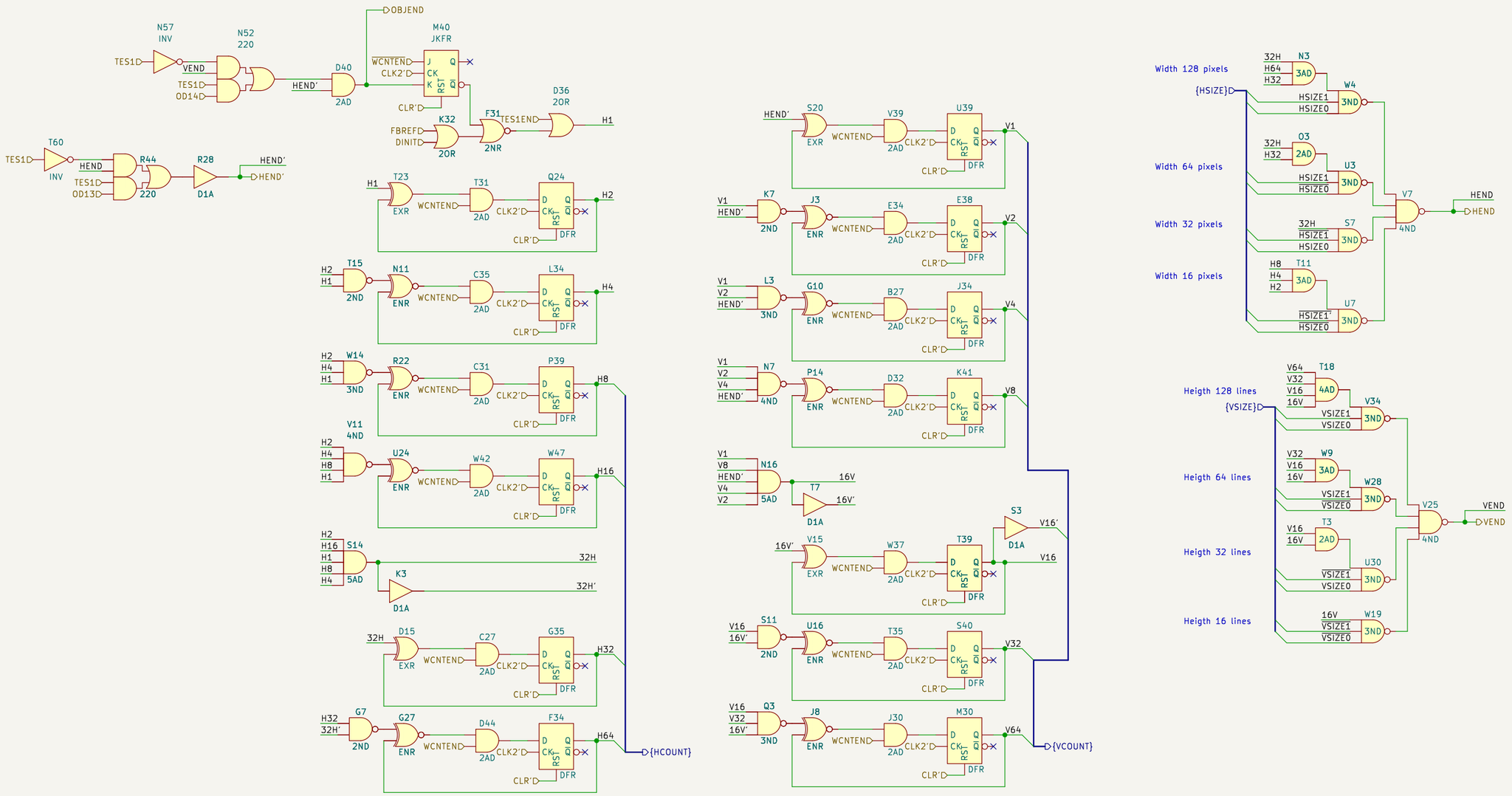

Sheet: /Counters/		
File: counters.kicad_sch		
Title:		
Size: A3	Date: 2023-12-22	**Rev:**
KiCad E.D.A. 8.0.9		Id: 3/7

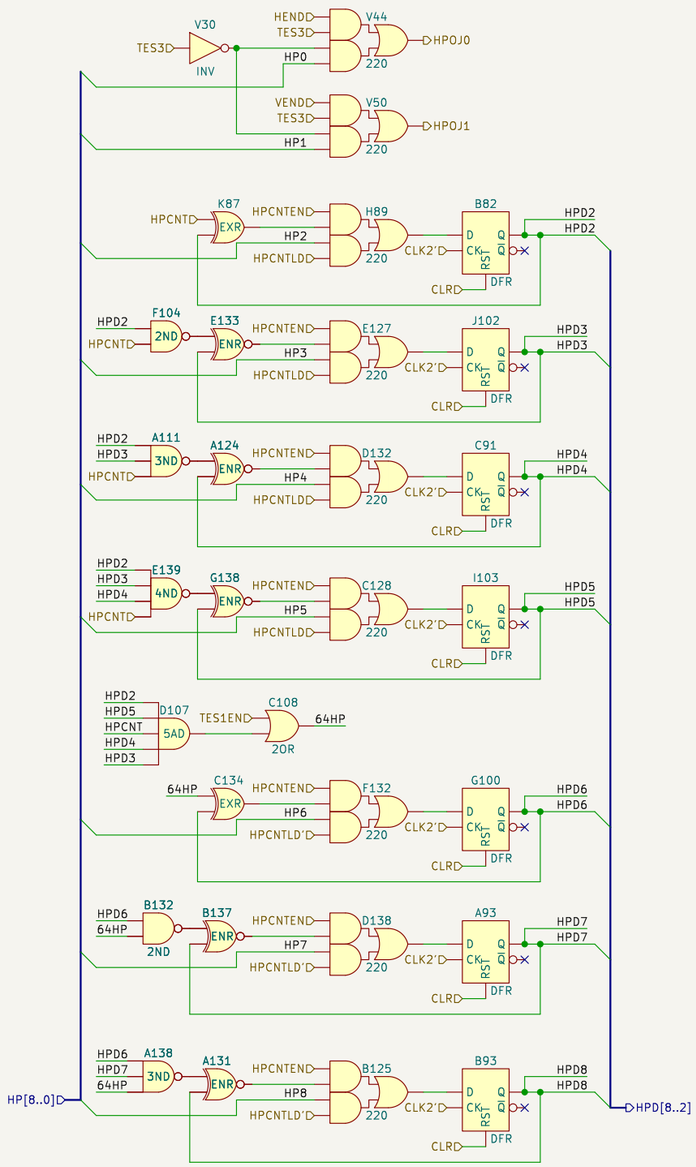

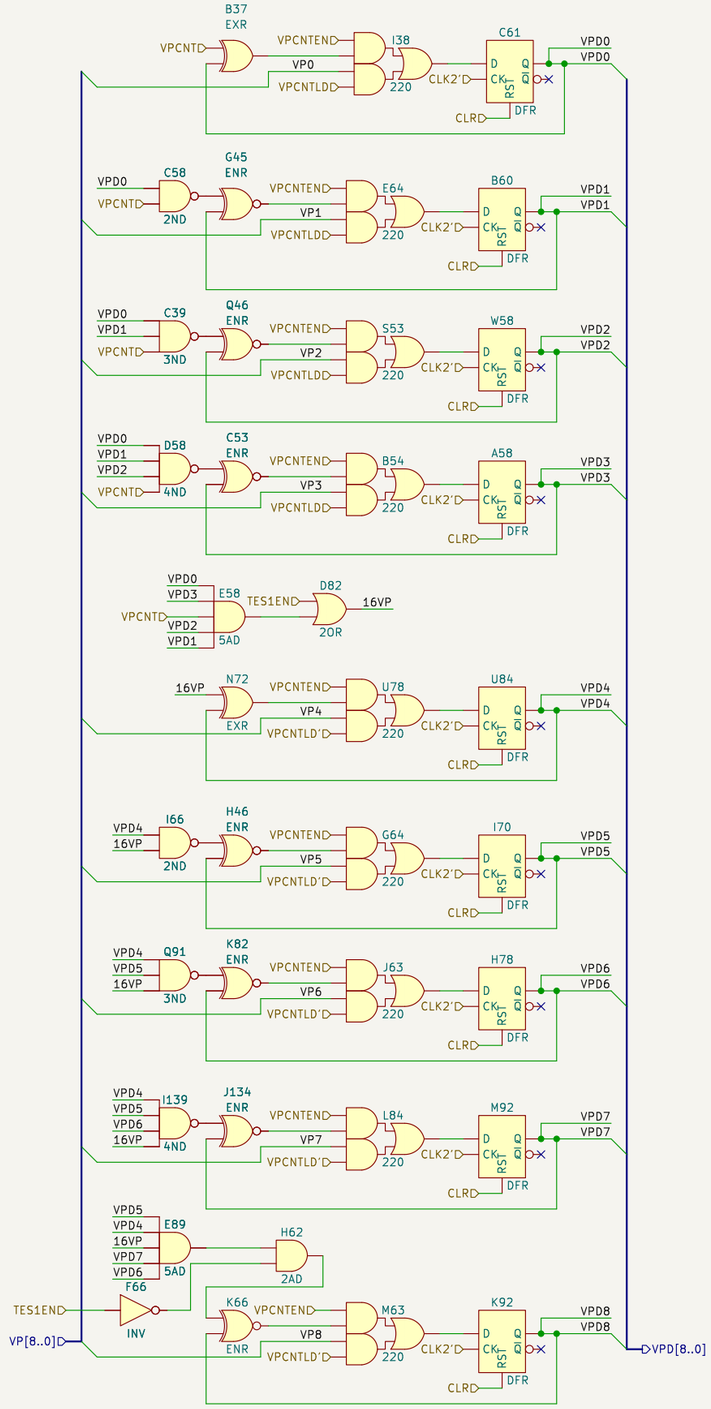

Sheet: /Frame Buffer Address Counters/		
File: frame_buffer_address_counters.kicad_sch		
Title:		
Size: A3	Date: 2023-12-22	**Rev:**
KiCad E.D.A. 8.0.9		Id: 4/7

Object Character Select Address

Object (Sprite) tiles are called
characters on the twin16 platform.

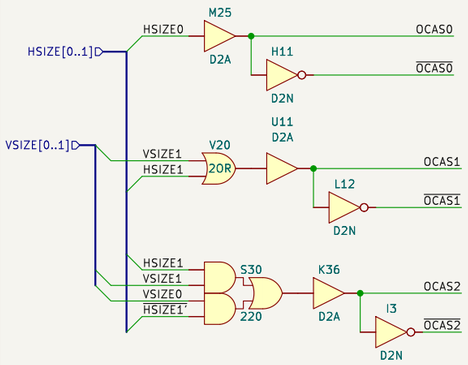

VSIZE1	VSIZE0	VSIZE	HSIZE1	HSIZE0	HSIZE	OCAS2	OCAS1	OCAS0		
0	0	16	0	0	16	0	0	0	0	16H16V
0	0	16	0	1	32	0	0	1	1	32H16V
0	0	16	1	0	64	0	1	0	2	64H16V
0	0	16	1	1	128	0	1	1	3	128H16V
0	1	32	0	0	16	1	0	0	4	16H32V
0	1	32	0	1	32	1	0	1	5	32H32V
0	1	32	1	0	64	0	1	0	2	64H32V
0	1	32	1	1	128	0	1	1	3	128H32V
1	0	64	0	0	16	0	1	0	2	16H64V
1	0	64	0	1	32	0	1	1	3	32H64V
1	0	64	1	0	64	1	1	0	6	64H64V
1	0	64	1	1	128	1	1	1	7	128H64V
1	1	128	0	0	16	1	1	0	6	16H128V
1	1	128	0	1	32	1	1	1	7	32H128V
1	1	128	1	0	64	1	1	0	6	64H128V
1	1	128	1	1	128	1	1	1	7	128H128V

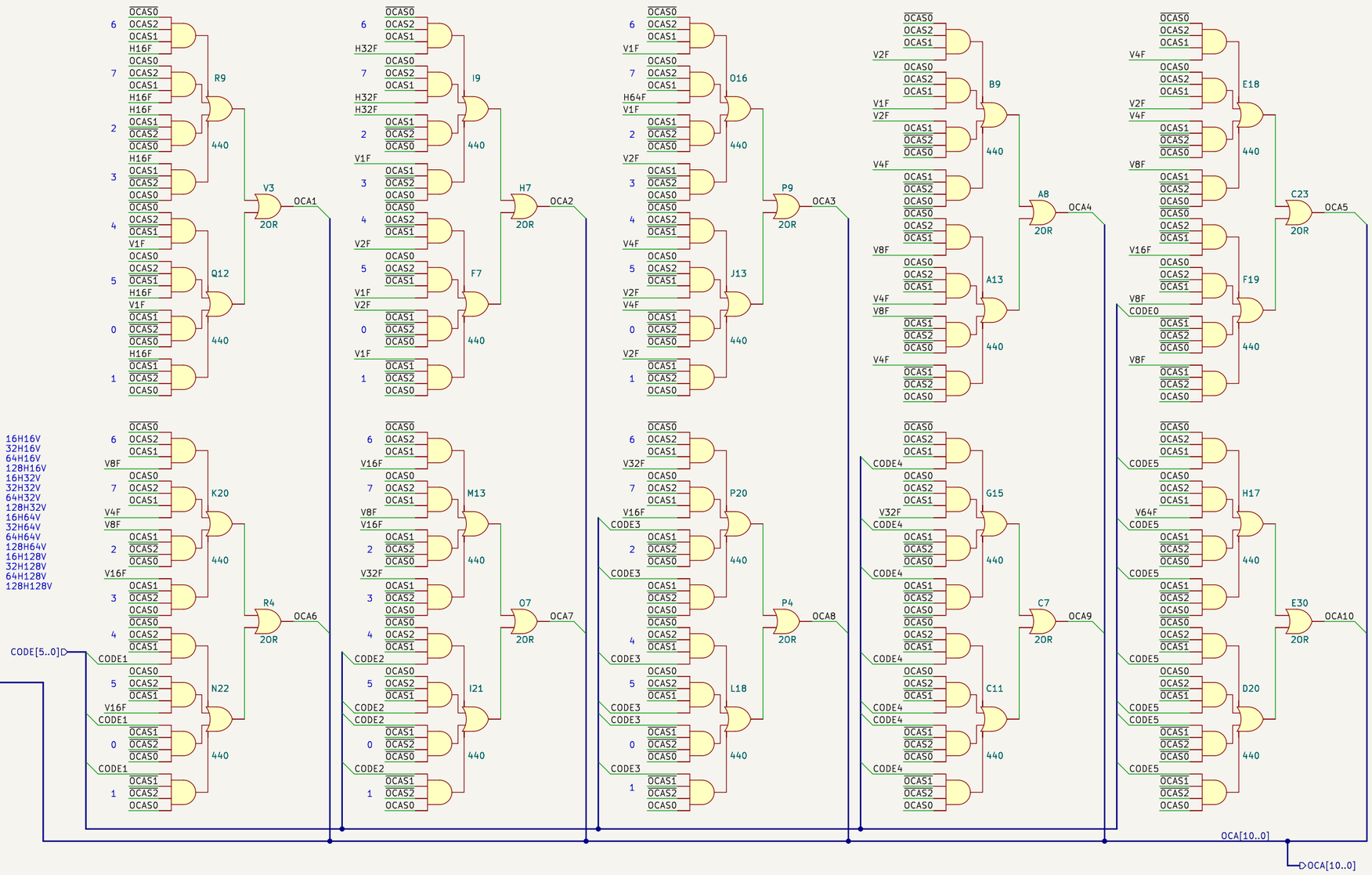

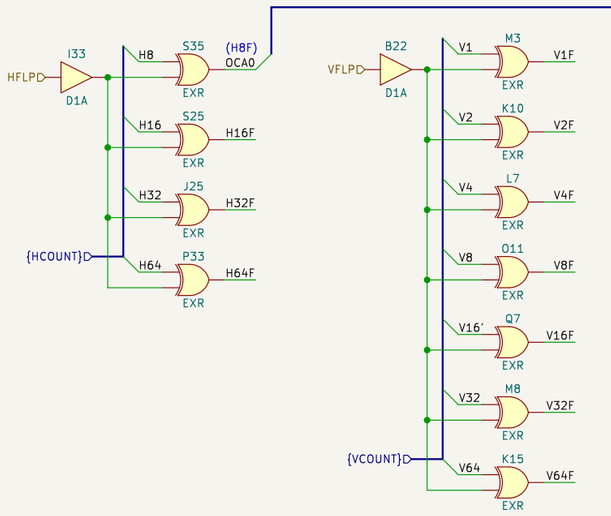

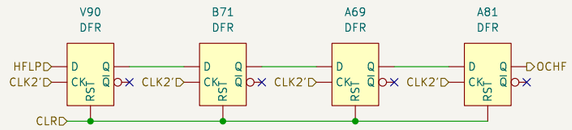

Size	OCA0	OCA1	OCA2	OCA3	OCA4	OCA5	OCA6	OCA7	OCA8	OCA9	OCA10
16H16V	H8F	V1F	V2F	V4F	V8F	CODE0	CODE1	CODE2	CODE3	CODE4	CODE5
32H16V	H8F	H16F	V1F	V2F	V4F	V8F	CODE1	CODE2	CODE3	CODE4	CODE5
16H32V	H8F	V1F	V2F	V4F	V8F	V16F	CODE1	CODE2	CODE3	CODE4	CODE5
32H32V	H8F	H16F	V1F	V2F	V4F	V8F	V16F	CODE2	CODE3	CODE4	CODE5
64H16V, 64H32V, 16H64V	H8F	H16F	H32F	V1F	V2F	V4F	V8F	V16F	CODE3	CODE4	CODE5
128H16V, 128H32V, 32H64V	H8F	H16F	V1F	V2F	V4F	V8F	V16F	V32F	CODE3	CODE4	CODE5
64H64V, 16H128V, 64H128V	H8F	H16F	H32F	V1F	V2F	V4F	V8F	V16F	V32F	CODE4	CODE5
128H64V, 32H128V, 128H128V	H8F	H16F	H32F	H64F	V1F	V2F	V4F	V8F	V16F	V32F	V64F

Sheet: /Obejct Character Address/
File: object_character_address.kicad_sch

Title:

Size: A3	Date: 2023-12-22	**Rev:**
KiCad E.D.A. 8.0.9		Id: 5/7

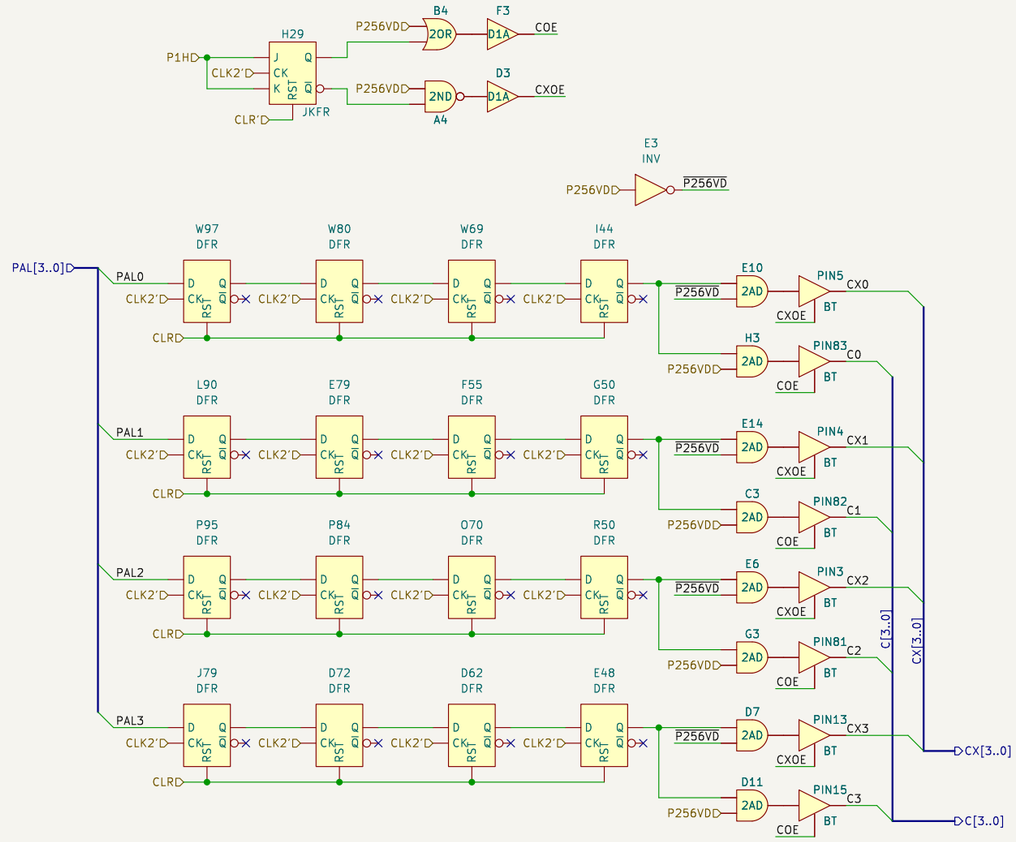

Sheet: /Palette/
File: palette.kicad_sch

Title:

Size: A3 | Date: 2023-12-22 | **Rev:**
KiCad E.D.A. 8.0.9 | Id: 6/7

Word W0: Code
Word W1: HPOS
Word W2: VPOS
Word W3: Params and sprten

Horizontal counter is running while:
~FBREF & ~DINIT

HPCNTEN = ~HEND' & WCNTEN
HPCNTLD = HEND' | ~WCNTEN
HPCNTEN = ~HPCNTLD

Signals delayed four pixelclocks

VPCNTEN = WCNTEN, delayed four pixelclocks

Sheet: /Timing/		
File: timing.kicad_sch		
Title:		
Size: A3	Date: 2023-12-22	**Rev:**
KiCad E.D.A. 8.0.9		Id: 7/7