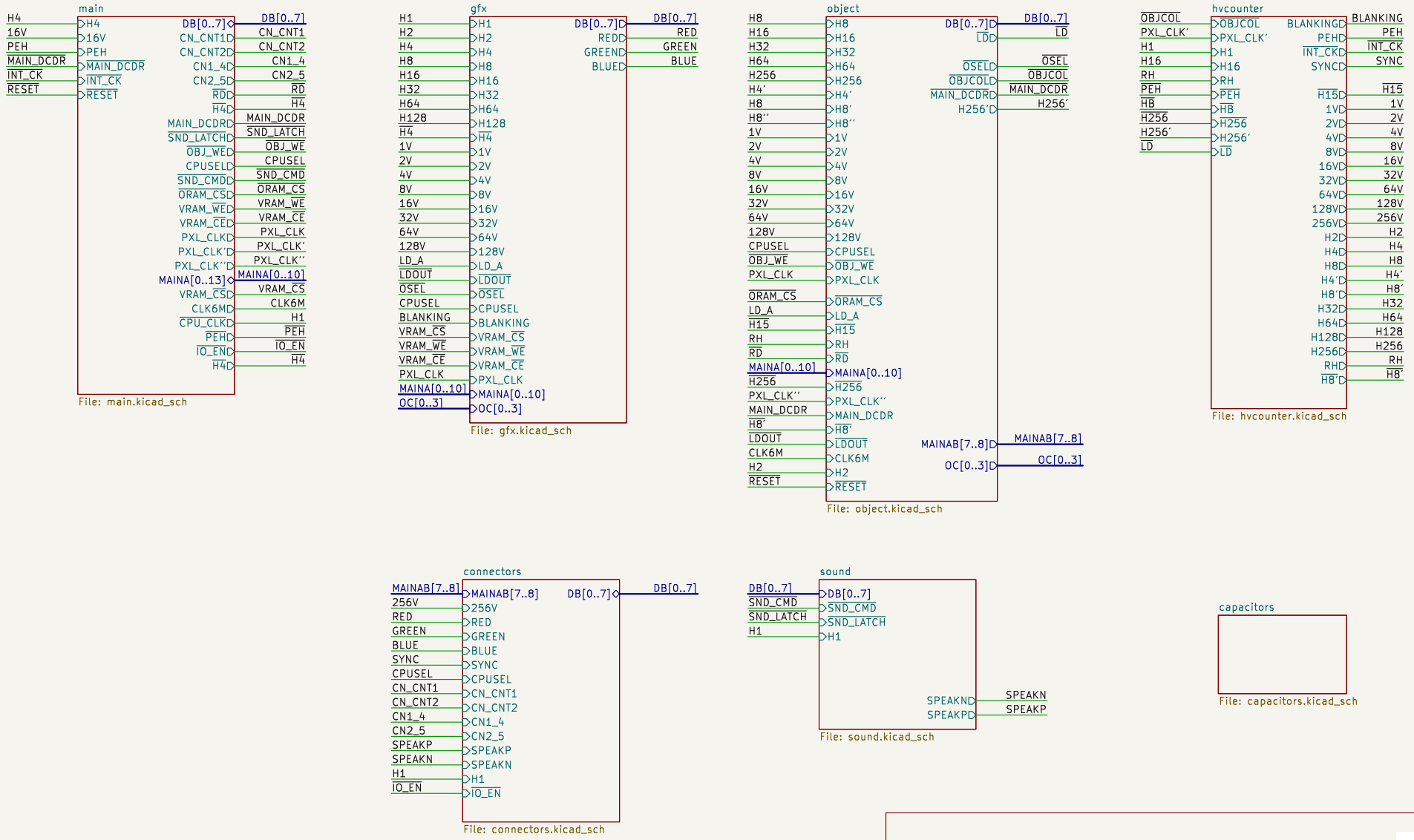
main
H4
16V
PEH
MAIN_DCDR
INT_CK
RESET
H4
16V
PEH
MAIN_DCDR
INT_CK
RESET
DB[0..7]
CN_CNT1
CN_CNT2
CN1_4
CN2_5
RD
H4
MAIN_DCDR
SND_LATCH
OBJ_WE
CPUSEL
SND_CMD
ORAM_CS
VRAM_WE
VRAM_CE
PXL_CLK
PXL_CLK'
PXL_CLK''
MAINA[0..13]
MAINA[0..10]
VRAM_CS
CLK6M
CPU_CLK
H1
PEH
IO_EN
H4
DB[0..7]
CN_CNT1
CN_CNT2
CN1_4
CN2_5
RD
H4
MAIN_DCDR
SND_LATCH
OBJ_WE
CPUSEL
SND_CMD
ORAM_CS
VRAM_WE
VRAM_CE
PXL_CLK
PXL_CLK'
PXL_CLK''
MAINA[0..10]
VRAM_CS
CLK6M
H1
PEH
IO_EN
H4
File: main.kicad_sch
gfx
H1
H2
H4
H8
H16
H32
H64
H128
H4
1V
2V
4V
8V
16V
32V
64V
128V
LD_A
LDOUT
OSEL
CPUSEL
BLANKING
VRAM_CS
VRAM_WE
VRAM_CE
PXL_CLK
MAINA[0..10]
OC[0..3]
H1
H2
H4
H8
H16
H32
H64
H128
H4
1V
2V
4V
8V
16V
32V
64V
128V
LD_A
LDOUT
OSEL
CPUSEL
BLANKING
VRAM_CS
VRAM_WE
VRAM_CE
PXL_CLK
MAINA[0..10]
OC[0..3]
DB[0..7]
RED
GREEN
BLUE
DB[0..7]
RED
GREEN
BLUE
File: gfx.kicad_sch
object
H8
H16
H32
H64
H256
H4'
H8
H8''
1V
2V
4V
8V
16V
32V
64V
128V
CPUSEL
OBJ_WE
PXL_CLK
ORAM_CS
LD_A
H15
RH
RD
MAINA[0..10]
H256
PXL_CLK''
MAIN_DCDR
H8'
LDOUT
CLK6M
H2
RESET
H8
H16
H32
H64
H256
H4'
H8'
H8''
1V
2V
4V
8V
16V
32V
64V
128V
CPUSEL
OBJ_WE
PXL_CLK
ORAM_CS
LD_A
H15
RH
RD
MAINA[0..10]
H256
PXL_CLK''
MAIN_DCDR
H8'
LDOUT
CLK6M
H2
RESET
DB[0..7]
LD
OSEL
OBJCOL
MAIN_DCDR
H256'
MAINAB[7..8]
OC[0..3]
DB[0..7]
LD
OSEL
OBJCOL
MAIN_DCDR
H256'
MAINAB[7..8]
OC[0..3]
File: object.kicad_sch
hvcounter
OBJCOL
PXL_CLK'
H1
H16
RH
PEH
HB
H256
H256'
LD
OBJCOL
PXL_CLK'
H1
H16
RH
PEH
HB
H256
H256'
LD
BLANKING
PEH
INT_CK
SYNC
H15
1V
2V
4V
8V
16V
32V
64V
128V
256V
H2
H4
H8
H4'
H8'
H32
H64
H128
H256
RH
H8'
BLANKING
PEH
INT_CK
SYNC
H15
1V
2V
4V
8V
16V
32V
64V
128V
256V
H2
H4
H8
H4'
H8'
H32
H64
H128
H256
RH
H8'
File: hvcounter.kicad_sch
connectors
MAINAB[7..8]
256V
RED
GREEN
BLUE
SYNC
CPUSEL
CN_CNT1
CN_CNT2
CN1_4
CN2_5
SPEAKP
SPEAKN
H1
IO_EN
MAINAB[7..8]
256V
RED
GREEN
BLUE
SYNC
CPUSEL
CN_CNT1
CN_CNT2
CN1_4
CN2_5
SPEAKP
SPEAKN
H1
IO_EN
DB[0..7]
DB[0..7]
File: connectors.kicad_sch
sound
DB[0..7]
SND_CMD
SND_LATCH
H1
DB[0..7]
SND_CMD
SND_LATCH
H1
SPEAKND
SPEAKPD
SPEAKN
SPEAKP
File: sound.kicad_sch
capacitors
File: capacitors.kicad_sch
JOTEGO
Ping Pong
JOTEGO
Sheet: /
File: pingpong.kicad_sch
GX555
Title: Ping Pong
Size: A4
Date: 2022-03-28
Rev: J. Tejada
KiCad E.D.A. 8.0.9
Id: 1/11

MAIN PROGRAM ROM

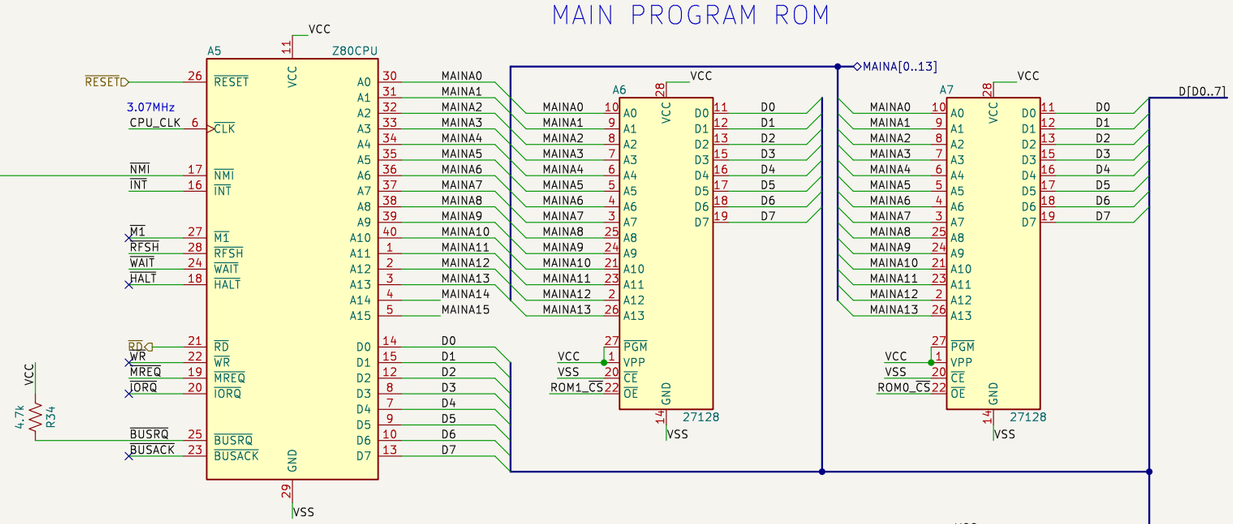

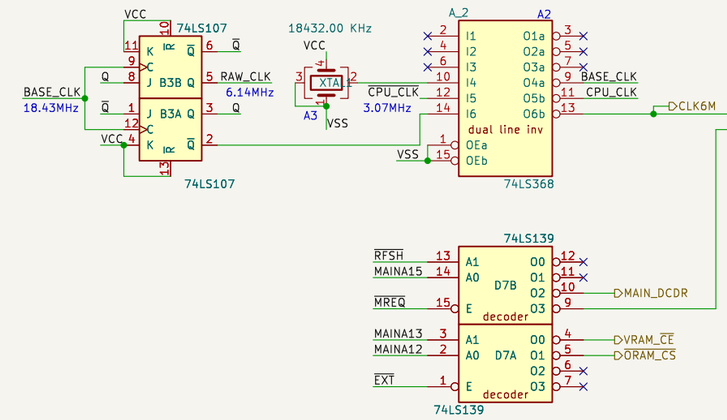

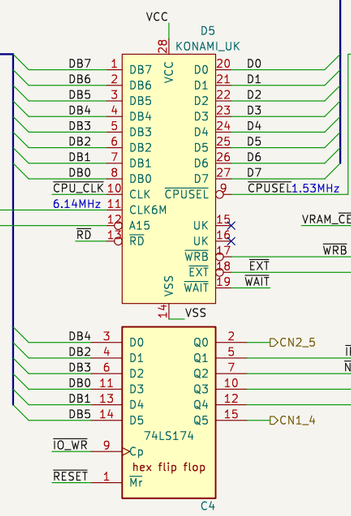

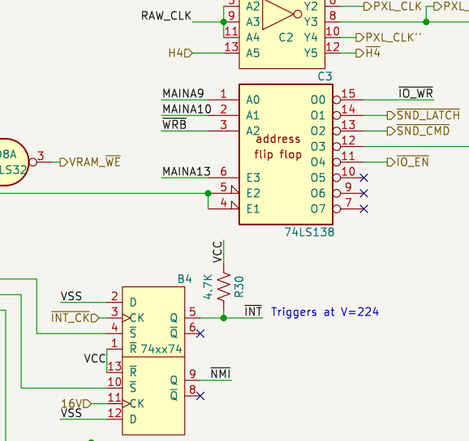

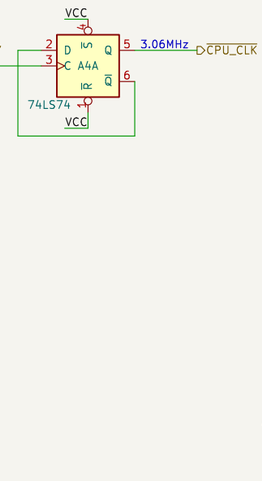

JOTEGO
Ping Pong
JOTEGO

Sheet: /main/
File: main.kicad_sch

Title: CPU & address decoders

Size: A3	Date: 2022-03-28	**Rev: J. Tejada**
KiCad E.D.A. 8.0.9		Id: 2/11

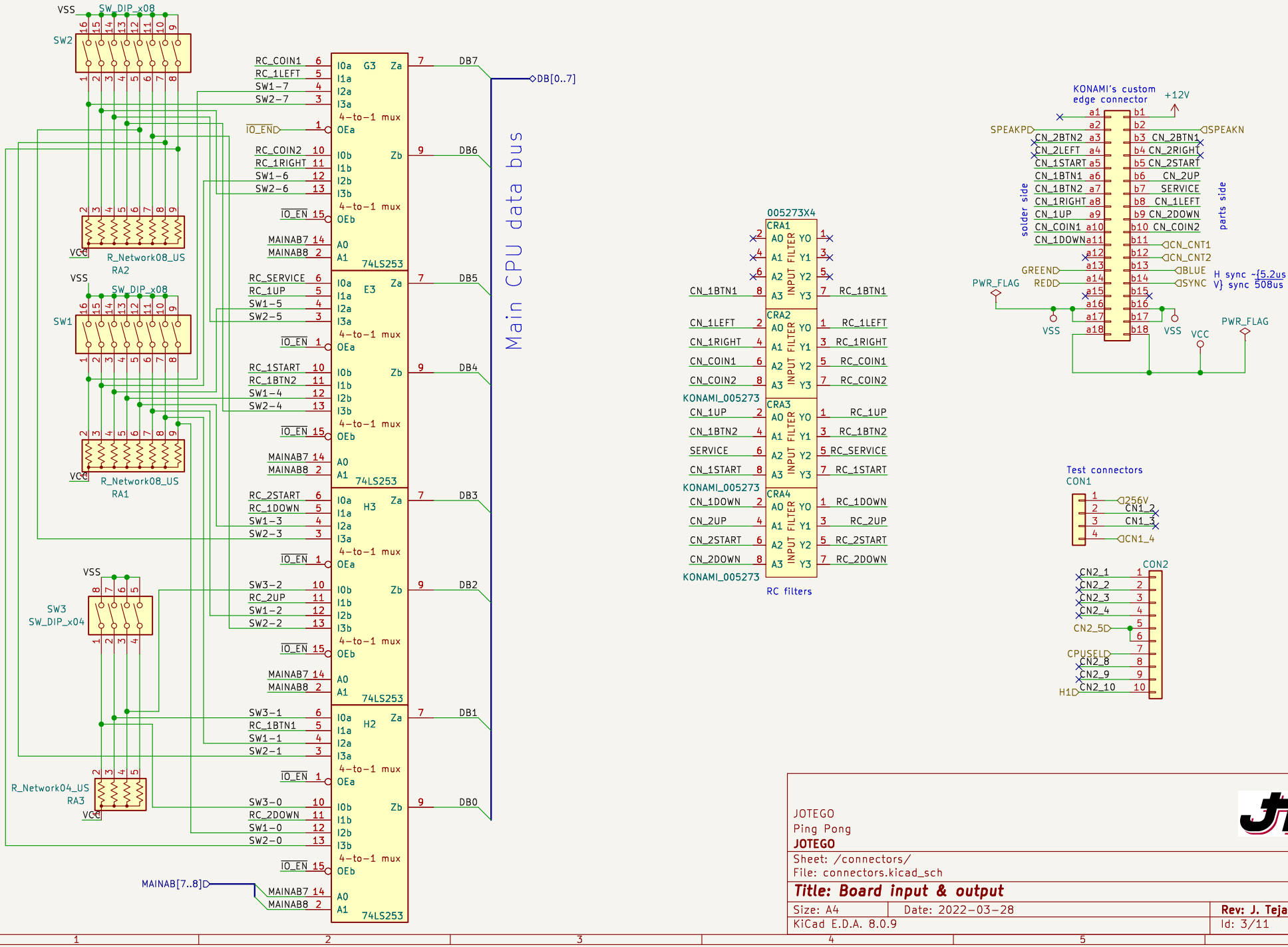

JOTEGO
Ping Pong
JOTEGO

Sheet: /connectors/
File: connectors.kicad_sch

Title: Board input & output

Size: A4	Date: 2022-03-28	**Rev: J. Tejada**
KiCad E.D.A. 8.0.9		Id: 3/11

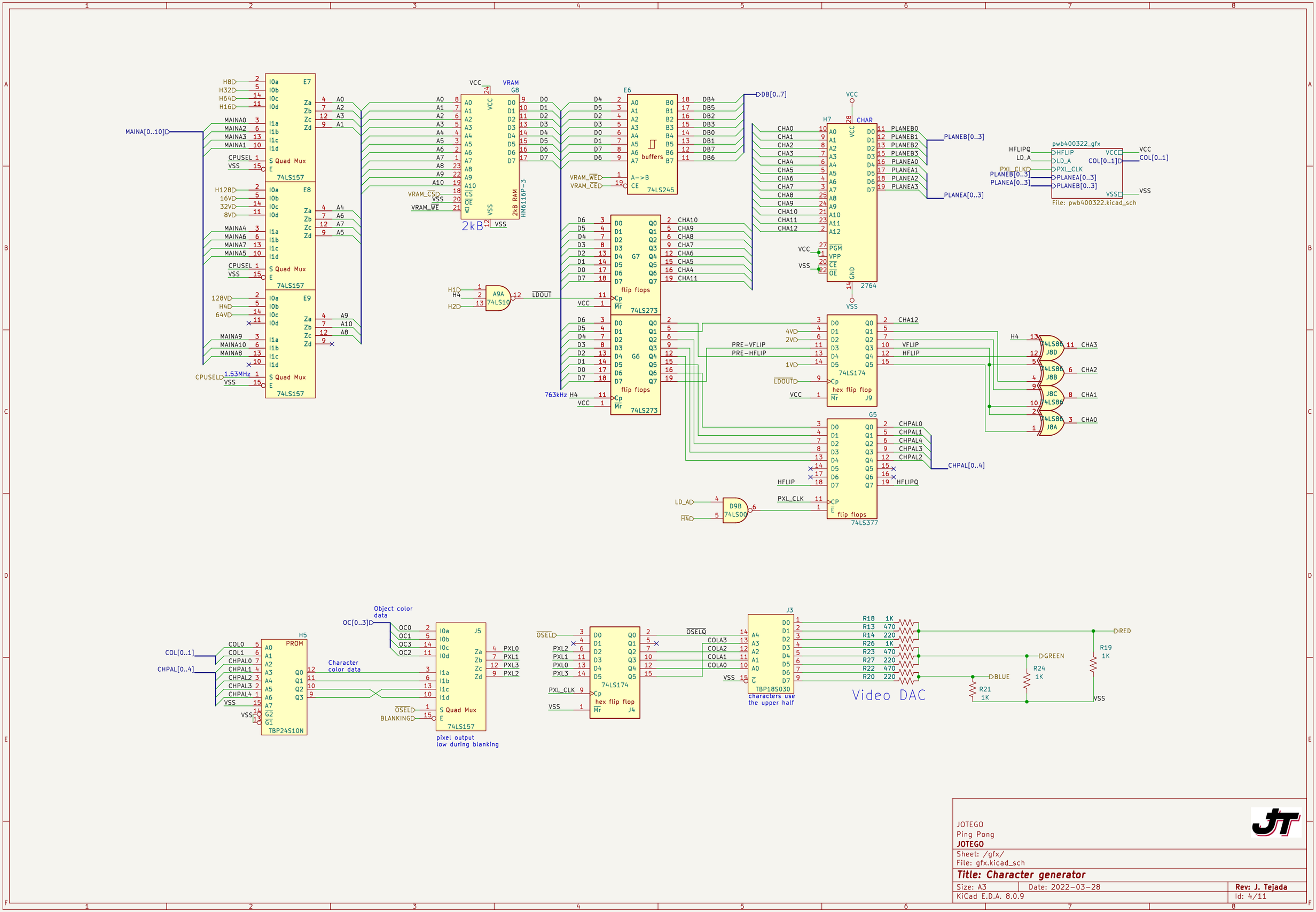

JOTEGO
Ping Pong
JOTEGO
Sheet: /gfx/
File: gfx.kicad_sch

Title: Character generator

Size: A3	Date: 2022-03-28	**Rev: J. Tejada**
KiCad E.D.A. 8.0.9		Id: 4/11

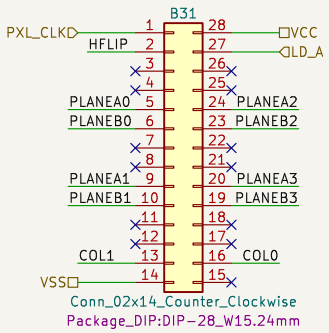

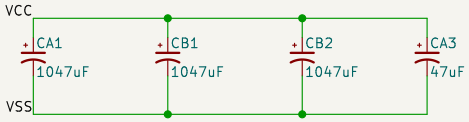

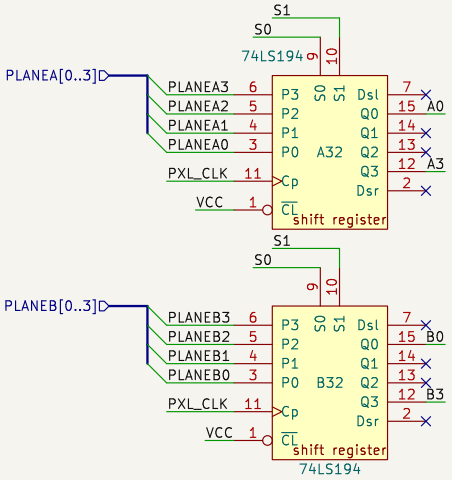

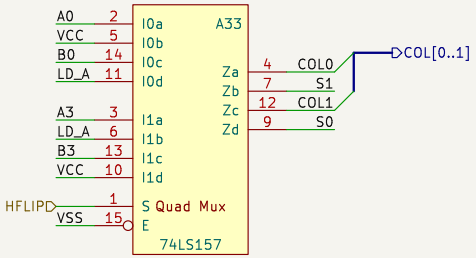

This is a small board soldered to a DIP-28 footprint. It appears twice in the design

PWB-400322

JOTEGO
Ping Pong
JOTEGO

Sheet: /gfx/pwb400322_gfx/
File: pwb400322.kicad_sch

Title: Pixel shift register

Size: A4	Date: 2022-03-28	**Rev: J. Tejada**
KiCad E.D.A. 8.0.9		Id: 5/11

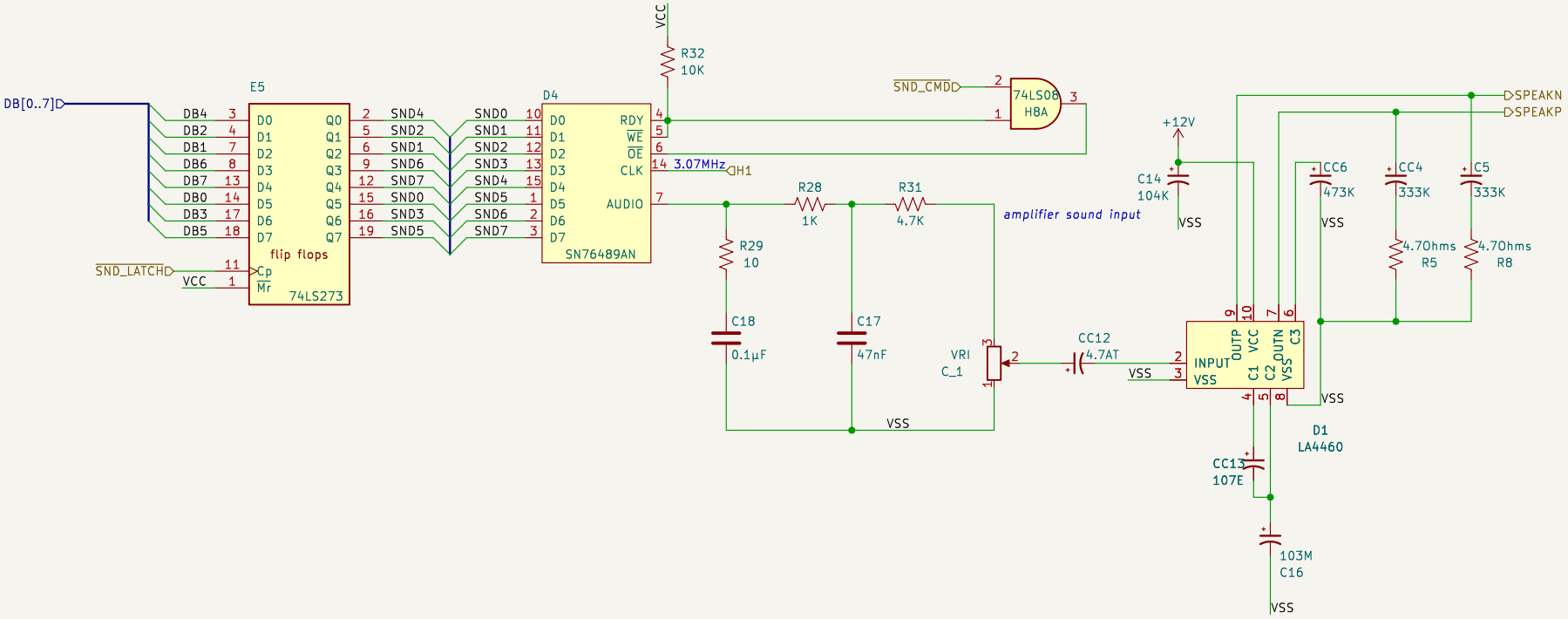

JOTEGO
Ping Pong
JOTEGO

Sheet: /sound/
File: sound.kicad_sch

Title: Sound generator

Size: A4	Date: 2022-03-28	**Rev: J. Tejada**
KiCad E.D.A. 8.0.9		Id: 6/11

OBJRAM

MAINA[0..10]

192kHz H16 781kHz H4 385kHz H8 96kHz H32

MAINA2 MAINA0 MAINA1 MAINA3 CPUSEL VSS

74LS157 (S Quad Mux)

16.1kHz 47.6kHz 16.1kHz H256 H64 RHD VSS

MAINA6 MAINA4 MAINA5 MAINA7 CPUSEL VSS

74LS157 (S Quad Mux)

VSS

MAINA10 MAINA9 RDD MAINA8

1.54MHz CPUSEL VSS

74LS157 (S Quad Mux)

AA2 AA0 AA1 AA3 AA6 AA4 AA5 AA7 AA10 AA9 OEB AA8

VCC

A8 HM6116P-3

AA0 AA1 AA2 AA3 AA4 AA5 AA6 AA7 AA8 AA9 AA10 VSS OEB OBJ_WE

D0 DA0 … D7 DA7

2kB RAM OBJECT TABLE

24 objects read in order from the first 24x4 bytes

A10 buffers 74LS245

DA7 DA6 DA5 DA4 DA3 DA2 DA1 DA0

DB7 DB6 DB5 DB4 DB3 DB2 DB1 DB0

DB[0..7]

OBJ_WE1

ORAM_CS

DA1 DA3 DA5 DA7 DA6 DA4 DA2 DA0

H15D VCC

flip flops 74LS273

ATTR1 ATTR3 ATTR5 ATTR7 ATTR6 ATTR4 ATTR2 ATTR0

PRE_LINE HFLIP ATTR4 ATTR0 ATTR1 ATTR2 ATTR3

PXL_CLK OBJCOL

74LS377 (flip flops) G11

LINECS HFLIP' PAL4 PAL0 PAL1 PAL2 PAL3

COL[0..1]

J11 PROM

COL0 COL1 PAL0 PAL1 PAL2 PAL3 PAL4 VSS

IC[0..3]

IC3 IC2 IC1 IC0

TBP24S10N Color PROM

E10

ATTR6 ATTR7 MAINA8 MAINA7 H8'D VSS

74LS367

DN6 (hflip) DN7 (vflip) MAINAB8 MAINAB7

MAINAB[7..8]

DA7 DA5 DA3 DA1 DA0 DA2 DA4 DA6

A11 3-state flip flops 74LS374

H8' H8''

DN7 DN5 DN3 DN1 DN0 DN2 DN4 DN6

A12 V/HFLIP XORed

DN7 DN6 DN5 DN4 DN3 DN2 DN1 DN0

128V 64V 32V 16V 8V 4V 2V 1V

OBJV8 OBJH8 OBJH4 OBJV4 OBJV2 OBJV1

OBJDATA OBJCOL HFLIP LINE_CS

H8 (input) H4 LD

17383kHz 16766kHz

KONAMI_503

OBJ5 OBJ4 OBJ3 OBJ2 OBJ1 OBJ0

OBJDATA OBJCOL HFLIP PRE_LINE

H8' H4' LD

C12 2764 8kB

OBJ0 OBJ1 OBJ2 OBJ3 OBJ4 OBJ5 OBJ6 OBJ7 OBJ8 OBJ9 OBJ10 OBJ11 OBJ12

PGM VPP CE OE GND VCC VSS OE_M

OBJD0 OBJD1 OBJD2 OBJD3 OBJD4 OBJD5 OBJD6 OBJD7

OBJD[0..7]

DA6 DA2 DA3 DA4 DA5 DA0 DA1 DA7

C13 flip flops 74LS273

OBJ12 OBJ8 OBJ9 OBJ10 OBJ11 OBJ6 OBJ7 OBJ13

OBJDATA

H9A ATTR5 74LS74

OE_OF OE_M

C11 27128 16kB ONLY FOOTPRINT

OBJ0 OBJ1 OBJ2 OBJ3 OBJ4 OBJ5 OBJ6 OBJ7 OBJ8 OBJ9 OBJ10 OBJ11 OBJ12 OBJ13

OBJD0 OBJD1 OBJD2 OBJD3 OBJD4 OBJD5 OBJD6 OBJD7

PGM VPP CE OE GND VCC VSS OE_OF

pwb400322

OBJD[4..7] OBJD[0..3] PXL_CLK HFLIP LD_A

PLANEA[0..3] PLANEB[0..3] PXL_CLK HFLIP LD_A VCC COL[0..1] VSS

File: pwb400322.kicad_sch

linebuffer

PXL_CLK'' DA[0..7] LINECS H2 LD OBJCOL MAIN_DCDR H8' LDOUT H256 CLK6M IC[0..3] RESET

PXL_CLK'' DA[0..7] LINECS H2 LD OBJCOL MAIN_DCDR H8' LDOUT H256 CLK6M IC[0..3] RESET OC[0..3] OSEL H256 H8'' LD_A H256' MAIN_DCDR

OC[0..3] OSEL H256 H8'' LD_A H256' MAIN_DCDR

File: linebuffer.kicad_sch

JOTEGO
Ping Pong
JOTEGO

Sheet: /object/
File: object.kicad_sch

Title: Object generator

Size: A3	Date: 2022-03-28	**Rev: J. Tejada**
KiCad E.D.A. 8.0.9		Id: 7/11

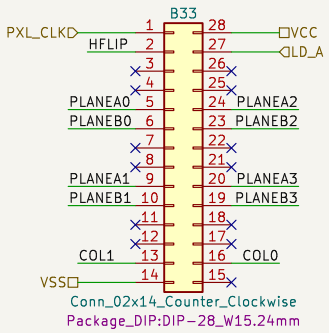

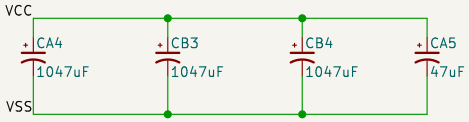

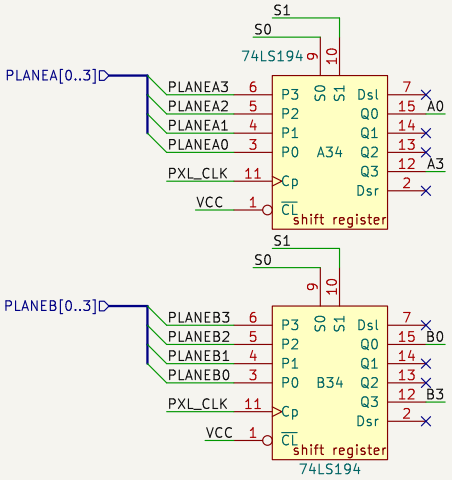

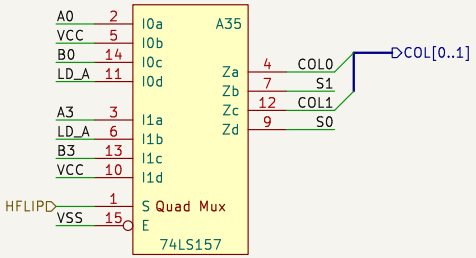

This is a small board soldered to a DIP-28 footprint. It appears twice in the design

PWB-400322

JOTEGO
Ping Pong
JOTEGO

Sheet: /object/pwb400322/
File: pwb400322.kicad_sch

Title: Pixel shift register

Size: A4	Date: 2022-03-28	**Rev: J. Tejada**
KiCad E.D.A. 8.0.9		Id: 8/11

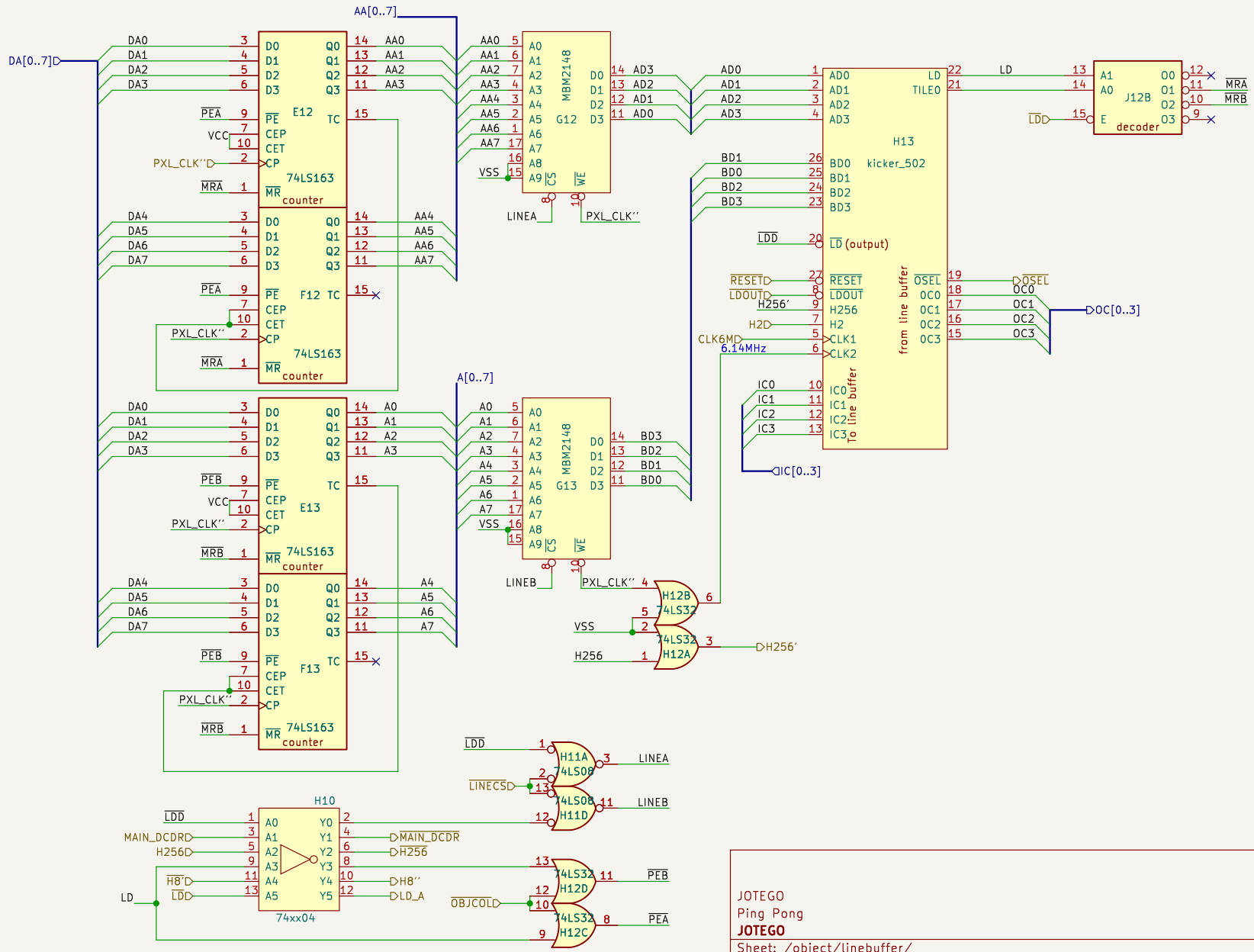

JOTEGO
Ping Pong
JOTEGO

Sheet: /object/linebuffer/
File: linebuffer.kicad_sch

Title: Doube line buffer

Size: A4	Date: 2022-03-28	**Rev: J. Tejada**
KiCad E.D.A. 8.0.9		Id: 9/11

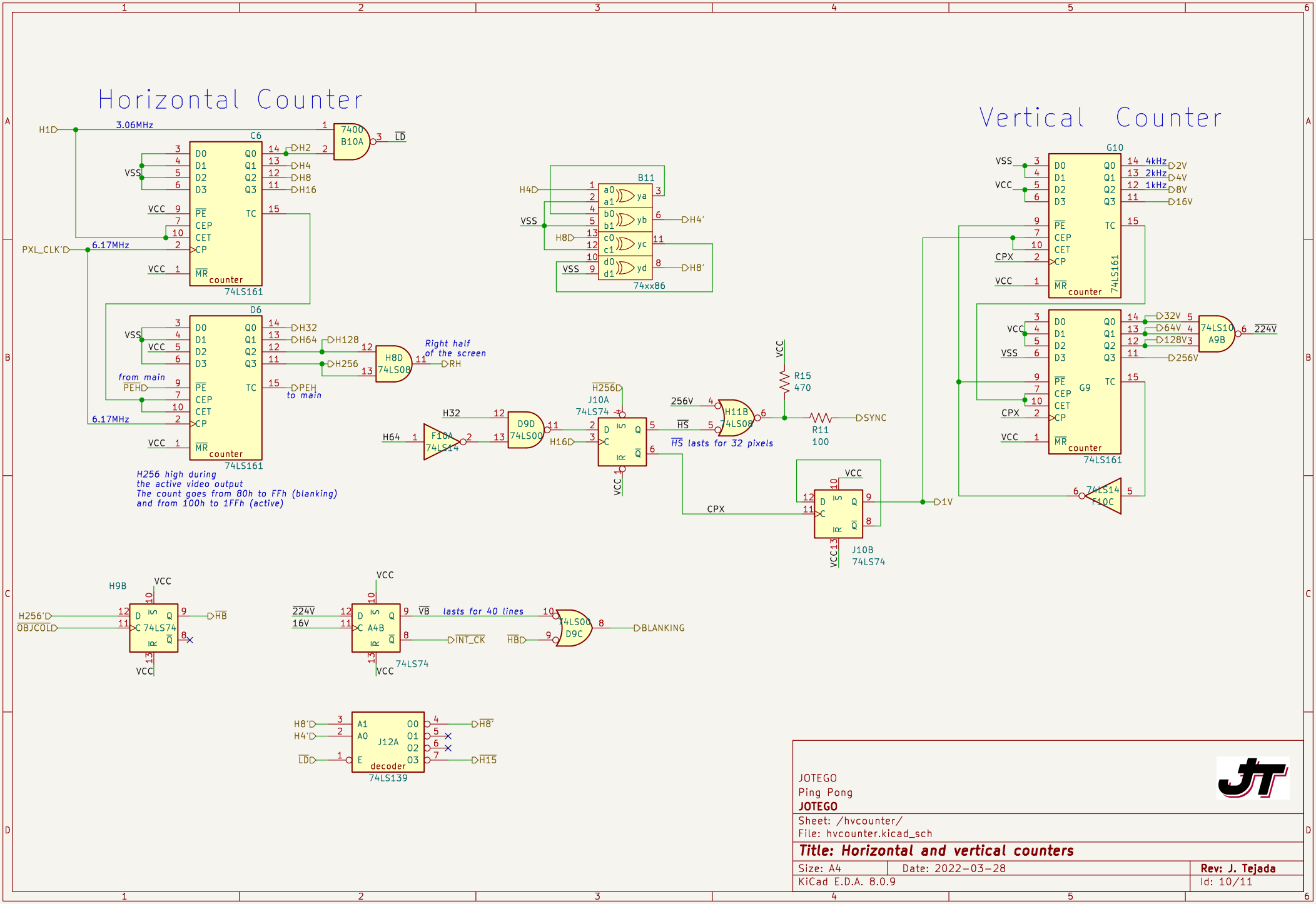
Horizontal Counter
Vertical Counter
H1
3.06MHz
7400
B10A
LD
C6
D0
D1
D2
D3
Q0
Q1
Q2
Q3
H2
H4
H8
H16
VSS
VCC
PE
CEP
CET
CP
MR
TC
counter
74LS161
PXL_CLK'D
6.17MHz
D6
H32
H64
H128
H256
H8D
74LS08
Right half
of the screen
RH
from main
PEH
to main
H256 high during
the active video output
The count goes from 80h to FFh (blanking)
and from 100h to 1FFh (active)
B11
a0
a1
b0
b1
c0
c1
d0
d1
ya
yb
yc
yd
74xx86
H4'
H8'
H32
H64
F10A
74LS14
D9D
74LS00
H16
J10A
74LS74
H256
256V
H11B
HS
HS lasts for 32 pixels
R15
470
R11
100
SYNC
CPX
J10B
1V
G10
2kHz
4kHz
1kHz
2V
4V
8V
16V
G9
32V
64V
128V
256V
74LS10
A9B
224V
F10C
H9B
H256'D
OBJCOLD
HB
A4B
VB
lasts for 40 lines
INT_CK
D9C
BLANKING
J12A
decoder
74LS139
H15
JOTEGO
Ping Pong
JOTEGO
Sheet: /hvcounter/
File: hvcounter.kicad_sch
Title: Horizontal and vertical counters
Size: A4
Date: 2022-03-28
Rev: J. Tejada
KiCad E.D.A. 8.0.9
Id: 10/11

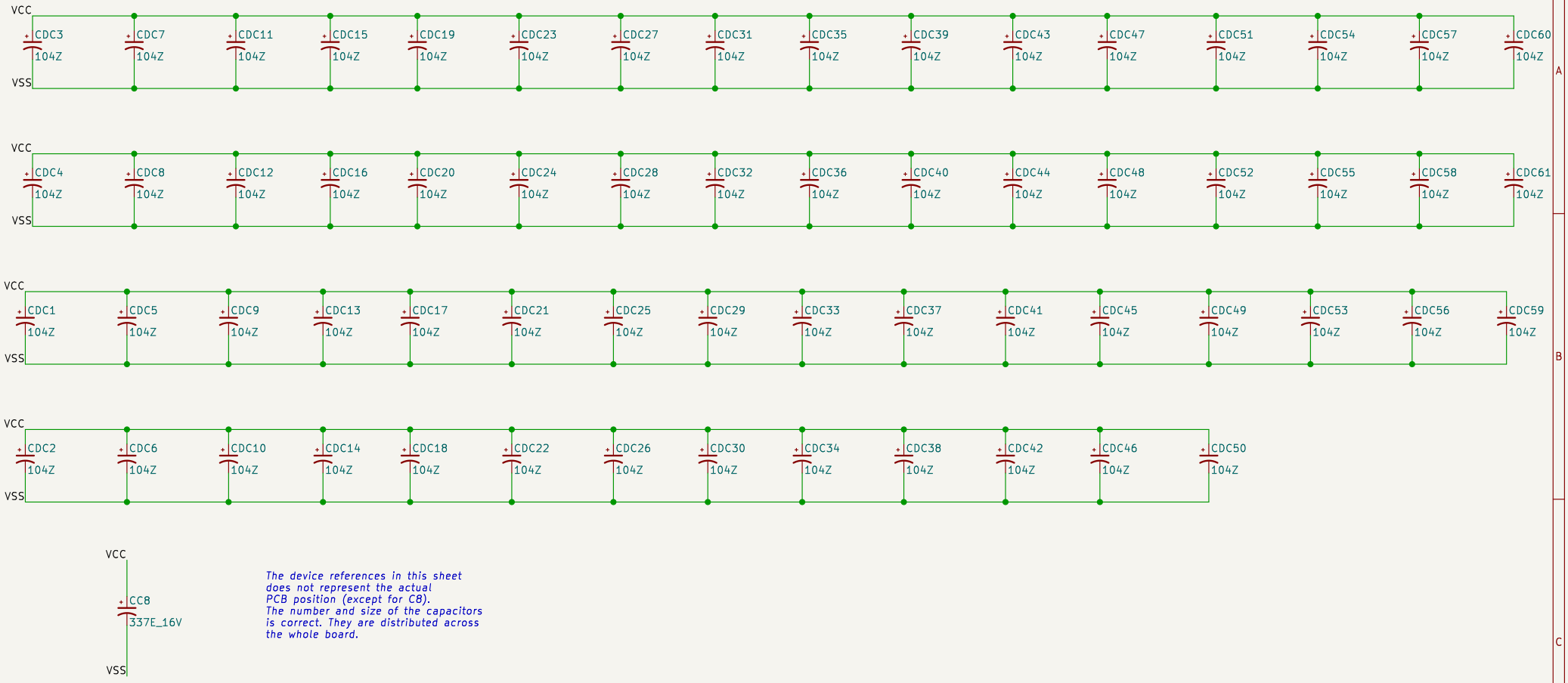

The device references in this sheet does not represent the actual PCB position (except for C8). The number and size of the capacitors is correct. They are distributed across the whole board.

JOTEGO
Ping Pong
JOTEGO

Sheet: /capacitors/
File: capacitors.kicad_sch

Title: Decoupling capacitors

Size: A4	Date: 2022-03-28	**Rev: J. Tejada**
KiCad E.D.A. 8.0.9		Id: 11/11