JM1

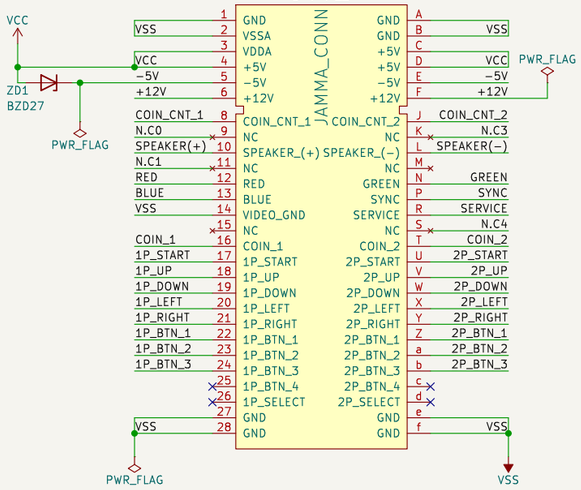

CABINET I/O

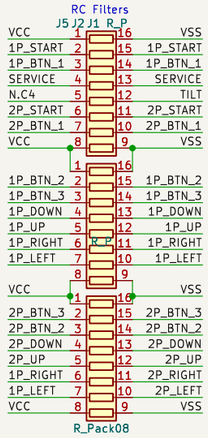

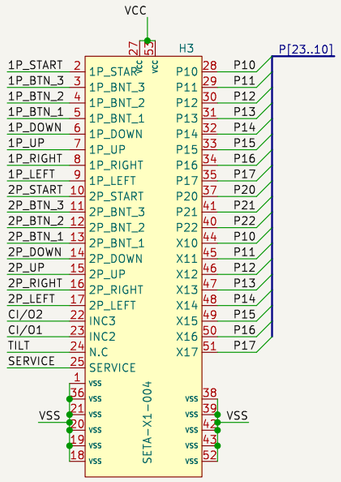

main

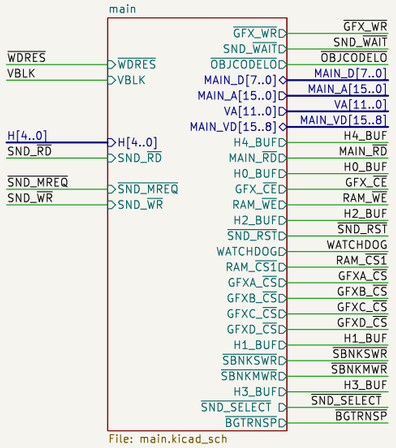

mcu

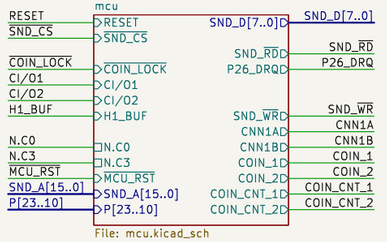

gfx

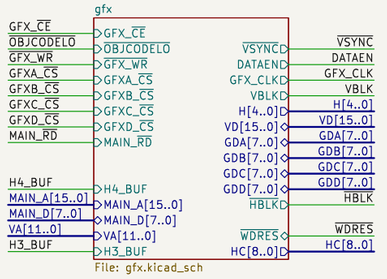

colmix

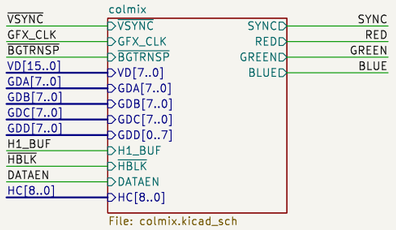

watchdog

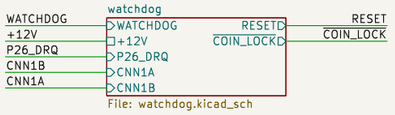

capacitors

sound

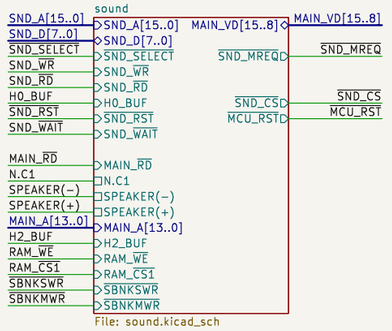

JOTEGO

Sheet: /
File: exterm.kicad_sch

Title: EXTERMINATION

Size: A3	Date: 29/08/2022	Rev: José Tejada G.
KiCad E.D.A. 8.0.9		Id: 1/10

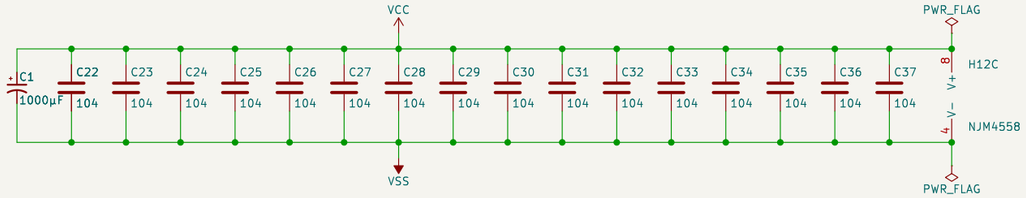

H5E
74LS02

B7C
74LS74

B4C
74LS74

B3C
74LS74

B2E
74LS08

G13G
74LS04

C6E
74LS32

B6E
74LS08

B1G
74LS04

JOTEGO

Sheet: /capacitors/
File: capacitors.kicad_sch

Title: EXTERMINATION

Size: A3	Date: 29/08/2022	**Rev: José Tejada G.**
KiCad E.D.A. 8.0.9		Id: 2/10

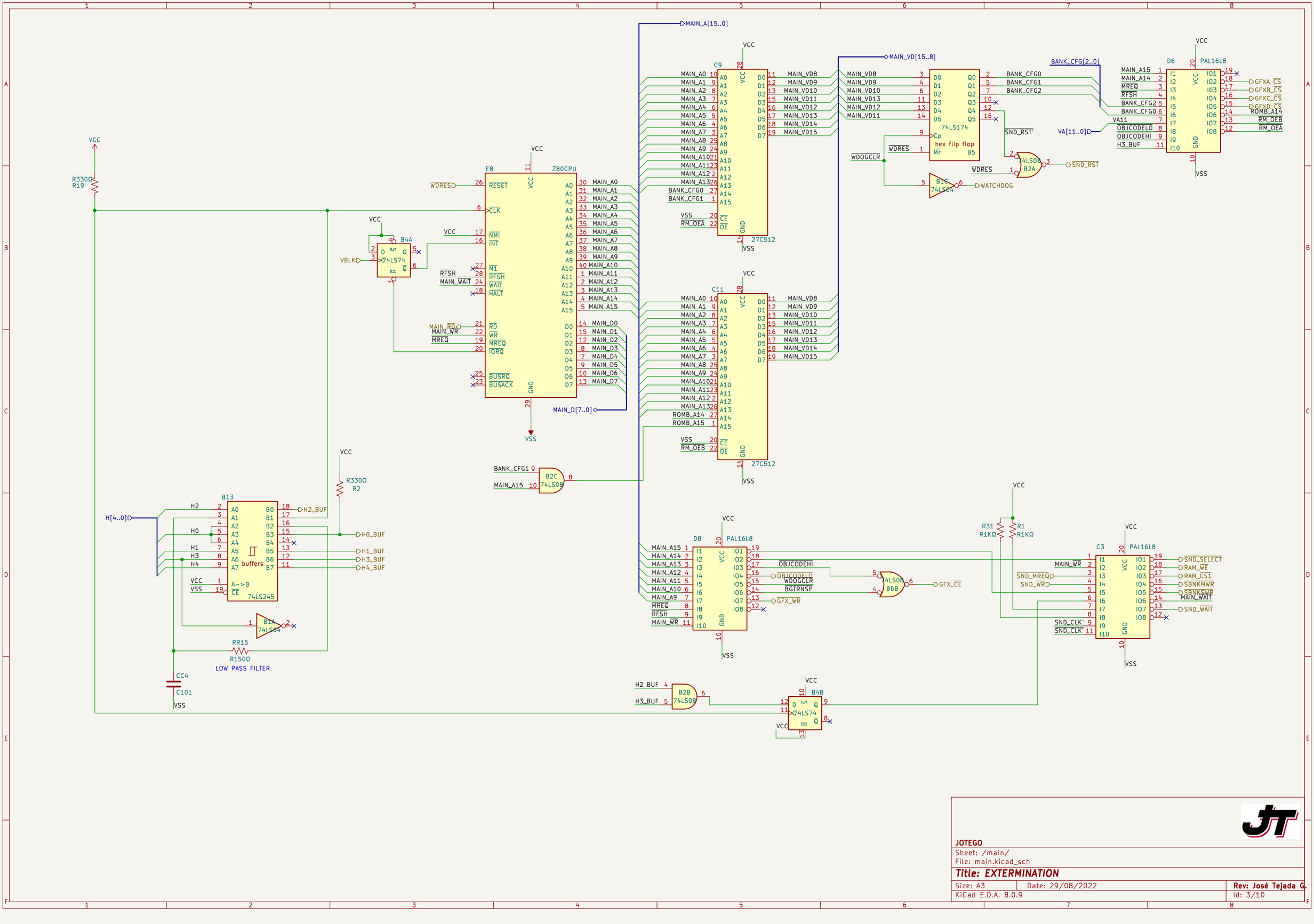

JOTEGO

Sheet: /main/

File: main.kicad_sch

Title: EXTERMINATION

Size: A3	Date: 29/08/2022	Rev: José Tejada G.
KiCad E.D.A. 8.0.9		Id: 3/10

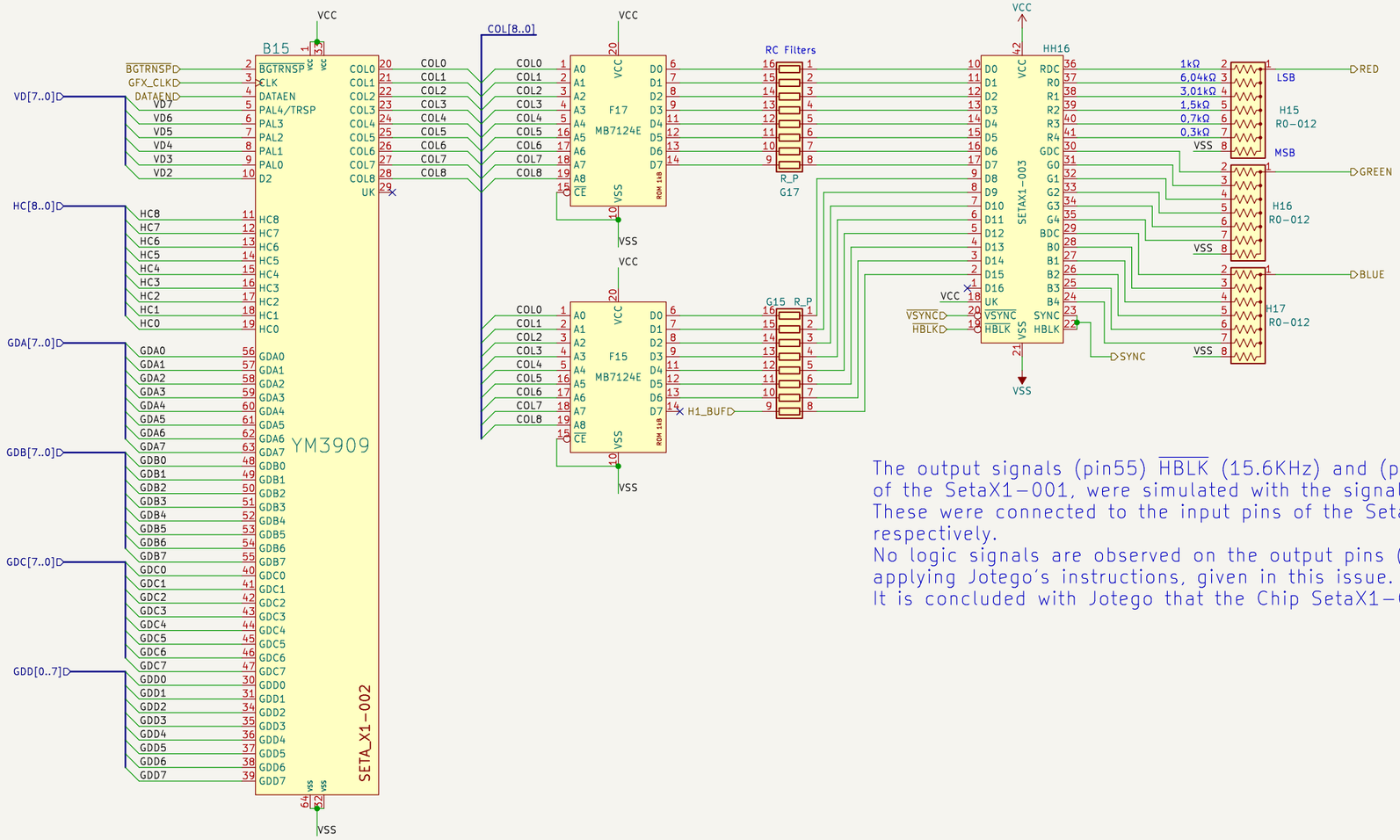

The output signals (pin55) $\overline{\text{HBLK}}$ (15.6KHz) and (pin56) $\overline{\text{VSYNC}}$ (59.2 Hz) of the SetaX1−001, were simulated with the signal generator and an inverter. These were connected to the input pins of the SetaX01−003 (pin 19 − 20), respectively.
No logic signals are observed on the output pins (22−23) HBLK − SYNC, applying Jotego's instructions, given in this issue.
It is concluded with Jotego that the Chip SetaX1−001 is broken.

JOTEGO

Sheet: /colmix/		
File: colmix.kicad_sch		
Title: EXTERMINATION		
Size: A3	Date: 29/08/2022	**Rev: José Tejada G.**
KiCad E.D.A. 8.0.9		Id: 4/10

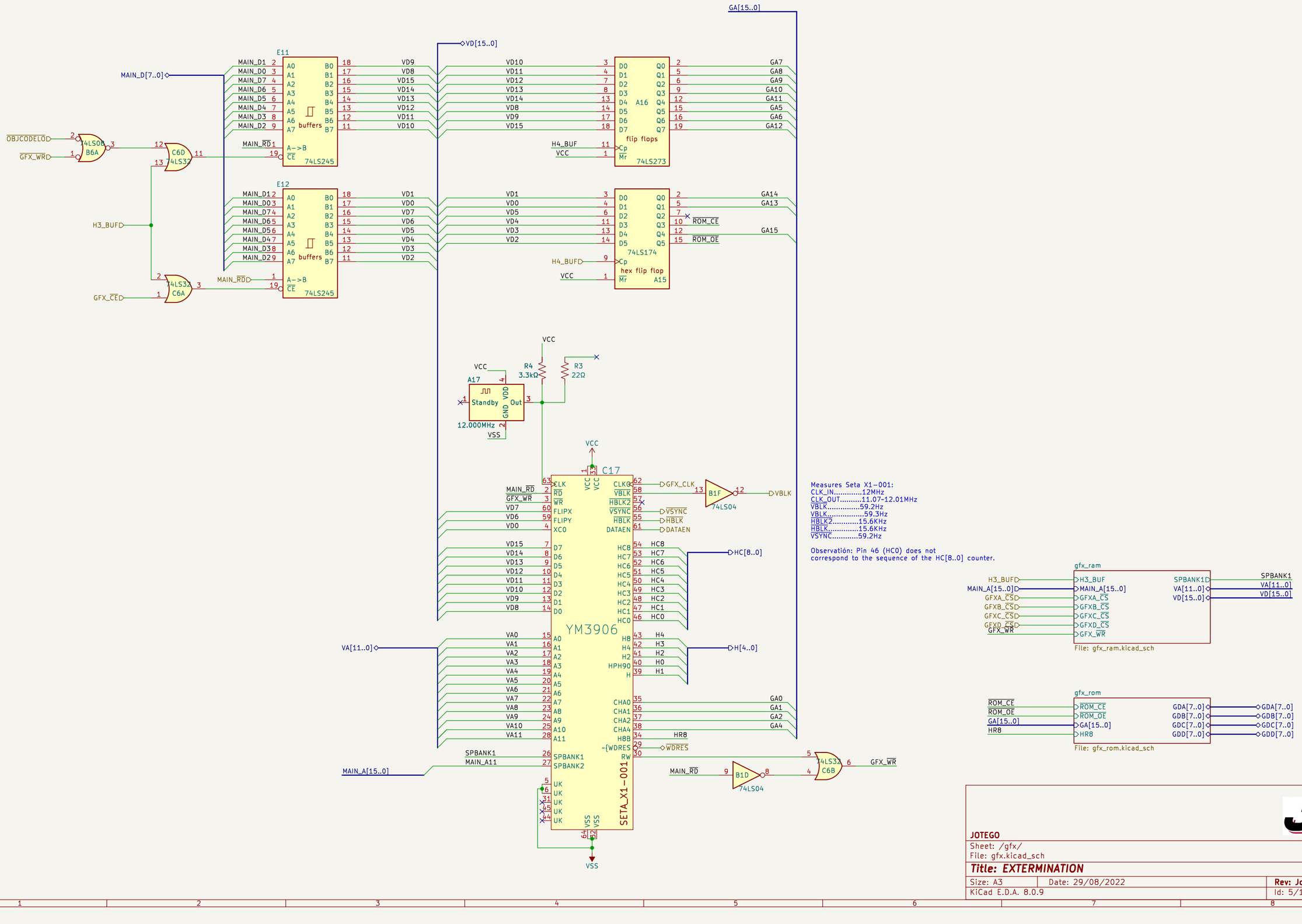
GA[15..0]
VD[15..0]
E11
E12
MAIN_D[7..0]
OBJCODELO
GFX_WR
H3_BUF
GFX_CE
74LS08 B6A
C6D 74LS32
C6A 74LS32
buffers
A->B
74LS245
74LS273
flip flops
A16
74LS174
hex flip flop
A15
H4_BUF
VCC
ROM_CE
ROM_OE
GA14
GA13
GA15
R4 3.3kΩ
R3 22Ω
A17
Standby
VDD
GND
Out
12.000MHz
VSS
C17
YM3906
SETA_X1-001
GFX_CLK
VBLK
VSYNC
HBLK
DATAEN
HC[8..0]
H[4..0]
VA[11..0]
MAIN_A[15..0]
SPBANK1
MAIN_A11
WDRES
HR8
GA0
GA1
GA2
GA4
B1F
B1D
74LS04
74LS32 C6B
GFX_WR
Measures Seta X1-001:
CLK_IN.....12MHz
CLK_OUT.....11.07-12.01MHz
VBLK.....59.2Hz
VBLK.....59.3Hz
HBLK2.....15.6KHz
HBLK.....15.6KHz
VSYNC.....59.2Hz
Observatión: Pin 46 (HC0) does not
correspond to the sequence of the HC[8..0] counter.
gfx_ram
File: gfx_ram.kicad_sch
gfx_rom
File: gfx_rom.kicad_sch
JOTEGO
Sheet: /gfx/
File: gfx.kicad_sch
Title: EXTERMINATION
Size: A3
Date: 29/08/2022
Rev: José Tejada G.
KiCad E.D.A. 8.0.9
Id: 5/10

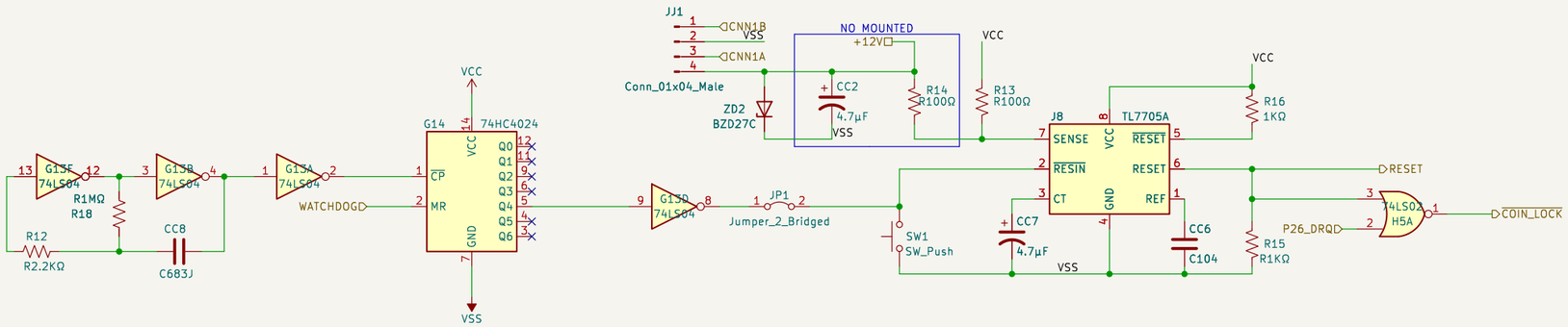

JOTEGO

Sheet: /watchdog/		
File: watchdog.kicad_sch		
Title: EXTERMINATION		
Size: A3	Date: 29/08/2022	**Rev: José Tejada G.**
KiCad E.D.A. 8.0.9		Id: 6/10

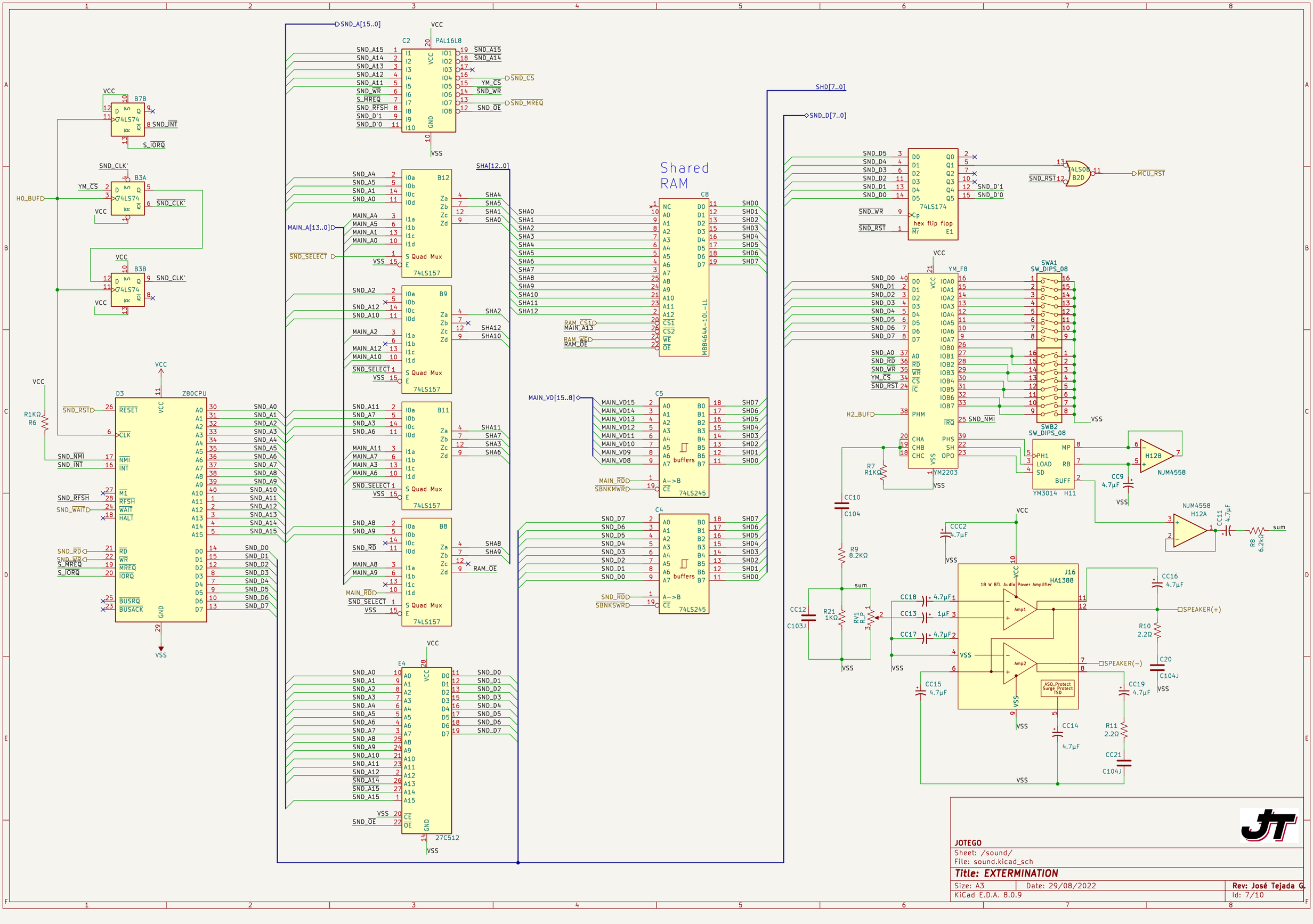

JOTEGO

Sheet: /sound/

File: sound.kicad_sch

Title: EXTERMINATION

Size: A3 | Date: 29/08/2022 | Rev: José Tejada G.

KiCad E.D.A. 8.0.9 | Id: 7/10

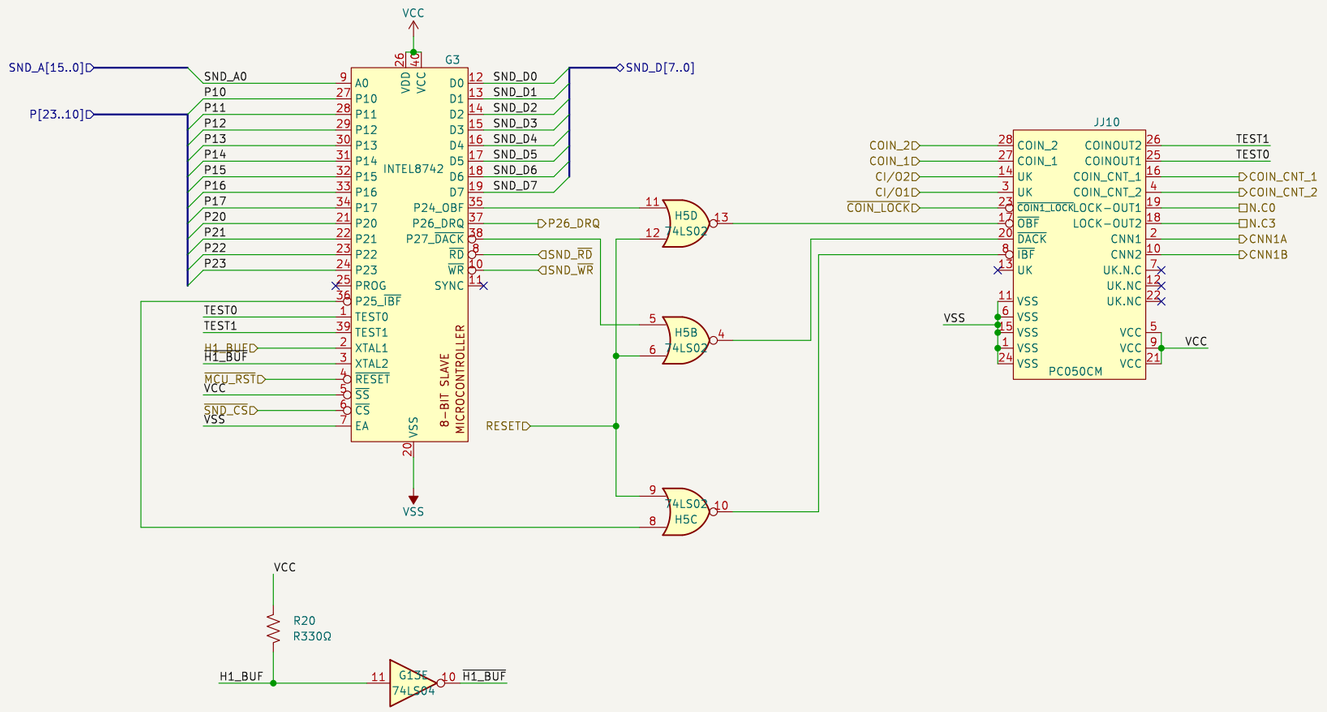

JOTEGO		
Sheet: /mcu/		
File: mcu.kicad_sch		
Title: EXTERMINATION		
Size: A3	Date: 29/08/2022	**Rev: José Tejada G.**
KiCad E.D.A. 8.0.9		Id: 8/10

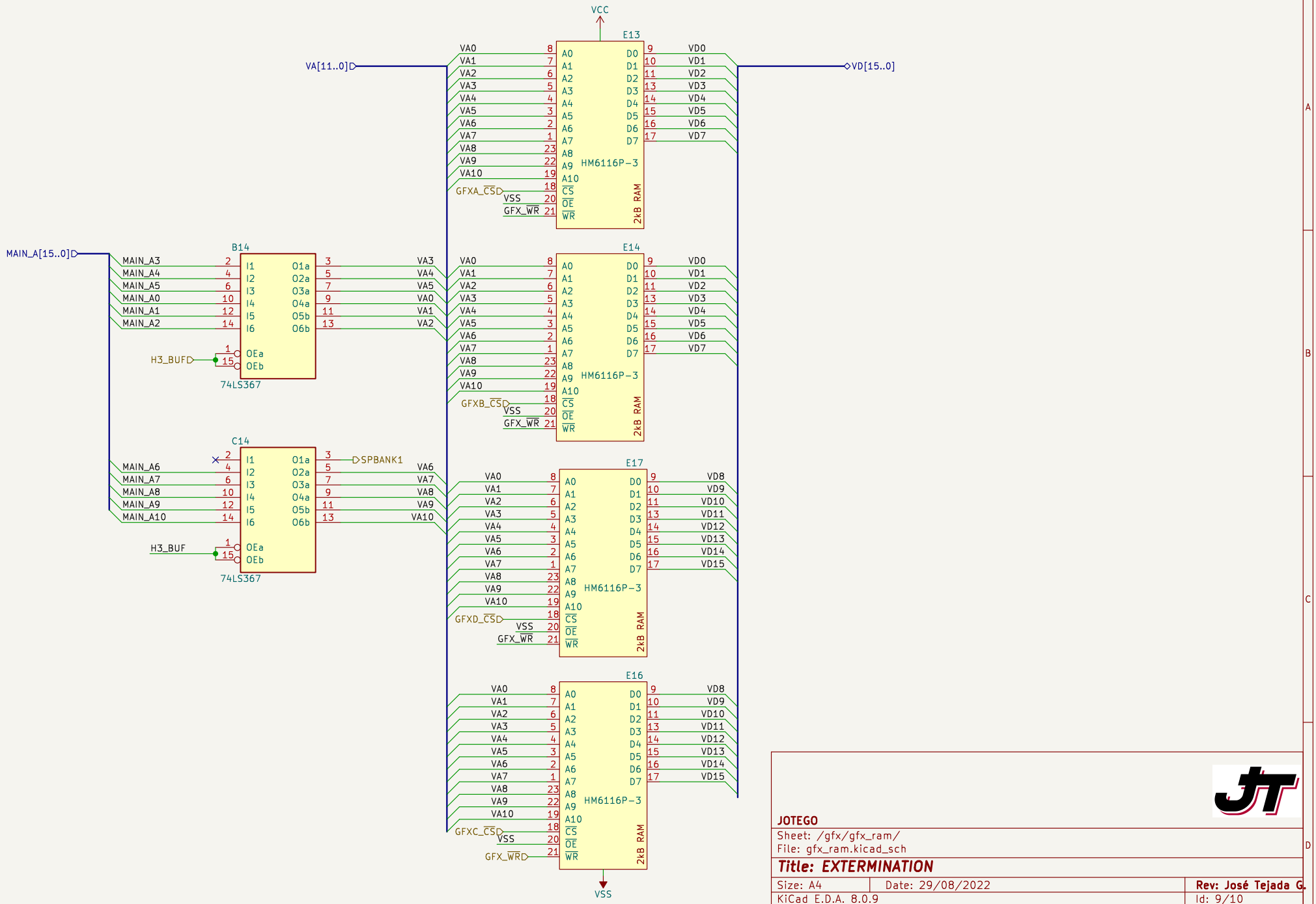
VCC
VA[11..0]
VD[15..0]
E13
E14
E17
E16
HM6116P-3
2kB RAM
GFXA_CS
GFXB_CS
GFXD_CS
GFXC_CS
GFX_WR
GFX_WRD
VSS
B14
C14
74LS367
H3_BUF
MAIN_A[15..0]
MAIN_A3
MAIN_A4
MAIN_A5
MAIN_A0
MAIN_A1
MAIN_A2
MAIN_A6
MAIN_A7
MAIN_A8
MAIN_A9
MAIN_A10
SPBANK1
JOTEGO
Sheet: /gfx/gfx_ram/
File: gfx_ram.kicad_sch
Title: EXTERMINATION
Size: A4
Date: 29/08/2022
KiCad E.D.A. 8.0.9
Rev: José Tejada G.
Id: 9/10

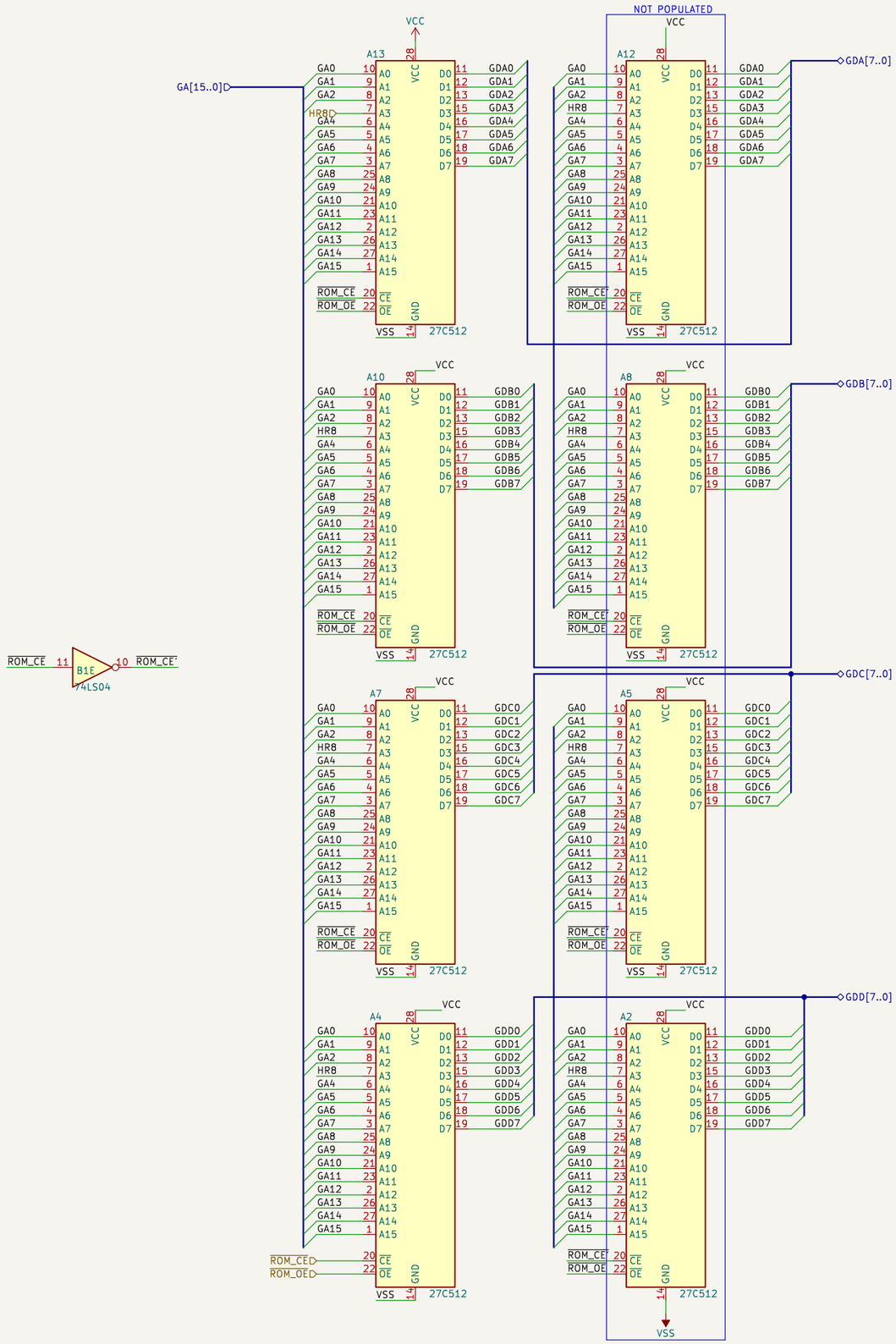

JOTEGO

Sheet: /gfx/gfx_rom/

File: gfx_rom.kicad_sch

Title: EXTERMINATION

Size: A3	Date: 29/08/2022	**Rev: José Tejada G.**
KiCad E.D.A. 8.0.9		Id: 10/10