LY-CAM-G005A

Modification records

	Version	Date	Modification	Name	Check
1	VER A	2023/04/28	New	许辉	

<Variant Name>

Title VER A		
Size C	Document Number LY-SGM-F008A	Rev A
Date: Saturday, May 25, 2024	Sheet 1 of 19	

<Variant Name>

Title BLOCK DIAGRAM		
Size C	Document Number LY-SGM-A001A	Rev A
Date: Saturday, May 25, 2024	Sheet 2 of 19	

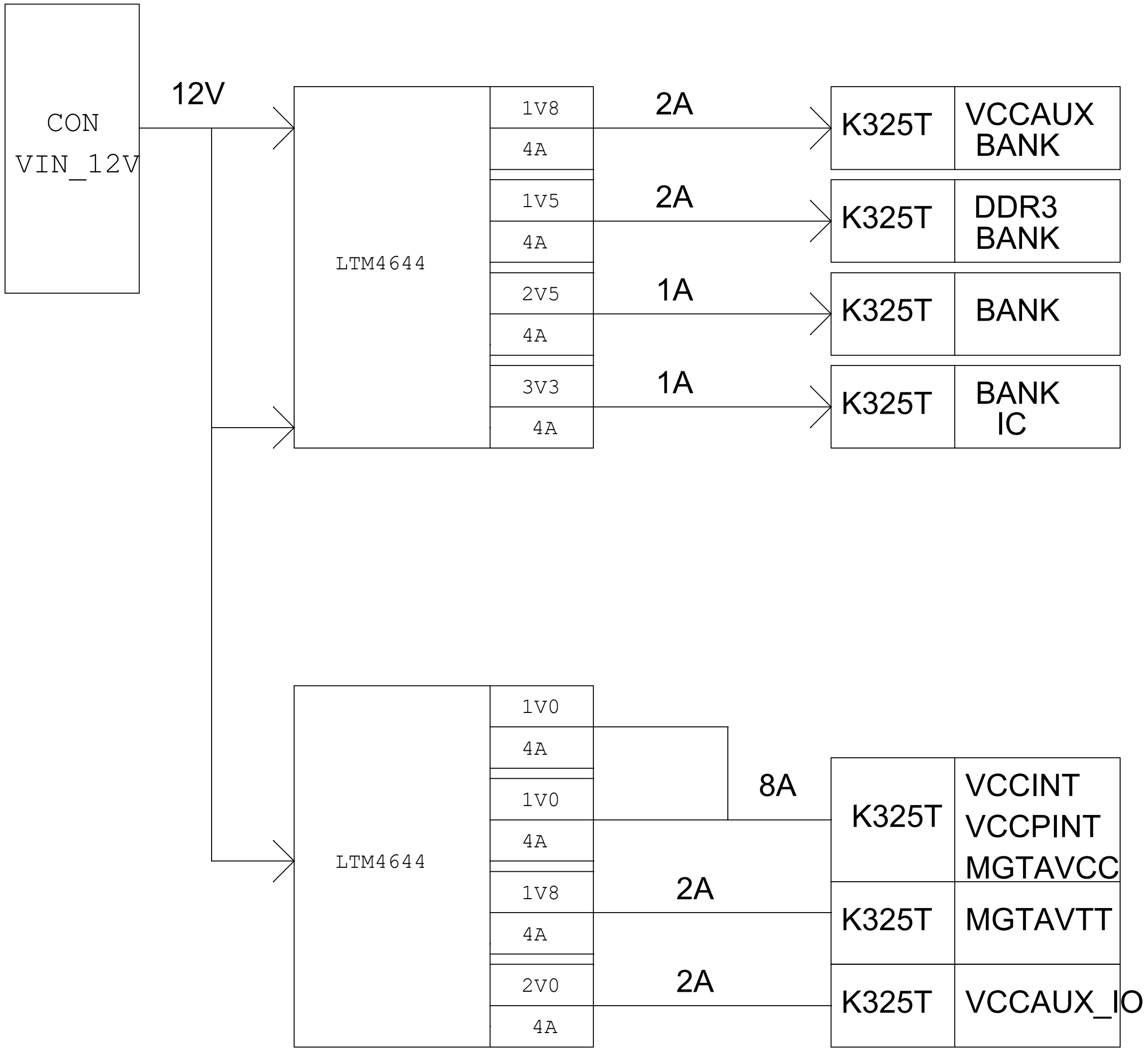
CON
VIN_12V
12V
LTM4644
1V8
4A
1V5
4A
2V5
4A
3V3
4A
2A
2A
1A
1A
K325T
VCCAUX BANK
K325T
DDR3 BANK
K325T
BANK
K325T
BANK IC
LTM4644
1V0
4A
1V0
4A
1V8
4A
2V0
4A
8A
2A
2A
K325T
VCCINT
VCCPINT
MGTAVCC
K325T
MGTAVTT
K325T
VCCAUX_IO

<Variant Name>

Title POWER TREE		
Size C	Document Number LY-SGM-A001A	Rev A
Date: Saturday, May 25, 2024	Sheet 3 of 19	

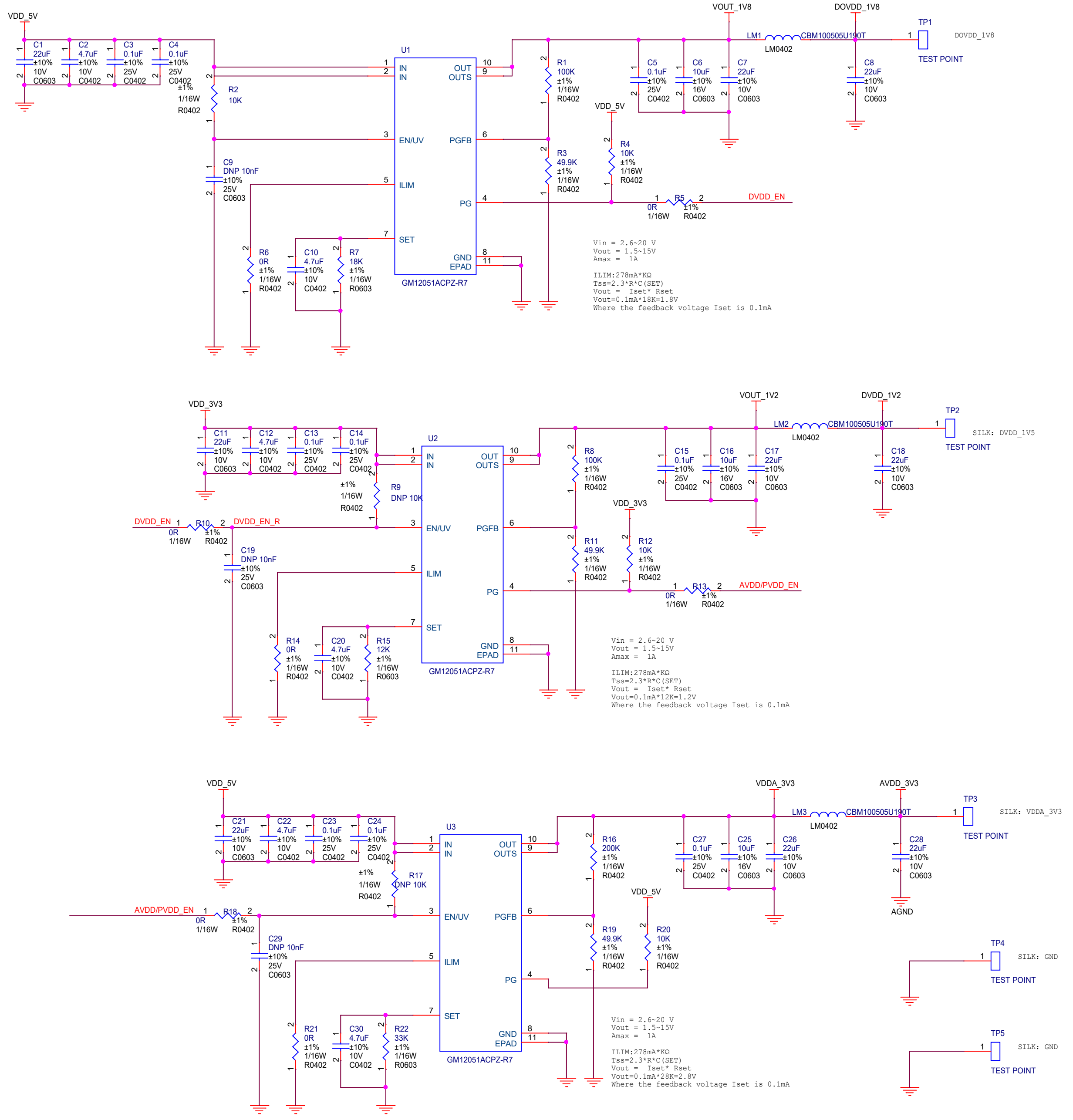
VDD_5V
C1 22uF ±10% 10V C0603
C2 4.7uF ±10% 10V C0402
C3 0.1uF ±10% 25V C0402
C4 0.1uF ±10% 25V C0402
R2 10K ±1% 1/16W R0402
C9 DNP 10nF ±10% 25V C0603
R6 0R ±1% 1/16W R0402
C10 4.7uF ±10% 10V C0402
R7 18K ±1% 1/16W R0603
U1
IN
IN
EN/UV
ILIM
SET
OUT
OUTS
PGFB
PG
GND
EPAD
GM12051ACPZ-R7
VOUT_1V8
DOVDD_1V8
R1 100K ±1% 1/16W R0402
R3 49.9K ±1% 1/16W R0402
VDD_5V
R4 10K ±1% 1/16W R0402
R5 0R ±1% 1/16W R0402
DVDD_EN
C5 0.1uF ±10% 25V C0402
C6 10uF ±10% 16V C0603
C7 22uF ±10% 10V C0603
LM1 LM0402 CBM100505U190T
C8 22uF ±10% 10V C0603
TP1
TEST POINT
DOVDD_1V8
VDD_3V3
C11 22uF ±10% 10V C0603
C12 4.7uF ±10% 10V C0402
C13 0.1uF ±10% 25V C0402
C14 0.1uF ±10% 25V C0402
R9 DNP 10K ±1% 1/16W R0402
DVDD_EN
R10 0R ±1% 1/16W R0402
DVDD_EN_R
C19 DNP 10nF ±10% 25V C0603
R14 0R ±1% 1/16W R0402
C20 4.7uF ±10% 10V C0402
R15 12K ±1% 1/16W R0603
U2
GM12051ACPZ-R7
VOUT_1V2
DVDD_1V2
R8 100K ±1% 1/16W R0402
R11 49.9K ±1% 1/16W R0402
VDD_3V3
R12 10K ±1% 1/16W R0402
R13 0R ±1% 1/16W R0402
AVDD/PVDD_EN
C15 0.1uF ±10% 25V C0402
C16 10uF ±10% 16V C0603
C17 22uF ±10% 10V C0603
LM2 LM0402 CBM100505U190T
C18 22uF ±10% 10V C0603
TP2
TEST POINT
SILK: DVDD_1V5
VDD_5V
C21 22uF ±10% 10V C0603
C22 4.7uF ±10% 10V C0402
C23 0.1uF ±10% 25V C0402
C24 0.1uF ±10% 25V C0402
R17 DNP 10K ±1% 1/16W R0402
AVDD/PVDD_EN
R18 0R ±1% 1/16W R0402
C29 DNP 10nF ±10% 25V C0603
R21 0R ±1% 1/16W R0402
C30 4.7uF ±10% 10V C0402
R22 33K ±1% 1/16W R0603
U3
GM12051ACPZ-R7
VDDA_3V3
AVDD_3V3
R16 200K ±1% 1/16W R0402
R19 49.9K ±1% 1/16W R0402
VDD_5V
R20 10K ±1% 1/16W R0402
C27 0.1uF ±10% 25V C0402
C25 10uF ±10% 16V C0603
C26 22uF ±10% 10V C0603
LM3 LM0402 CBM100505U190T
C28 22uF ±10% 10V C0603
AGND
TP3
TEST POINT
SILK: VDDA_3V3
TP4
TEST POINT
SILK: GND
TP5
TEST POINT
SILK: GND

Vin = 2.6~20 V
Vout = 1.5~15V
Amax = 1A

ILIM:278mA*KΩ
Tss=2.3*R*C(SET)
Vout = Iset* Rset
Vout=0.1mA*18K=1.8V
Where the feedback voltage Iset is 0.1mA

Vin = 2.6~20 V
Vout = 1.5~15V
Amax = 1A

ILIM:278mA*KΩ
Tss=2.3*R*C(SET)
Vout = Iset* Rset
Vout=0.1mA*12K=1.2V
Where the feedback voltage Iset is 0.1mA

Vin = 2.6~20 V
Vout = 1.5~15V
Amax = 1A

ILIM:278mA*KΩ
Tss=2.3*R*C(SET)
Vout = Iset* Rset
Vout=0.1mA*28K=2.8V
Where the feedback voltage Iset is 0.1mA

POWER ON : VDD_5V0 --> VDDIO_1V8 --> DVDD_1V2-->AVDD_3V3

<Variant Name>

Title
MAIN PWR

Size C
Document Number LY-SEN-A001A
Rev A

Date: Saturday, May 25, 2024
Sheet 4 of 19

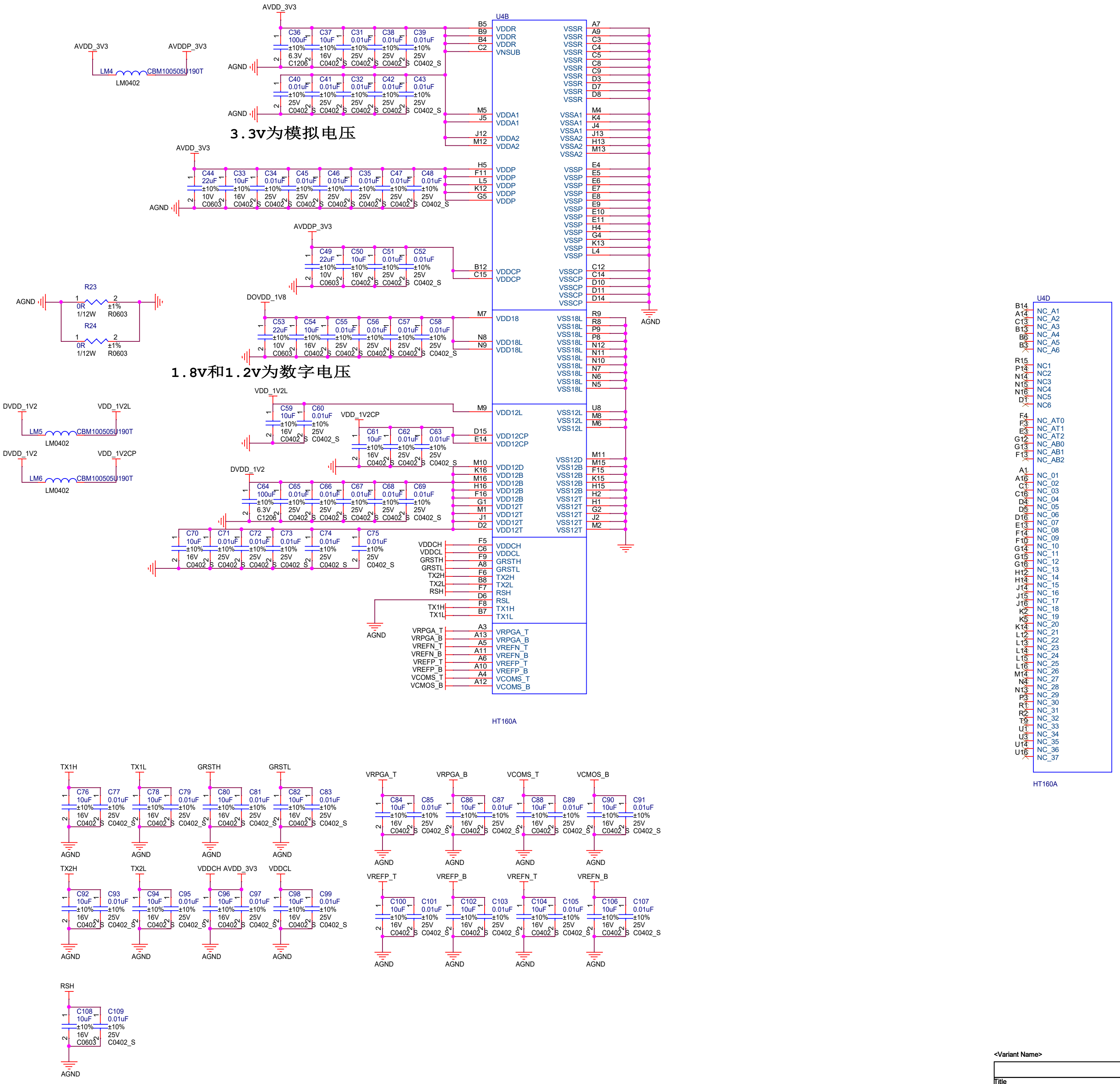
3.3V为模拟电压
1.8V和1.2V为数字电压
U4B
U4D
HT160A
HT160A
AVDD_3V3
AVDDP_3V3
AVDDP_3V3
DOVDD_1V8
VDD_1V2L
VDD_1V2CP
DVDD_1V2
DVDD_1V2
DVDD_1V2
VDD_1V2L
VDD_1V2CP
AGND
LM4
LM5
LM6
CBM100505U190T
LM0402
R23
R24
0R
1/12W
±1%
R0603
VDDR
VNSUB
VDDA1
VDDA2
VDDP
VDDCP
VDD18
VDD18L
VDD12L
VDD12CP
VDD12D
VDD12B
VDD12T
VSSR
VSSA1
VSSA2
VSSP
VSSCP
VSS18L
VSS12L
VSS12D
VSS12B
VSS12T
VDDCH
VDDCL
GRSTH
GRSTL
TX2H
TX2L
RSH
RSL
TX1H
TX1L
VRPGA_T
VRPGA_B
VREFN_T
VREFN_B
VREFP_T
VREFP_B
VCOMS_T
VCOMS_B
NC_A1
NC_A2
NC_A3
NC_A4
NC_A5
NC_A6
NC1
NC2
NC3
NC4
NC5
NC6
NC_AT0
NC_AT1
NC_AT2
NC_AB0
NC_AB1
NC_AB2
NC_01 … NC_37
C36 100uF ±10% 6.3V C1206
10uF ±10% 16V C0402_S
0.01uF ±10% 25V C0402_S
22uF ±10% 10V C0603
C108 10uF ±10% 16V C0603
C109 0.01uF ±10% 25V C0402_S

<Variant Name>

Title
SENSOR

Size	Document Number	Rev
C	LY-SEN-A001A	A

Date: Saturday, May 25, 2024 Sheet 5 of 19

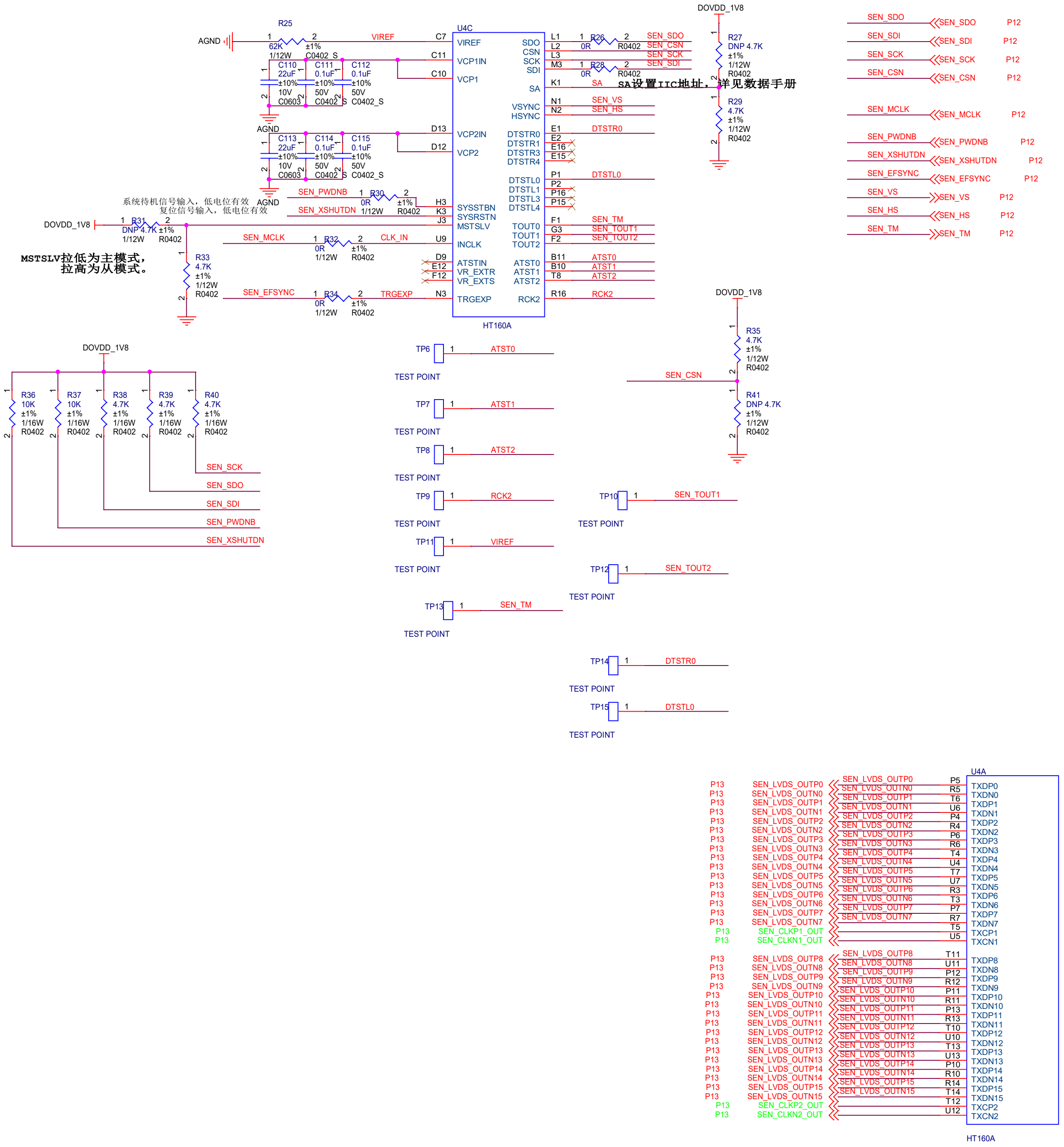
U4C
HT160A
AGND
R25 62K 1/12W ±1% C0402_S
VIREF
C7 C11 C10
VIREF
VCP1IN
VCP1
C110 22uF ±10% 10V C0603
C111 0.1uF ±10% 50V C0402_S
C112 0.1uF ±10% 50V C0402_S
C113 22uF ±10% 10V C0603
C114 0.1uF ±10% 50V C0402_S
C115 0.1uF ±10% 50V C0402_S
D13 D12
VCP2IN
VCP2
SEN_PWDNB
R30 0R ±1% 1/12W R0402
SEN_XSHUTDN
H3 K3 J3
SYSSTBN
SYSRSTN
MSTSLV
系统待机信号输入，低电位有效
复位信号输入，低电位有效
DOVDD_1V8
R31 DNP 4.7K ±1% 1/12W R0402
SEN_MCLK
R32 0R ±1% 1/12W R0402
CLK_IN
U9
INCLK
MSTSLV拉低为主模式，
拉高为从模式。
R33 4.7K ±1% 1/12W R0402
D9 E12 F12
ATSTIN
VR_EXTR
VR_EXTS
SEN_EFSYNC
R34 0R ±1% 1/12W R0402
TRGEXP
N3
TRGEXP
SDO CSN SCK SDI
SA
VSYNC HSYNC
DTSTR0 DTSTR1 DTSTR3 DTSTR4
DTSTL0 DTSTL1 DTSTL3 DTSTL4
TOUT0 TOUT1 TOUT2
ATST0 ATST1 ATST2
RCK2
L1 L2 L3 M3 K1 N1 N2 E1 E2 E16 E15 P1 P2 P16 P15 F1 G3 F2 B11 B10 T8 R16
R26 0R R0402
R28 0R R0402
SEN_SDO SEN_CSN SEN_SCK SEN_SDI
SA
SA设置IIC地址，详见数据手册
SEN_VS SEN_HS
DTSTR0
DTSTL0
SEN_TM SEN_TOUT1 SEN_TOUT2
ATST0 ATST1 ATST2
RCK2
R27 DNP 4.7K ±1% 1/12W R0402
R29 4.7K ±1% 1/12W R0402
SEN_SDO P12
SEN_SDI P12
SEN_SCK P12
SEN_CSN P12
SEN_MCLK P12
SEN_PWDNB P12
SEN_XSHUTDN P12
SEN_EFSYNC P12
SEN_VS P12
SEN_HS P12
SEN_TM P12
R36 10K ±1% 1/16W R0402
R37 10K ±1% 1/16W R0402
R38 4.7K ±1% 1/16W R0402
R39 4.7K ±1% 1/16W R0402
R40 4.7K ±1% 1/16W R0402
SEN_SCK
SEN_SDO
SEN_SDI
SEN_PWDNB
SEN_XSHUTDN
R35 4.7K ±1% 1/12W R0402
SEN_CSN
R41 DNP 4.7K ±1% 1/12W R0402
TP6 ATST0 TEST POINT
TP7 ATST1 TEST POINT
TP8 ATST2 TEST POINT
TP9 RCK2 TEST POINT
TP10 SEN_TOUT1 TEST POINT
TP11 VIREF TEST POINT
TP12 SEN_TOUT2 TEST POINT
TP13 SEN_TM TEST POINT
TP14 DTSTR0 TEST POINT
TP15 DTSTL0 TEST POINT
U4A
HT160A
P13 SEN_LVDS_OUTP0 … SEN_LVDS_OUTN15
P13 SEN_CLKP1_OUT
P13 SEN_CLKN1_OUT
P13 SEN_CLKP2_OUT
P13 SEN_CLKN2_OUT
P5 R5 T6 U6 P4 R4 P6 R6 T4 U4 T7 U7 R3 T3 P7 R7 T5 U5
T11 U11 P12 R12 P11 R11 P13 R13 T10 U10 T13 U13 P10 R10 R14 T14 T12 U12
TXDP0 TXDN0 TXDP1 TXDN1 TXDP2 TXDN2 TXDP3 TXDN3 TXDP4 TXDN4 TXDP5 TXDN5 TXDP6 TXDN6 TXDP7 TXDN7 TXCP1 TXCN1
TXDP8 TXDN8 TXDP9 TXDN9 TXDP10 TXDN10 TXDP11 TXDN11 TXDP12 TXDN12 TXDP13 TXDN13 TXDP14 TXDN14 TXDP15 TXDN15 TXCP2 TXCN2

<Variant Name>

Title
CONNECTOR

Size C
Document Number LY-SEN-A001A
Rev A

Date: Saturday, May 25, 2024
Sheet 6 of 19

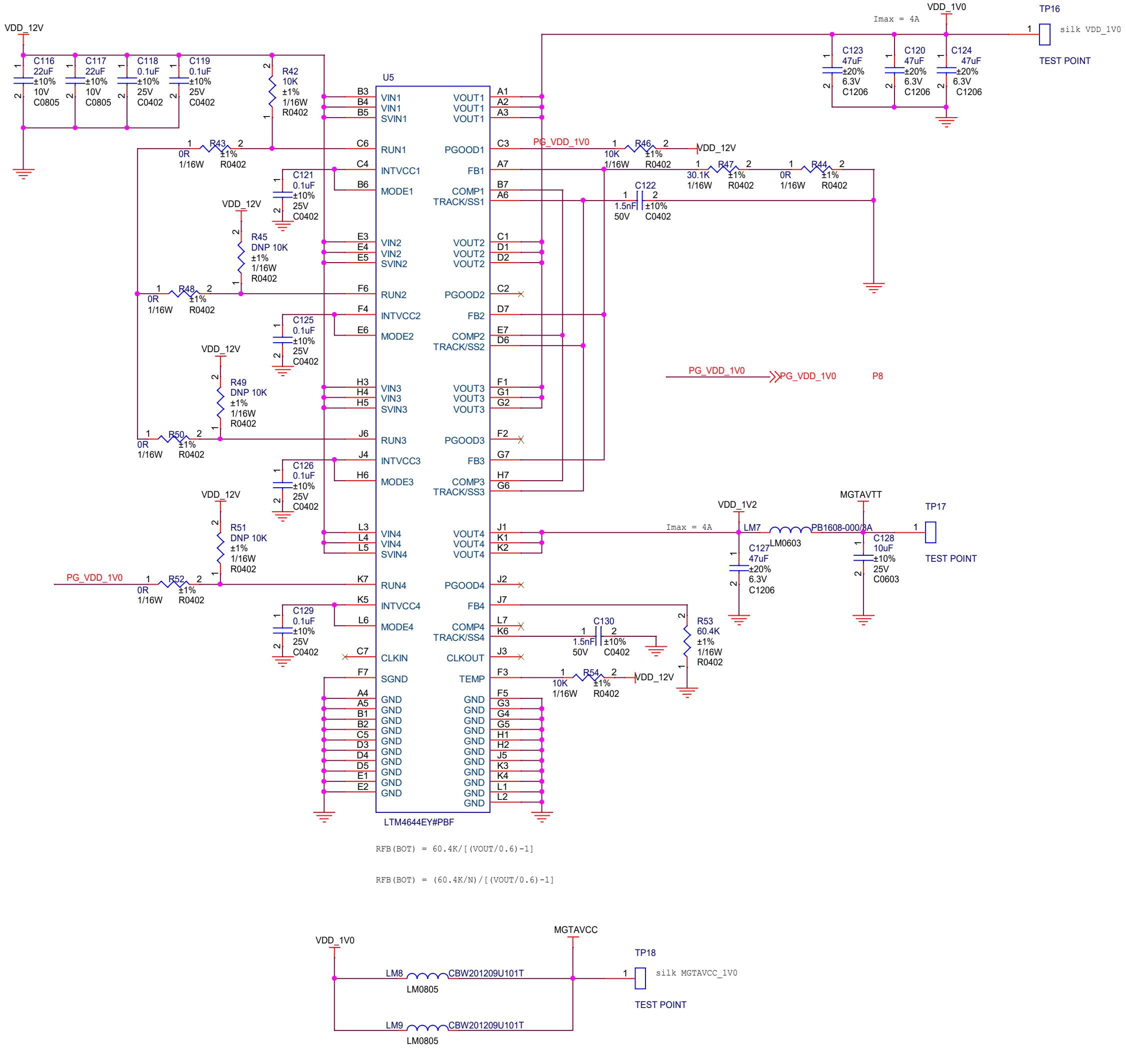
VDD_12V
C116 22uF ±10% 10V C0805
C117 22uF ±10% 10V C0805
C118 0.1uF ±10% 25V C0402
C119 0.1uF ±10% 25V C0402
R42 10K ±1% 1/16W R0402
U5
R43 0R ±1% 1/16W R0402
C121 0.1uF ±10% 25V C0402
R45 DNP 10K ±1% 1/16W R0402
R48 0R ±1% 1/16W R0402
C125 0.1uF ±10% 25V C0402
R49 DNP 10K ±1% 1/16W R0402
R50 0R ±1% 1/16W R0402
C126 0.1uF ±10% 25V C0402
R51 DNP 10K ±1% 1/16W R0402
PG_VDD_1V0
R52 0R ±1% 1/16W R0402
C129 0.1uF ±10% 25V C0402
VIN1 VIN1 SVIN1 RUN1 INTVCC1 MODE1
VIN2 VIN2 SVIN2 RUN2 INTVCC2 MODE2
VIN3 VIN3 SVIN3 RUN3 INTVCC3 MODE3
VIN4 VIN4 SVIN4 RUN4 INTVCC4 MODE4
CLKIN SGND GND
VOUT1 VOUT1 VOUT1 PGOOD1 FB1 COMP1 TRACK/SS1
VOUT2 VOUT2 VOUT2 PGOOD2 FB2 COMP2 TRACK/SS2
VOUT3 VOUT3 VOUT3 PGOOD3 FB3 COMP3 TRACK/SS3
VOUT4 VOUT4 VOUT4 PGOOD4 FB4 COMP4 TRACK/SS4
CLKOUT TEMP
LTM4644EY#PBF
Imax = 4A
VDD_1V0
TP16 silk VDD_1V0 TEST POINT
C123 47uF ±20% 6.3V C1206
C120 47uF ±20% 6.3V C1206
C124 47uF ±20% 6.3V C1206
PG_VDD_1V0
R46 10K ±1% 1/16W R0402
R47 30.1K ±1% 1/16W R0402
R44 0R ±1% 1/16W R0402
C122 1.5nF ±10% 50V C0402
PG_VDD_1V0 P8
VDD_1V2
Imax = 4A
MGTAVTT
TP17 TEST POINT
LM7 LM0603 PB1608-000/3A
C127 47uF ±20% 6.3V C1206
C128 10uF ±10% 25V C0603
C130 1.5nF ±10% 50V C0402
R53 60.4K ±1% 1/16W R0402
R54 10K ±1% 1/16W R0402
RFB(BOT) = 60.4K/[(VOUT/0.6)-1]
RFB(BOT) = (60.4K/N)/[(VOUT/0.6)-1]
VDD_1V0
MGTAVCC
LM8 CBW201209U101T LM0805
LM9 CBW201209U101T LM0805
TP18 silk MGTAVCC_1V0 TEST POINT

<Variant Name>

Title	MAIN PWR	
Size C	Document Number LY-SGM-A001A	Rev A
Date: Saturday, May 25, 2024	Sheet 7 of 19	

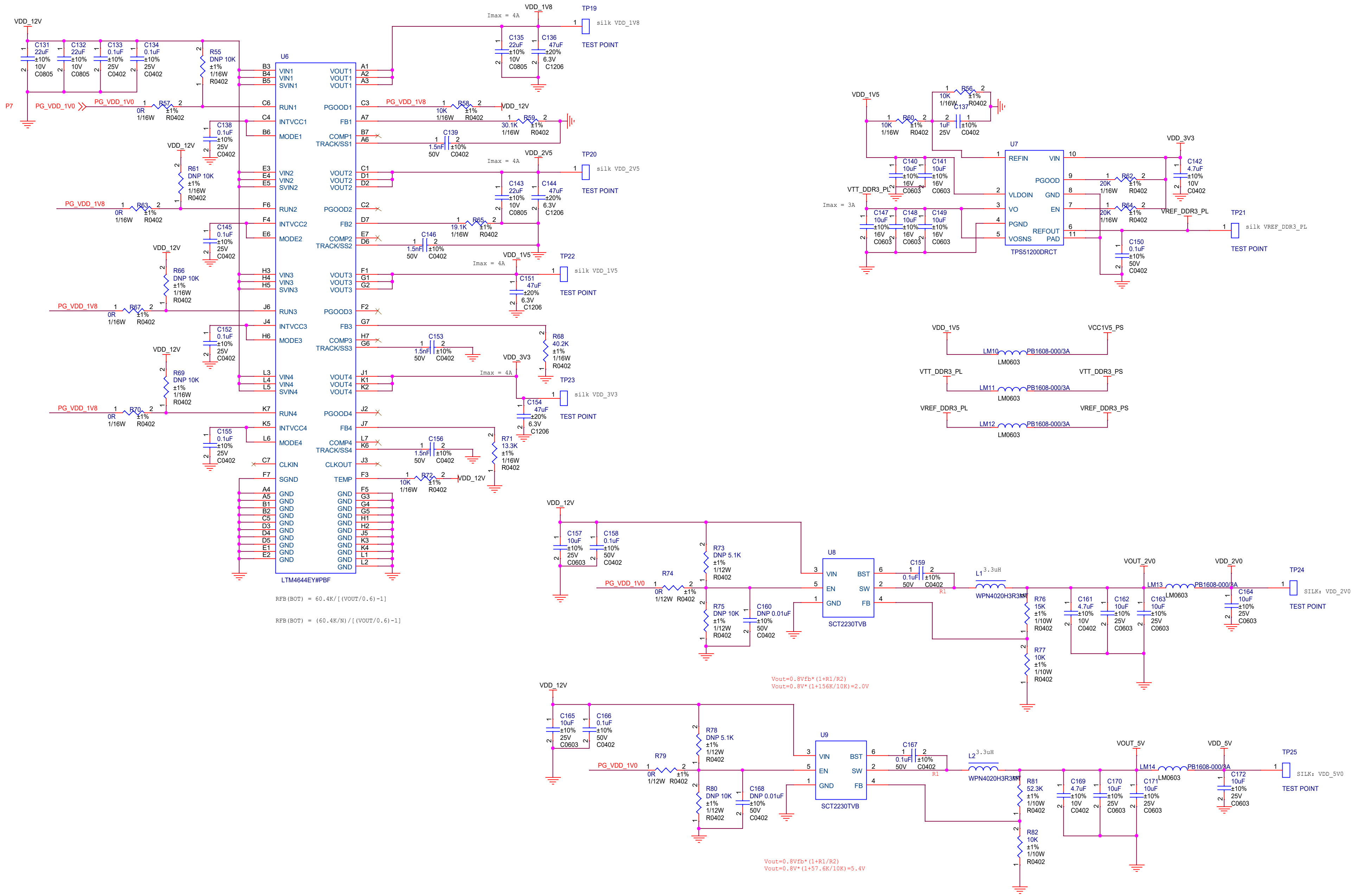
VDD_12V
C131 22uF ±10% 10V C0805
C132 22uF ±10% 10V C0805
C133 0.1uF ±10% 25V C0402
C134 0.1uF ±10% 25V C0402
R55 DNP 10K ±1% 1/16W R0402
U6
LTM4644EY#PBF
VIN1 VIN1 SVIN1 RUN1 INTVCC1 MODE1
VIN2 VIN2 SVIN2 RUN2 INTVCC2 MODE2
VIN3 VIN3 SVIN3 RUN3 INTVCC3 MODE3
VIN4 VIN4 SVIN4 RUN4 INTVCC4 MODE4
CLKIN SGND GND
VOUT1 PGOOD1 FB1 COMP1 TRACK/SS1
VOUT2 PGOOD2 FB2 COMP2 TRACK/SS2
VOUT3 PGOOD3 FB3 COMP3 TRACK/SS3
VOUT4 PGOOD4 FB4 COMP4 TRACK/SS4
CLKOUT TEMP
P7
PG_VDD_1V0
R57 0R ±1% 1/16W R0402
C138 0.1uF ±10% 25V C0402
R61 DNP 10K ±1% 1/16W R0402
PG_VDD_1V8
R63 0R ±1% 1/16W R0402
C145 0.1uF ±10% 25V C0402
R66 DNP 10K ±1% 1/16W R0402
R67 0R ±1% 1/16W R0402
C152 0.1uF ±10% 25V C0402
R69 DNP 10K ±1% 1/16W R0402
R70 0R ±1% 1/16W R0402
C155 0.1uF ±10% 25V C0402
VDD_1V8
Imax = 4A
C135 22uF ±10% 10V C0805
C136 47uF ±20% 6.3V C1206
TP19
silk VDD_1V8
TEST POINT
R58 10K ±1% 1/16W R0402
R59 30.1K ±1% 1/16W R0402
C139 1.5nF ±10% 50V C0402
VDD_2V5
C143 22uF ±10% 10V C0805
C144 47uF ±20% 6.3V C1206
TP20
silk VDD_2V5
R65 19.1K ±1% 1/16W R0402
C146 1.5nF ±10% 50V C0402
VDD_1V5
C151 47uF ±20% 6.3V C1206
TP22
silk VDD_1V5
C153 1.5nF ±10% 50V C0402
R68 40.2K ±1% 1/16W R0402
VDD_3V3
C154 47uF ±20% 6.3V C1206
TP23
silk VDD_3V3
C156 1.5nF ±10% 50V C0402
R71 13.3K ±1% 1/16W R0402
R72 10K ±1% 1/16W R0402
RFB(BOT) = 60.4K/[(VOUT/0.6)-1]
RFB(BOT) = (60.4K/N)/[(VOUT/0.6)-1]
VDD_1V5
R60 10K ±1% 1/16W R0402
R56 10K ±1% 1/16W R0402
C137 1uF ±10% 25V C0402
U7
TPS51200DRCT
REFIN VLDOIN VO PGND VOSNS VIN PGOOD GND EN REFOUT PAD
VTT_DDR3_PL
Imax = 3A
C140 10uF ±10% 16V C0603
C141 10uF ±10% 16V C0603
C147 10uF ±10% 16V C0603
C148 10uF ±10% 16V C0603
C149 10uF ±10% 16V C0603
VDD_3V3
C142 4.7uF ±10% 10V C0402
R62 20K ±1% 1/16W R0402
R64 20K ±1% 1/16W R0402
VREF_DDR3_PL
C150 0.1uF ±10% 50V C0402
TP21
silk VREF_DDR3_PL
VDD_1V5 VCC1V5_PS
LM10 PB1608-000/3A LM0603
VTT_DDR3_PL VTT_DDR3_PS
LM11 PB1608-000/3A LM0603
VREF_DDR3_PL VREF_DDR3_PS
LM12 PB1608-000/3A LM0603
VDD_12V
C157 10uF ±10% 25V C0603
C158 0.1uF ±10% 50V C0402
R73 DNP 5.1K ±1% 1/12W R0402
R74 0R ±1% 1/12W R0402
R75 DNP 10K ±1% 1/12W R0402
C160 DNP 0.01uF ±10% 50V C0402
U8
SCT2230TVB
VIN EN GND BST SW FB
C159 0.1uF ±10% 50V C0402
L1 3.3uH WPN4020H3R3MT
R1
R76 15K ±1% 1/10W R0402
R77 10K ±1% 1/10W R0402
VOUT_2V0
C161 4.7uF ±10% 10V C0402
C162 10uF ±10% 25V C0603
C163 10uF ±10% 25V C0603
LM13 PB1608-000/3A LM0603
VDD_2V0
C164 10uF ±10% 25V C0603
TP24
SILK: VDD_2V0
Vout=0.8Vfb*(1+R1/R2)
Vout=0.8V*(1+156K/10K)=2.0V
VDD_12V
C165 10uF ±10% 25V C0603
C166 0.1uF ±10% 50V C0402
R78 DNP 5.1K ±1% 1/12W R0402
R79 0R ±1% 1/12W R0402
R80 DNP 10K ±1% 1/12W R0402
C168 DNP 0.01uF ±10% 50V C0402
U9
SCT2230TVB
C167 0.1uF ±10% 50V C0402
L2 3.3uH WPN4020H3R3MT
R81 52.3K ±1% 1/10W R0402
R82 10K ±1% 1/10W R0402
VOUT_5V
C169 4.7uF ±10% 10V C0402
C170 10uF ±10% 25V C0603
C171 10uF ±10% 25V C0603
LM14 PB1608-000/3A LM0603
VDD_5V
C172 10uF ±10% 25V C0603
TP25
SILK: VDD_5V0
Vout=0.8Vfb*(1+R1/R2)
Vout=0.8V*(1+57.6K/10K)=5.4V

PL/PS : VDD_1V0 --> VDD_1V8 /VDD_2V0--> VDD_1V5/2V5/3V3;
GTX : VDD_1V0 == MGTAVCC --> MGTAVTT

<Variant Name>		
Title: GROUP POWER		
Size: C	Document Number: LY-SGM-A001A	Rev: A
Date: Saturday, May 25, 2024	Sheet 8 of 19	

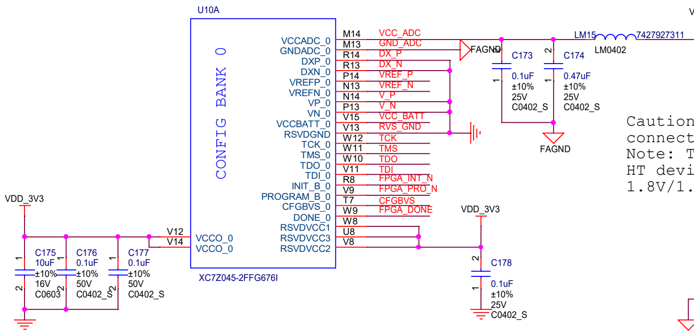
U10A
CONFIG BANK 0
VCCADC_0 M14 VCC_ADC
GNDADC_0 M13 GND_ADC
DXP_0 R14 DX_P
DXN_0 R13 DX_N
VREFP_0 P14 VREF_P
VREFN_0 N13 VREF_N
VP_0 N14 V_P
VN_0 P13 V_N
VCCBATT_0 V15 VCC_BATT
RSVDGND V13 RVS_GND
TCK_0 W12 TCK
TMS_0 W11 TMS
TDO_0 W10 TDO
TDI_0 V11 TDI
INIT_B_0 R8 FPGA_INT_N
PROGRAM_B_0 V9 FPGA_PRO_N
CFGBVS_0 T7 CFGBVS
DONE_0 W9 FPGA_DONE
RSVDVCC1 W8
RSVDVCC3 U8
RSVDVCC2 V8
VCCO_0 V12
VCCO_0 V14
XC7Z045-2FFG676I
FAGND
LM15 7427927311 LM0402
VCCAUX
C173 0.1uF ±10% 25V C0402_S
C174 0.47uF ±10% 25V C0402_S
FAGND
VDD_3V3
C175 10uF ±10% 16V C0603
C176 0.1uF ±10% 50V C0402_S
C177 0.1uF ±10% 50V C0402_S
VDD_3V3
C178 0.1uF ±10% 25V C0402_S

Caution ! To avoid device damage, CFGBVS must be connected correctly to either VCCO_0 or GND.
Note: The CFGBVS pin is not available on Virtex-7 HT devices. Virtex-7 HT devices support only 1.8V/1.5V operation for bank 0.

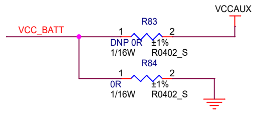
VCC_BATT
VCCAUX
R83 DNP 0R ±1% 1/16W R0402_S
R84 0R ±1% 1/16W R0402_S

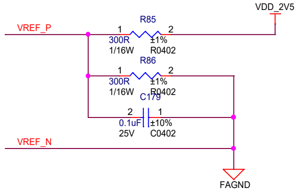
VREF_P
VDD_2V5
R85 300R ±1% 1/16W R0402
R86 300R ±1% 1/16W R0402
C179 0.1uF ±10% 25V C0402
VREF_N
FAGND

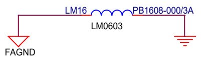
LM16 PB1608-000/3A
LM0603
FAGND

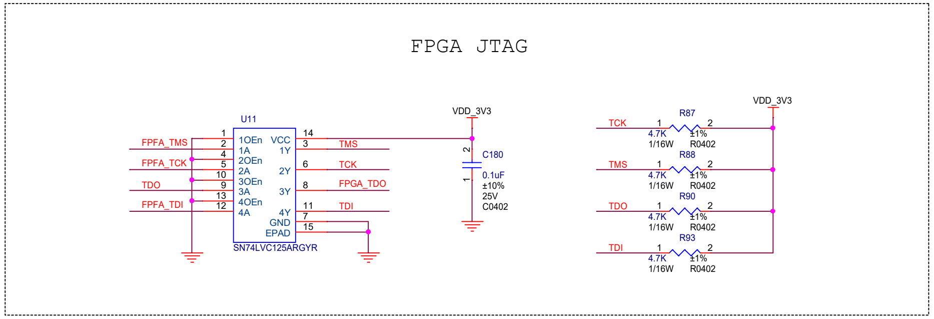
FPGA JTAG
U11
FPFA_TMS
FPFA_TCK
TDO
FPFA_TDI
1OEn 1A 2OEn 2A 3OEn 3A 4OEn 4A
VCC 1Y 2Y 3Y 4Y GND EPAD
TMS
TCK
FPGA_TDO
TDI
SN74LVC125ARGYR
VDD_3V3
C180 0.1uF ±10% 25V C0402
VDD_3V3
TCK R87 4.7K ±1% 1/16W R0402
TMS R88 4.7K ±1% 1/16W R0402
TDO R90 4.7K ±1% 1/16W R0402
TDI R93 4.7K ±1% 1/16W R0402

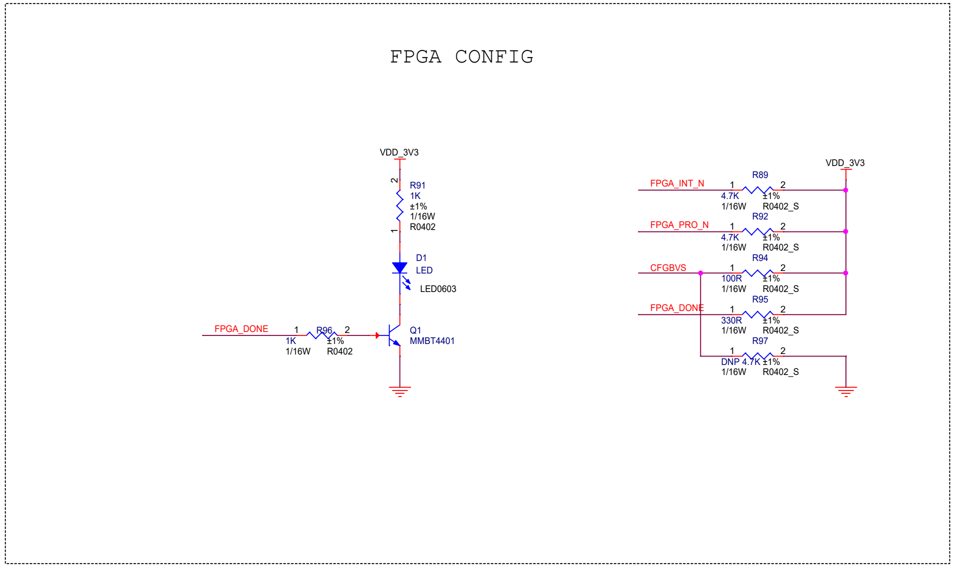
FPGA CONFIG
VDD_3V3
R91 1K ±1% 1/16W R0402
D1 LED LED0603
FPGA_DONE
R96 1K ±1% 1/16W R0402
Q1 MMBT4401
VDD_3V3
FPGA_INT_N R89 4.7K ±1% 1/16W R0402_S
FPGA_PRO_N R92 4.7K ±1% 1/16W R0402_S
CFGBVS R94 100R ±1% 1/16W R0402_S
FPGA_DONE R95 330R ±1% 1/16W R0402_S
R97 DNP 4.7K ±1% 1/16W R0402_S

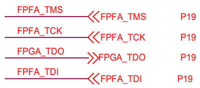
FPFA_TMS FPFA_TMS P19
FPFA_TCK FPFA_TCK P19
FPGA_TDO FPGA_TDO P19
FPFA_TDI FPFA_TDI P19

<Variant Name>

Title
7Z035_BANK0

Size	Document Number	Rev
C	LY-SGM-A001A	A

Date: Saturday, May 25, 2024 Sheet 9 of 19

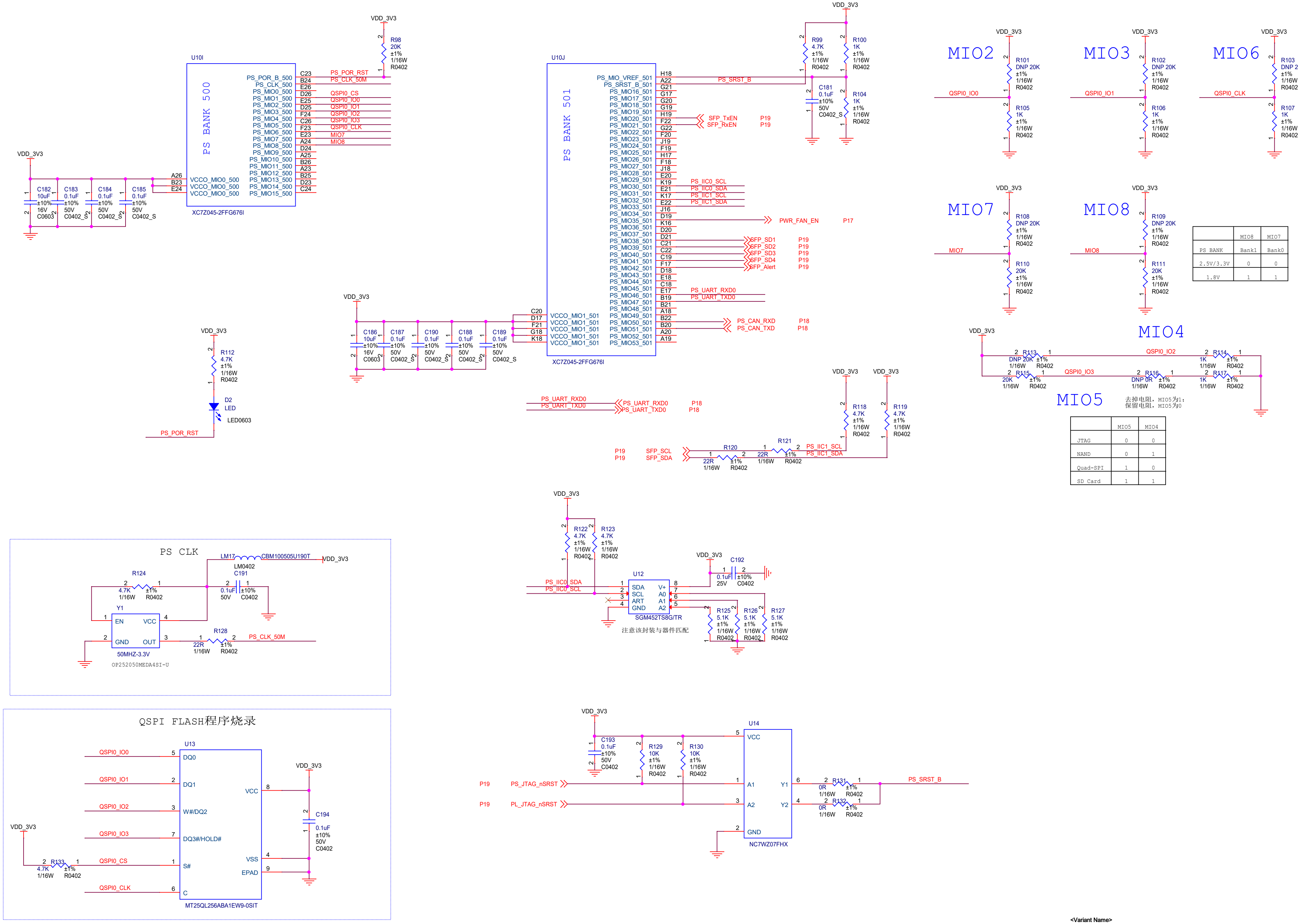
U10I
PS BANK 500
PS_POR_B_500 C23 PS_POR_RST
PS_CLK_500 B24 PS_CLK_50M
PS_MIO0_500 E26
PS_MIO1_500 D26 QSPI0_CS
PS_MIO2_500 E25 QSPI0_IO0
PS_MIO3_500 D25 QSPI0_IO1
PS_MIO4_500 F24 QSPI0_IO2
PS_MIO5_500 C26 QSPI0_IO3
PS_MIO6_500 F23 QSPI0_CLK
PS_MIO7_500 E23 MIO7
PS_MIO8_500 A24 MIO8
PS_MIO9_500 D24
PS_MIO10_500 A25
PS_MIO11_500 B26
PS_MIO12_500 A23
PS_MIO13_500 B25
PS_MIO14_500 D23
PS_MIO15_500 C24
A26 VCCO_MIO0_500
B23 VCCO_MIO0_500
E24 VCCO_MIO0_500
XC7Z045-2FFG676I
VDD_3V3
R98 20K ±1% 1/16W R0402
C182 10uF ±10% 16V C0603
C183 0.1uF ±10% 50V C0402_S
C184 0.1uF ±10% 50V C0402_S
C185 0.1uF ±10% 50V C0402_S
U10J
PS BANK 501
PS_MIO_VREF_501 H18
PS_SRST_B_501 A22 PS_SRST_B
PS_MIO16_501 G21
PS_MIO17_501 G17
PS_MIO18_501 G20
PS_MIO19_501 G19
PS_MIO20_501 H19 SFP_TxEN P19
PS_MIO21_501 F22 SFP_RxEN P19
PS_MIO22_501 G22
PS_MIO23_501 F20
PS_MIO24_501 J19
PS_MIO25_501 F19
PS_MIO26_501 H17
PS_MIO27_501 F18
PS_MIO28_501 J18
PS_MIO29_501 E20
PS_MIO30_501 K19 PS_IIC0_SCL
PS_MIO31_501 E21 PS_IIC0_SDA
PS_MIO32_501 K17 PS_IIC1_SCL
PS_MIO33_501 E22 PS_IIC1_SDA
PS_MIO34_501 J16
PS_MIO35_501 D19 PWR_FAN_EN P17
PS_MIO36_501 K16
PS_MIO37_501 D20
PS_MIO38_501 D21 SFP_SD1 P19
PS_MIO39_501 C21 SFP_SD2 P19
PS_MIO40_501 C22 SFP_SD3 P19
PS_MIO41_501 C19 SFP_SD4 P19
PS_MIO42_501 F17 SFP_Alert P19
PS_MIO43_501 D18
PS_MIO44_501 E18
PS_MIO45_501 C18 PS_UART_RXD0
PS_MIO46_501 E17 PS_UART_TXD0
PS_MIO47_501 B19
PS_MIO48_501 B21
PS_MIO49_501 A18
PS_MIO50_501 B22 PS_CAN_RXD P18
PS_MIO51_501 B20 PS_CAN_TXD P18
PS_MIO52_501 A20
PS_MIO53_501 A19
C20 D17 F21 G18 K18 VCCO_MIO1_501
XC7Z045-2FFG676I
R99 4.7K ±1% 1/16W R0402
R100 1K ±1% 1/16W R0402
C181 0.1uF ±10% 50V C0402_S
R104 1K ±1% 1/16W R0402
C186 10uF ±10% 16V C0603
C187 0.1uF ±10% 50V C0402_S
C190 0.1uF ±10% 50V C0402_S
C188 0.1uF ±10% 50V C0402_S
C189 0.1uF ±10% 50V C0402_S
MIO2
R101 DNP 20K ±1% 1/16W R0402
QSPI0_IO0
R105 1K ±1% 1/16W R0402
MIO3
R102 DNP 20K ±1% 1/16W R0402
QSPI0_IO1
R106 1K ±1% 1/16W R0402
MIO6
R103 DNP 20K ±1% 1/16W R0402
QSPI0_CLK
R107 1K ±1% 1/16W R0402
MIO7
R108 DNP 20K ±1% 1/16W R0402
MIO7
R110 20K ±1% 1/16W R0402
MIO8
R109 DNP 20K ±1% 1/16W R0402
MIO8
R111 20K ±1% 1/16W R0402
MIO4
R113 DNP 20K ±1% 1/16W R0402
QSPI0_IO2
R114 1K ±1% 1/16W R0402
R115 20K ±1% 1/16W R0402
QSPI0_IO3
R116 DNP 0R ±1% 1/16W R0402
R117 1K ±1% 1/16W R0402
MIO5
去掉电阻，MIO5为1；
保留电阻，MIO5为0
R112 4.7K ±1% 1/16W R0402
D2 LED LED0603
PS_POR_RST
PS_UART_RXD0 PS_UART_TXD0 P18 P18
R118 4.7K ±1% 1/16W R0402
R119 4.7K ±1% 1/16W R0402
P19 P19 SFP_SCL SFP_SDA
R120 22R ±1% 1/16W R0402
R121 22R ±1% 1/16W R0402
PS_IIC1_SCL PS_IIC1_SDA
R122 4.7K ±1% 1/16W R0402
R123 4.7K ±1% 1/16W R0402
PS_IIC0_SDA PS_IIC0_SCL
U12 SDA SCL ART GND V+ A0 A1 A2
SGM452TS8G/TR
注意该封装与器件匹配
C192 0.1uF ±10% 25V C0402
R125 5.1K ±1% 1/16W R0402
R126 5.1K ±1% 1/16W R0402
R127 5.1K ±1% 1/16W R0402
PS CLK
LM17 CBM100505U190T LM0402
R124 4.7K ±1% 1/16W R0402
C191 0.1uF ±10% 50V C0402
Y1 EN VCC GND OUT
50MHZ-3.3V
OP252050MEDA4SI-U
R128 22R ±1% 1/16W R0402
PS_CLK_50M
QSPI FLASH程序烧录
U13 DQ0 DQ1 W#/DQ2 DQ3#/HOLD# S# C VCC VSS EPAD
MT25QL256ABA1EW9-0SIT
QSPI0_IO0 QSPI0_IO1 QSPI0_IO2 QSPI0_IO3 QSPI0_CS QSPI0_CLK
R133 4.7K ±1% 1/16W R0402
C194 0.1uF ±10% 50V C0402
C193 0.1uF ±10% 50V C0402
R129 10K ±1% 1/16W R0402
R130 10K ±1% 1/16W R0402
P19 PS_JTAG_nSRST
P19 PL_JTAG_nSRST
U14 VCC A1 A2 GND Y1 Y2
NC7WZ07FHX
R131 0R ±1% 1/16W R0402
R132 0R ±1% 1/16W R0402
PS_SRST_B

	MIO8	MIO7
PS BANK	Bank1	Bank0
2.5V/3.3V	0	0
1.8V	1	1

	MIO5	MIO4
JTAG	0	0
NAND	0	1
Quad-SPI	1	0
SD Card	1	1

<Variant Name>

Title
7Z035_BANK500-501

Size C
Document Number LY-SGM-A001A
Rev A

Date: Saturday, May 25, 2024
Sheet 10 of 19

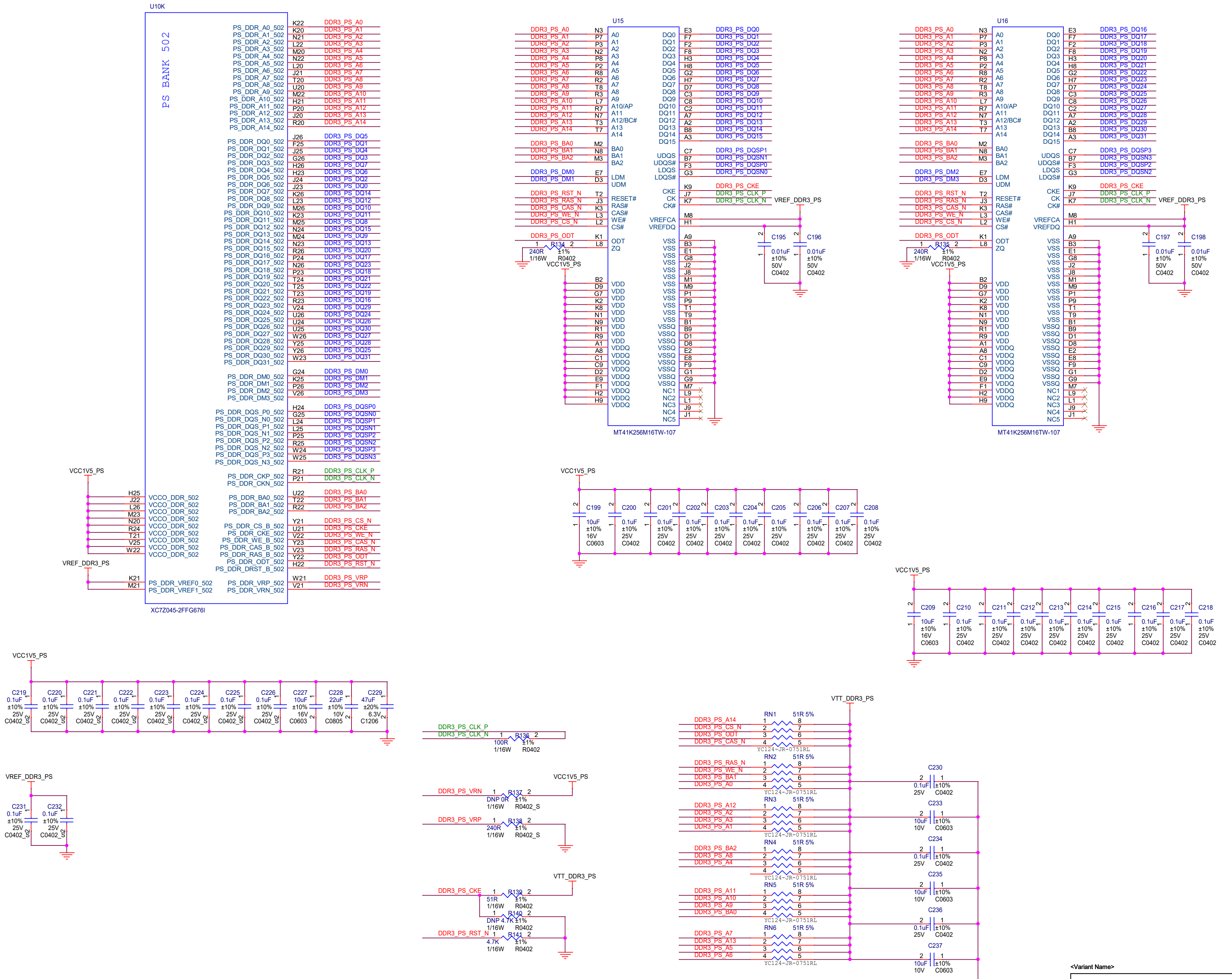
U10K
PS BANK 502
XC7Z045-2FFG676I
PS_DDR_A0_502 … PS_DDR_A14_502
PS_DDR_DQ0_502 … PS_DDR_DQ31_502
PS_DDR_DM0_502 … PS_DDR_DM3_502
PS_DDR_DQS_P0_502 … PS_DDR_DQS_N3_502
PS_DDR_CKP_502
PS_DDR_CKN_502
PS_DDR_BA0_502
PS_DDR_BA1_502
PS_DDR_BA2_502
PS_DDR_CS_B_502
PS_DDR_CKE_502
PS_DDR_WE_B_502
PS_DDR_CAS_B_502
PS_DDR_RAS_B_502
PS_DDR_ODT_502
PS_DDR_DRST_B_502
PS_DDR_VRP_502
PS_DDR_VRN_502
VCCO_DDR_502
PS_DDR_VREF0_502
PS_DDR_VREF1_502
VCC1V5_PS
VREF_DDR3_PS
VTT_DDR3_PS
DDR3_PS_A0 … DDR3_PS_A14
DDR3_PS_DQ0 … DDR3_PS_DQ31
DDR3_PS_DM0 … DDR3_PS_DM3
DDR3_PS_DQSP0 … DDR3_PS_DQSN3
DDR3_PS_CLK_P
DDR3_PS_CLK_N
DDR3_PS_BA0
DDR3_PS_BA1
DDR3_PS_BA2
DDR3_PS_CS_N
DDR3_PS_CKE
DDR3_PS_WE_N
DDR3_PS_CAS_N
DDR3_PS_RAS_N
DDR3_PS_ODT
DDR3_PS_RST_N
DDR3_PS_VRP
DDR3_PS_VRN
U15
U16
MT41K256M16TW-107
A0 … A14
A10/AP
A12/BC#
BA0 BA1 BA2
LDM UDM
RESET# RAS# CAS# WE# CS#
ODT ZQ
DQ0 … DQ15
UDQS UDQS# LDQS LDQS#
CKE CK CK#
VREFCA VREFDQ
VSS VSSQ VDD VDDQ
NC1 NC2 NC3 NC4 NC5
R134 240R ±1% 1/16W R0402
R135 240R ±1% 1/16W R0402
C195 C196 C197 C198 0.01uF ±10% 50V C0402
C199 10uF ±10% 16V C0603
C200–C208 0.1uF ±10% 25V C0402
C209 10uF ±10% 16V C0603
C210–C218 0.1uF ±10% 25V C0402
C219–C226 0.1uF ±10% 25V C0402
C227 10uF ±10% 16V C0603
C228 22uF ±10% 10V C0805
C229 47uF ±20% 6.3V C1206
C231 C232 0.1uF ±10% 25V C0402
R136 100R ±1% 1/16W R0402
R137 DNP 0R ±1% 1/16W R0402_S
R138 240R ±1% 1/16W R0402_S
R139 51R ±1% 1/16W R0402
R140 DNP 4.7K ±1% 1/16W R0402
R141 4.7K ±1% 1/16W R0402
RN1–RN6 51R 5% YC124-JR-0751RL
C230 C232 C234 C236 0.1uF ±10% 25V C0402
C233 C235 C237 10uF ±10% 10V C0603

<Variant Name>

Title
7Z035_PS_DDR3

Size C
Document Number LY-SGM-A001A
Rev A

Date: Saturday, May 25, 2024
Sheet 11 of 19

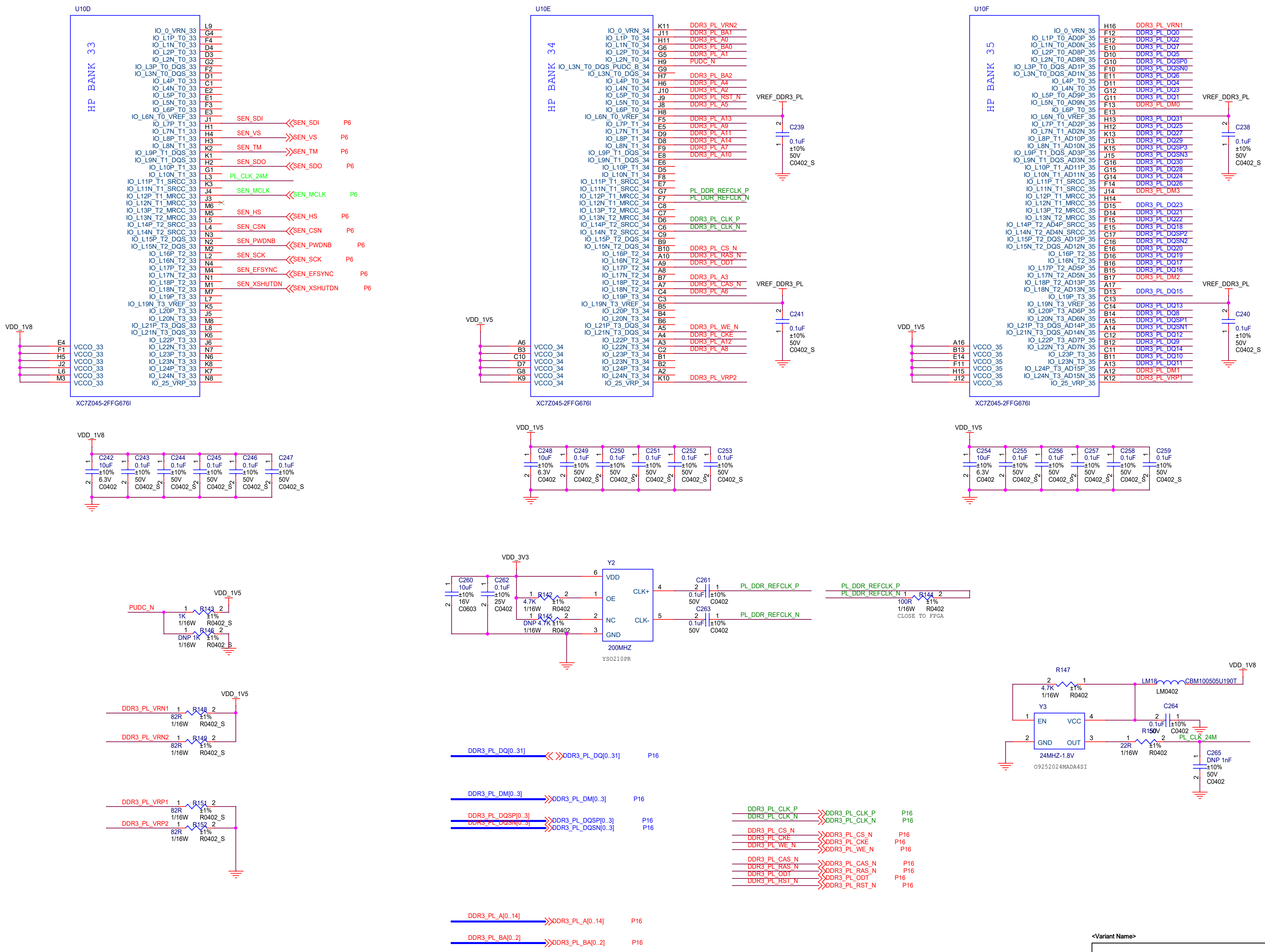
U10D
HP BANK 33
IO_0_VRN_33 L9
IO_L1P_T0_33 G4
IO_L1N_T0_33 F4
IO_L2P_T0_33 D4
IO_L2N_T0_33 D3
IO_L3P_T0_DQS_33 G2
IO_L3N_T0_DQS_33 F2
IO_L4P_T0_33 D1
IO_L4N_T0_33 C1
IO_L5P_T0_33 E2
IO_L5N_T0_33 E1
IO_L6P_T0_33 F3
IO_L6N_T0_VREF_33 E3
IO_L7P_T1_33 J1 SEN_SDI
IO_L7N_T1_33 H1
IO_L8P_T1_33 H4 SEN_VS
IO_L8N_T1_33 H3
IO_L9P_T1_DQS_33 K2 SEN_TM
IO_L9N_T1_DQS_33 K1
IO_L10P_T1_33 H2 SEN_SDO
IO_L10N_T1_33 G1
IO_L11P_T1_SRCC_33 L3 PL_CLK_24M
IO_L11N_T1_SRCC_33 K3
IO_L12P_T1_MRCC_33 J4 SEN_MCLK
IO_L12N_T1_MRCC_33 J3
IO_L13P_T2_MRCC_33 M6
IO_L13N_T2_MRCC_33 M5 SEN_HS
IO_L14P_T2_SRCC_33 L5
IO_L14N_T2_SRCC_33 L4 SEN_CSN
IO_L15P_T2_DQS_33 N3
IO_L15N_T2_DQS_33 N2 SEN_PWDNB
IO_L16P_T2_33 M2
IO_L16N_T2_33 L2 SEN_SCK
IO_L17P_T2_33 N4
IO_L17N_T2_33 M4 SEN_EFSYNC
IO_L18P_T2_33 N1
IO_L18N_T2_33 M1 SEN_XSHUTDN
IO_L19P_T3_33 M7
IO_L19N_T3_VREF_33 L7
IO_L20P_T3_33 K5
IO_L20N_T3_33 J5
IO_L21P_T3_DQS_33 M8
IO_L21N_T3_DQS_33 L8
IO_L22P_T3_33 K6
IO_L22N_T3_33 J6
IO_L23P_T3_33 N7
IO_L23N_T3_33 N6
IO_L24P_T3_33 K8
IO_L24N_T3_33 K7
IO_25_VRP_33 N8
VDD_1V8
E4 F1 H5 J2 L6 M3 VCCO_33
XC7Z045-2FFG676I
SEN_SDI P6
SEN_VS P6
SEN_TM P6
SEN_SDO P6
SEN_MCLK P6
SEN_HS P6
SEN_CSN P6
SEN_PWDNB P6
SEN_SCK P6
SEN_EFSYNC P6
SEN_XSHUTDN P6
U10E
HP BANK 34
IO_0_VRN_34 K11 DDR3_PL_VRN2
IO_L1P_T0_34 J11 DDR3_PL_BA1
IO_L1N_T0_34 H11 DDR3_PL_A0
IO_L2P_T0_34 G6 DDR3_PL_BA0
IO_L2N_T0_34 G5 DDR3_PL_A1
IO_L3P_T0_DQS_PUDC_B_34 H9 PUDC_N
IO_L3N_T0_DQS_34 G9
IO_L4P_T0_34 H7 DDR3_PL_BA2
IO_L4N_T0_34 H6 DDR3_PL_A4
IO_L5P_T0_34 J10 DDR3_PL_A2
IO_L5N_T0_34 J9 DDR3_PL_RST_N
IO_L6P_T0_34 J8 DDR3_PL_A5
IO_L6N_T0_VREF_34 H8
IO_L7P_T1_34 F5 DDR3_PL_A13
IO_L7N_T1_34 E5 DDR3_PL_A9
IO_L8P_T1_34 D9 DDR3_PL_A11
IO_L8N_T1_34 D8 DDR3_PL_A14
IO_L9P_T1_DQS_34 F9 DDR3_PL_A7
IO_L9N_T1_DQS_34 E8 DDR3_PL_A10
IO_L10P_T1_34 E6
IO_L10N_T1_34 D5
IO_L11P_T1_SRCC_34 F8
IO_L11N_T1_SRCC_34 E7
IO_L12P_T1_MRCC_34 G7 PL_DDR_REFCLK_P
IO_L12N_T1_MRCC_34 F7 PL_DDR_REFCLK_N
IO_L13P_T2_MRCC_34 C8
IO_L13N_T2_MRCC_34 C7
IO_L14P_T2_SRCC_34 D6 DDR3_PL_CLK_P
IO_L14N_T2_SRCC_34 C6 DDR3_PL_CLK_N
IO_L15P_T2_DQS_34 C9
IO_L15N_T2_DQS_34 B9
IO_L16P_T2_34 B10 DDR3_PL_CS_N
IO_L16N_T2_34 A10 DDR3_PL_RAS_N
IO_L17P_T2_34 A9 DDR3_PL_ODT
IO_L17N_T2_34 A8
IO_L18P_T2_34 B7 DDR3_PL_A3
IO_L18N_T2_34 A7 DDR3_PL_CAS_N
IO_L19P_T3_34 C4 DDR3_PL_A6
IO_L19N_T3_VREF_34 C3
IO_L20P_T3_34 B5
IO_L20N_T3_34 B4
IO_L21P_T3_DQS_34 B6
IO_L21N_T3_DQS_34 A5 DDR3_PL_WE_N
IO_L22P_T3_34 A4 DDR3_PL_CKE
IO_L22N_T3_34 A3 DDR3_PL_A12
IO_L23P_T3_34 C2 DDR3_PL_A8
IO_L23N_T3_34 B1
IO_L24P_T3_34 B2
IO_L24N_T3_34 A2
IO_25_VRP_34 K10 DDR3_PL_VRP2
VDD_1V5
A6 B3 C10 D7 G8 K9 VCCO_34
XC7Z045-2FFG676I
VREF_DDR3_PL
C239 0.1uF ±10% 50V C0402_S
VREF_DDR3_PL
C241 0.1uF ±10% 50V C0402_S
U10F
HP BANK 35
IO_0_VRN_35 H16 DDR3_PL_VRN1
IO_L1P_T0_AD0P_35 F12 DDR3_PL_DQ0
IO_L1N_T0_AD0N_35 E12 DDR3_PL_DQ2
IO_L2P_T0_AD8P_35 E10 DDR3_PL_DQ7
IO_L2N_T0_AD8N_35 D10 DDR3_PL_DQ5
IO_L3P_T0_DQS_AD1P_35 G10 DDR3_PL_DQSP0
IO_L3N_T0_DQS_AD1N_35 F10 DDR3_PL_DQSN0
IO_L4P_T0_35 E11 DDR3_PL_DQ6
IO_L4N_T0_35 D11 DDR3_PL_DQ4
IO_L5P_T0_AD9P_35 G12 DDR3_PL_DQ3
IO_L5N_T0_AD9N_35 G11 DDR3_PL_DQ1
IO_L6P_T0_35 F13 DDR3_PL_DM0
IO_L6N_T0_VREF_35 E13
IO_L7P_T1_AD2P_35 H13 DDR3_PL_DQ31
IO_L7N_T1_AD2N_35 H12 DDR3_PL_DQ25
IO_L8P_T1_AD10P_35 K13 DDR3_PL_DQ27
IO_L8N_T1_AD10N_35 J13 DDR3_PL_DQ29
IO_L9P_T1_DQS_AD3P_35 K15 DDR3_PL_DQSP3
IO_L9N_T1_DQS_AD3N_35 J15 DDR3_PL_DQSN3
IO_L10P_T1_AD11P_35 G16 DDR3_PL_DQ30
IO_L10N_T1_AD11N_35 G15 DDR3_PL_DQ28
IO_L11P_T1_SRCC_35 G14 DDR3_PL_DQ24
IO_L11N_T1_SRCC_35 F14 DDR3_PL_DQ26
IO_L12P_T1_MRCC_35 J14 DDR3_PL_DM3
IO_L12N_T1_MRCC_35 H14
IO_L13P_T2_MRCC_35 D15 DDR3_PL_DQ23
IO_L13N_T2_MRCC_35 D14 DDR3_PL_DQ21
IO_L14P_T2_AD4P_SRCC_35 F15 DDR3_PL_DQ22
IO_L14N_T2_AD4N_SRCC_35 E15 DDR3_PL_DQ18
IO_L15P_T2_DQS_AD12P_35 C17 DDR3_PL_DQSP2
IO_L15N_T2_DQS_AD12N_35 C16 DDR3_PL_DQSN2
IO_L16P_T2_35 E16 DDR3_PL_DQ20
IO_L16N_T2_35 D16 DDR3_PL_DQ19
IO_L17P_T2_AD5P_35 B16 DDR3_PL_DQ17
IO_L17N_T2_AD5N_35 B15 DDR3_PL_DQ16
IO_L18P_T2_AD13P_35 B17 DDR3_PL_DM2
IO_L18N_T2_AD13N_35 A17
IO_L19P_T3_35 D13 DDR3_PL_DQ15
IO_L19N_T3_VREF_35 C13
IO_L20P_T3_AD6P_35 C14 DDR3_PL_DQ13
IO_L20N_T3_AD6N_35 B14 DDR3_PL_DQ8
IO_L21P_T3_DQS_AD14P_35 A15 DDR3_PL_DQSP1
IO_L21N_T3_DQS_AD14N_35 A14 DDR3_PL_DQSN1
IO_L22P_T3_AD7P_35 C12 DDR3_PL_DQ12
IO_L22N_T3_AD7N_35 B12 DDR3_PL_DQ9
IO_L23P_T3_35 C11 DDR3_PL_DQ14
IO_L23N_T3_35 B11 DDR3_PL_DQ10
IO_L24P_T3_AD15P_35 A13 DDR3_PL_DQ11
IO_L24N_T3_AD15N_35 A12 DDR3_PL_DM1
IO_25_VRP_35 K12 DDR3_PL_VRP1
VDD_1V5
A16 B13 E14 F11 H15 J12 VCCO_35
XC7Z045-2FFG676I
VREF_DDR3_PL
C238 0.1uF ±10% 50V C0402_S
VREF_DDR3_PL
C240 0.1uF ±10% 50V C0402_S
VDD_1V8
C242 10uF ±10% 6.3V C0402
C243 0.1uF ±10% 50V C0402_S
C244 0.1uF ±10% 50V C0402_S
C245 0.1uF ±10% 50V C0402_S
C246 0.1uF ±10% 50V C0402_S
C247 0.1uF ±10% 50V C0402_S
VDD_1V5
C248 10uF ±10% 6.3V C0402
C249 0.1uF ±10% 50V C0402_S
C250 0.1uF ±10% 50V C0402_S
C251 0.1uF ±10% 50V C0402_S
C252 0.1uF ±10% 50V C0402_S
C253 0.1uF ±10% 50V C0402_S
VDD_1V5
C254 10uF ±10% 6.3V C0402
C255 0.1uF ±10% 50V C0402_S
C256 0.1uF ±10% 50V C0402_S
C257 0.1uF ±10% 50V C0402_S
C258 0.1uF ±10% 50V C0402_S
C259 0.1uF ±10% 50V C0402_S
VDD_1V5
PUDC_N
R143 1K ±1% 1/16W R0402_S
R146 DNP 1K ±1% 1/16W R0402_S
VDD_3V3
C260 10uF ±10% 16V C0603
C262 0.1uF ±10% 25V C0402
R142 4.7K ±1% 1/16W R0402
R145 DNP 4.7K ±1% 1/16W R0402
Y2
VDD OE NC GND CLK+ CLK-
200MHZ
YSO210PR
C261 0.1uF ±10% 50V C0402
C263 0.1uF ±10% 50V C0402
PL_DDR_REFCLK_P
PL_DDR_REFCLK_N
PL_DDR_REFCLK_P
PL_DDR_REFCLK_N
R144 100R ±1% 1/16W R0402
CLOSE TO FPGA
VDD_1V5
DDR3_PL_VRN1 R148 82R ±1% 1/16W R0402_S
DDR3_PL_VRN2 R149 82R ±1% 1/16W R0402_S
DDR3_PL_VRP1 R151 82R ±1% 1/16W R0402_S
DDR3_PL_VRP2 R152 82R ±1% 1/16W R0402_S
DDR3_PL_DQ[0..31] DDR3_PL_DQ[0..31] P16
DDR3_PL_DM[0..3] DDR3_PL_DM[0..3] P16
DDR3_PL_DQSP[0..3] DDR3_PL_DQSP[0..3] P16
DDR3_PL_DQSN[0..3] DDR3_PL_DQSN[0..3] P16
DDR3_PL_A[0..14] DDR3_PL_A[0..14] P16
DDR3_PL_BA[0..2] DDR3_PL_BA[0..2] P16
DDR3_PL_CLK_P DDR3_PL_CLK_P P16
DDR3_PL_CLK_N DDR3_PL_CLK_N P16
DDR3_PL_CS_N DDR3_PL_CS_N P16
DDR3_PL_CKE DDR3_PL_CKE P16
DDR3_PL_WE_N DDR3_PL_WE_N P16
DDR3_PL_CAS_N DDR3_PL_CAS_N P16
DDR3_PL_RAS_N DDR3_PL_RAS_N P16
DDR3_PL_ODT DDR3_PL_ODT P16
DDR3_PL_RST_N DDR3_PL_RST_N P16
VDD_1V8
R147 4.7K ±1% 1/16W R0402
LM18 CBM100505U190T LM0402
Y3
EN VCC GND OUT
24MHZ-1.8V
O9252024MADA4SI
C264 0.1uF ±10% 50V C0402
R150 22R ±1% 1/16W R0402
PL_CLK_24M
C265 DNP 1nF ±10% 50V C0402

<Variant Name>

Title	7Z035_HP BANK	
Size C	Document Number LY-SGM-A001A	Rev A
Date: Saturday, May 25, 2024	Sheet 12 of 19	

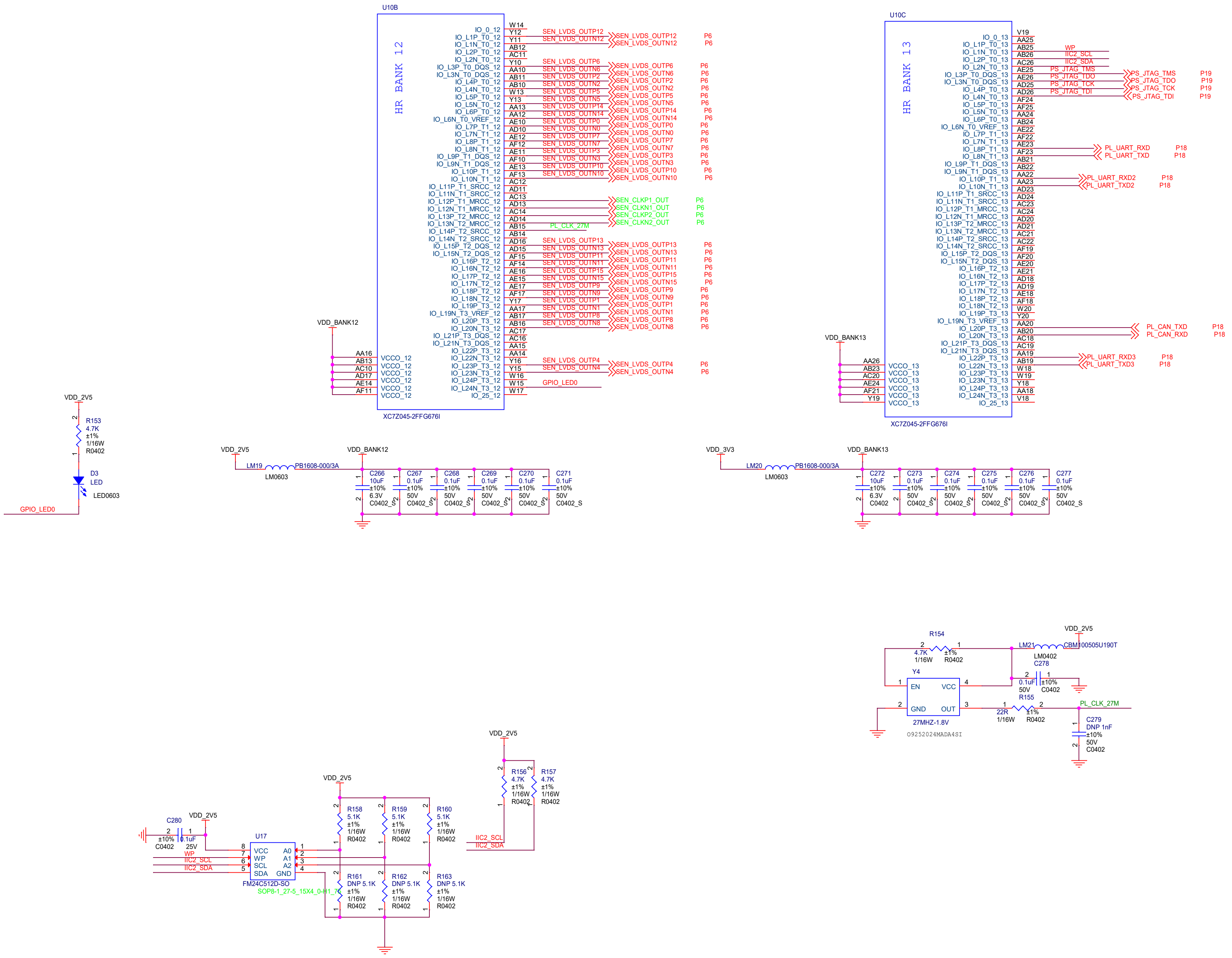
U10B
HR BANK 12
XC7Z045-2FFG676I
IO_0_12
IO_L1P_T0_12
IO_L1N_T0_12
IO_L6N_T0_VREF_12
IO_L11P_T1_SRCC_12
IO_L12P_T1_MRCC_12
IO_L19N_T3_VREF_12
IO_25_12
VCCO_12
VDD_BANK12
SEN_LVDS_OUTP12
SEN_LVDS_OUTN12
SEN_LVDS_OUTP6
SEN_LVDS_OUTN6
SEN_CLKP1_OUT
SEN_CLKN1_OUT
SEN_CLKP2_OUT
SEN_CLKN2_OUT
PL_CLK_27M
SEN_LVDS_OUTP4
SEN_LVDS_OUTN4
GPIO_LED0
P6
U10C
HR BANK 13
XC7Z045-2FFG676I
VCCO_13
VDD_BANK13
WP
IIC2_SCL
IIC2_SDA
PS_JTAG_TMS
PS_JTAG_TDO
PS_JTAG_TCK
PS_JTAG_TDI
P19
PL_UART_RXD
PL_UART_TXD
PL_UART_RXD2
PL_UART_TXD2
PL_CAN_TXD
PL_CAN_RXD
PL_UART_RXD3
PL_UART_TXD3
P18
VDD_2V5
R153
4.7K
±1%
1/16W
R0402
D3
LED
LED0603
GPIO_LED0
LM19
PB1608-000/3A
LM0603
C266
10uF
6.3V
C267
C268
C269
C270
C271
0.1uF
±10%
50V
C0402_S
VDD_3V3
LM20
C272
C273
C274
C275
C276
C277
C0402
R154
4.7K
LM21
CBM100505U190T
LM0402
C278
Y4
EN
VCC
GND
OUT
27MHZ-1.8V
O9252024MADA4SI
R155
22R
C279
DNP 1nF
U17
VCC
WP
SCL
SDA
A0
A1
A2
GND
FM24C512D-SO
SOP8-1_27-5_15X4_0-H1_7
C280
0.1uF
25V
R156
R157
R158
R159
R160
5.1K
R161
R162
R163
DNP 5.1K

<Variant Name>

Title
7Z035_HR BANK

Size C
Document Number LY-SGM-A001A
Rev A

Date: Saturday, May 25, 2024
Sheet 13 of 19

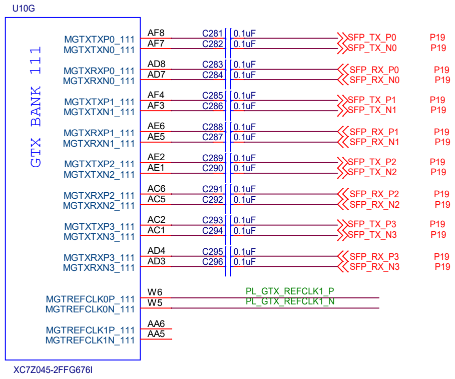
U10G
GTX BANK 111
MGTXTXP0_111
MGTXTXN0_111
MGTXRXP0_111
MGTXRXN0_111
MGTXTXP1_111
MGTXTXN1_111
MGTXRXP1_111
MGTXRXN1_111
MGTXTXP2_111
MGTXTXN2_111
MGTXRXP2_111
MGTXRXN2_111
MGTXTXP3_111
MGTXTXN3_111
MGTXRXP3_111
MGTXRXN3_111
MGTREFCLK0P_111
MGTREFCLK0N_111
MGTREFCLK1P_111
MGTREFCLK1N_111
AF8
AF7
AD8
AD7
AF4
AF3
AE6
AE5
AE2
AE1
AC6
AC5
AC2
AC1
AD4
AD3
W6
W5
AA6
AA5
C281 0.1uF
C282 0.1uF
C283 0.1uF
C284 0.1uF
C285 0.1uF
C286 0.1uF
C287 0.1uF
C288 0.1uF
C289 0.1uF
C290 0.1uF
C291 0.1uF
C292 0.1uF
C293 0.1uF
C294 0.1uF
C295 0.1uF
C296 0.1uF
SFP_TX_P0 P19
SFP_TX_N0 P19
SFP_RX_P0 P19
SFP_RX_N0 P19
SFP_TX_P1 P19
SFP_TX_N1 P19
SFP_RX_P1 P19
SFP_RX_N1 P19
SFP_TX_P2 P19
SFP_TX_N2 P19
SFP_RX_P2 P19
SFP_RX_N2 P19
SFP_TX_P3 P19
SFP_TX_N3 P19
SFP_RX_P3 P19
SFP_RX_N3 P19
PL_GTX_REFCLK1_P
PL_GTX_REFCLK1_N
XC7Z045-2FFG676I

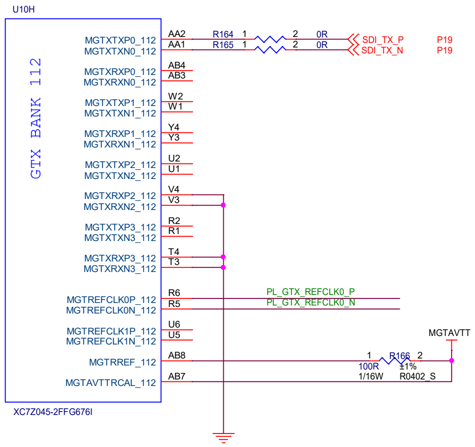
U10H
GTX BANK 112
MGTXTXP0_112
MGTXTXN0_112
MGTXRXP0_112
MGTXRXN0_112
MGTXTXP1_112
MGTXTXN1_112
MGTXRXP1_112
MGTXRXN1_112
MGTXTXP2_112
MGTXTXN2_112
MGTXRXP2_112
MGTXRXN2_112
MGTXTXP3_112
MGTXTXN3_112
MGTXRXP3_112
MGTXRXN3_112
MGTREFCLK0P_112
MGTREFCLK0N_112
MGTREFCLK1P_112
MGTREFCLK1N_112
MGTRREF_112
MGTAVTTRCAL_112
AA2
AA1
AB4
AB3
W2
W1
Y4
Y3
U2
U1
V4
V3
R2
R1
T4
T3
R6
R5
U6
U5
AB8
AB7
R164 1 2 0R
R165 1 2 0R
SDI_TX_P P19
SDI_TX_N P19
PL_GTX_REFCLK0_P
PL_GTX_REFCLK0_N
MGTAVTT
1 R166 2
100R ±1%
1/16W R0402_S
XC7Z045-2FFG676I

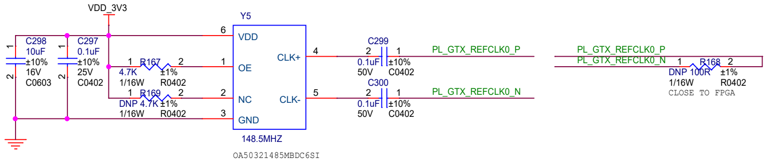
VDD_3V3
Y5
C298 10uF ±10% 16V C0603
C297 0.1uF ±10% 25V C0402
1
2
1 R167 2
4.7K ±1%
1/16W R0402
1 R169 2
DNP 4.7K ±1%
1/16W R0402
6 VDD
1 OE
2 NC
3 GND
4 CLK+
5 CLK-
148.5MHZ
OA50321485MBDC6SI
C299
2 1
0.1uF ±10%
50V C0402
C300
2 1
0.1uF ±10%
50V C0402
PL_GTX_REFCLK0_P
PL_GTX_REFCLK0_N
PL_GTX_REFCLK0_P
PL_GTX_REFCLK0_N
1 R168 2
DNP 100R ±1%
1/16W R0402
CLOSE TO FPGA

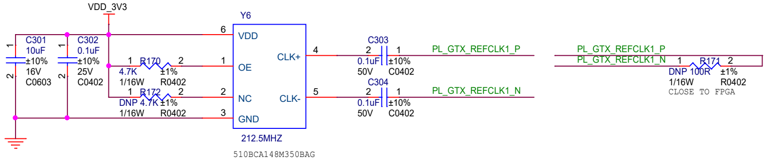
VDD_3V3
Y6
C301 10uF ±10% 16V C0603
C302 0.1uF ±10% 25V C0402
1
2
1 R170 2
4.7K ±1%
1/16W R0402
1 R172 2
DNP 4.7K ±1%
1/16W R0402
6 VDD
1 OE
2 NC
3 GND
4 CLK+
5 CLK-
212.5MHZ
510BCA148M350BAG
C303
2 1
0.1uF ±10%
50V C0402
C304
2 1
0.1uF ±10%
50V C0402
PL_GTX_REFCLK1_P
PL_GTX_REFCLK1_N
PL_GTX_REFCLK1_P
PL_GTX_REFCLK1_N
1 R171 2
DNP 100R ±1%
1/16W R0402
CLOSE TO FPGA

<Variant Name>

Title	7Z035_GTX BANK	
Size C	Document Number LY-SGM-A001A	Rev A
Date:	Saturday, May 25, 2024	Sheet 14 of 19

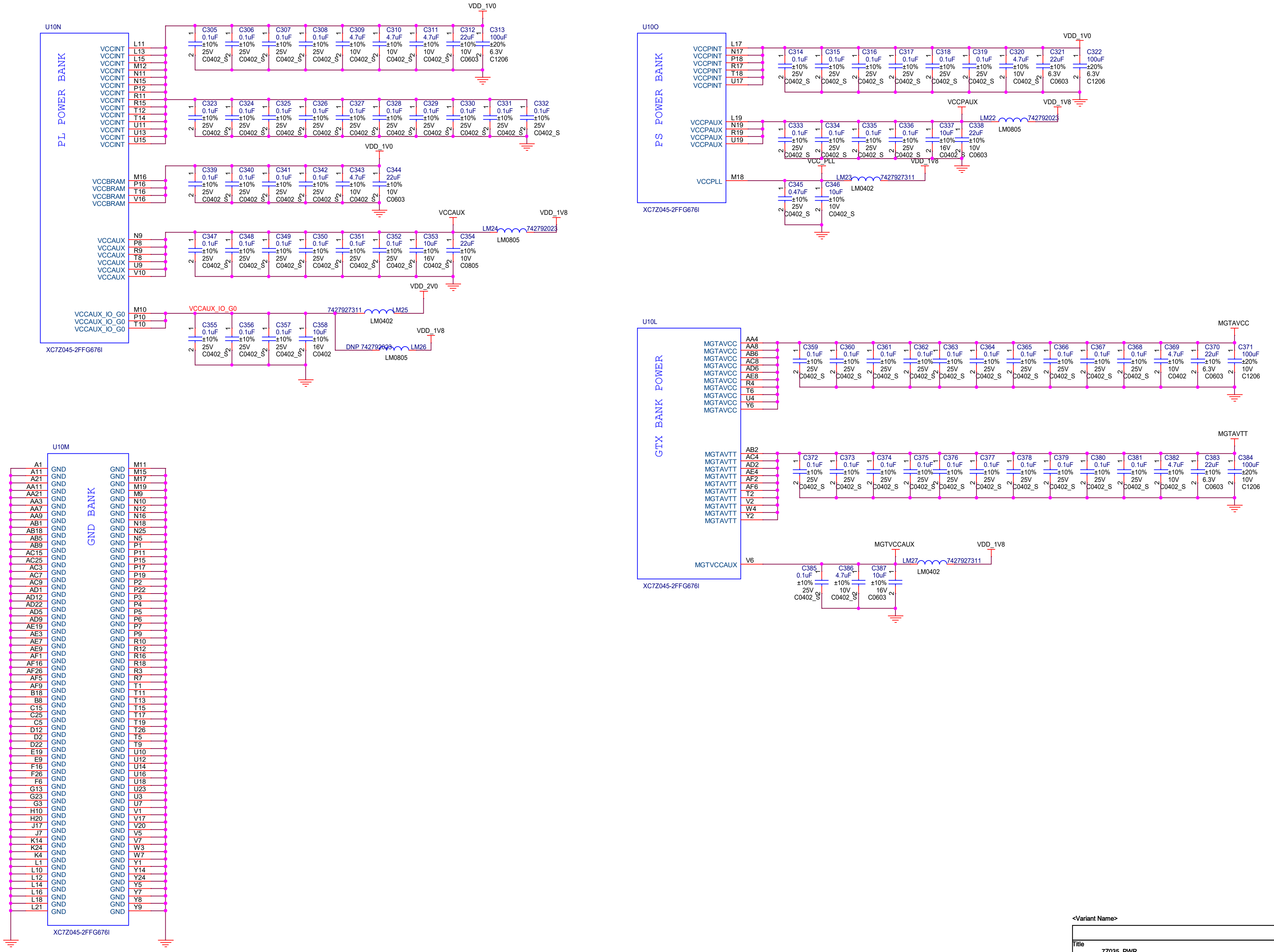
U10N
PL POWER BANK
VCCINT
L11
L13
L15
M12
N11
N15
P12
R11
R15
T12
T14
U11
U13
U15
VDD_1V0
C305 0.1uF ±10% 25V C0402_S
C306 0.1uF ±10% 25V C0402_S
C307 0.1uF ±10% 25V C0402_S
C308 0.1uF ±10% 25V C0402_S
C309 4.7uF ±10% 10V C0402_S
C310 4.7uF ±10% 10V C0402_S
C311 4.7uF ±10% 10V C0402_S
C312 22uF ±10% 6.3V C0603
C313 100uF ±20% 6.3V C1206
C323 0.1uF ±10% 25V C0402_S
C324 0.1uF ±10% 25V C0402_S
C325 0.1uF ±10% 25V C0402_S
C326 0.1uF ±10% 25V C0402_S
C327 0.1uF ±10% 25V C0402_S
C328 0.1uF ±10% 25V C0402_S
C329 0.1uF ±10% 25V C0402_S
C330 0.1uF ±10% 25V C0402_S
C331 0.1uF ±10% 25V C0402_S
C332 0.1uF ±10% 25V C0402_S
VDD_1V8
VCCBRAM
M16
P16
T16
V16
C339 0.1uF ±10% 25V C0402_S
C340 0.1uF ±10% 25V C0402_S
C341 0.1uF ±10% 25V C0402_S
C342 0.1uF ±10% 25V C0402_S
C343 4.7uF ±10% 10V C0402_S
C344 22uF ±10% 10V C0603
VCCAUX
N9
P8
R9
T8
U9
V10
VCCAUX
VDD_1V8
LM24 742792023 LM0805
C347 0.1uF ±10% 25V C0402_S
C348 0.1uF ±10% 25V C0402_S
C349 0.1uF ±10% 25V C0402_S
C350 0.1uF ±10% 25V C0402_S
C351 0.1uF ±10% 25V C0402_S
C352 0.1uF ±10% 25V C0402_S
C353 10uF ±10% 16V C0402_S
C354 22uF ±10% 10V C0805
VCCAUX_IO_G0
M10
P10
T10
VCCAUX_IO_G0
VDD_2V0
7427927311 LM25 LM0402
C355 0.1uF ±10% 25V C0402_S
C356 0.1uF ±10% 25V C0402_S
C357 0.1uF ±10% 25V C0402_S
C358 10uF ±10% 16V C0402
VDD_1V8
DNP 742792023 LM26 LM0805
XC7Z045-2FFG676I
U10O
PS POWER BANK
VCCPINT
L17
N17
P18
R17
T18
U17
VDD_1V0
C314 0.1uF ±10% 25V C0402_S
C315 0.1uF ±10% 25V C0402_S
C316 0.1uF ±10% 25V C0402_S
C317 0.1uF ±10% 25V C0402_S
C318 0.1uF ±10% 25V C0402_S
C319 0.1uF ±10% 25V C0402_S
C320 4.7uF 10V C0402_S
C321 22uF ±10% 6.3V C0603
C322 100uF ±20% 6.3V C1206
VCCPAUX
L19
N19
R19
U19
VCCPAUX
VDD_1V8
LM22 742792023 LM0805
C333 0.1uF ±10% 25V C0402_S
C334 0.1uF ±10% 25V C0402_S
C335 0.1uF ±10% 25V C0402_S
C336 0.1uF ±10% 25V C0402_S
C337 10uF ±10% 16V C0402_S
C338 22uF ±10% 10V C0603
VCC_PLL
VDD_1V8
VCCPLL
M18
LM23 7427927311 LM0402
C345 0.47uF ±10% 25V C0402_S
C346 10uF ±10% 10V C0402_S
XC7Z045-2FFG676I
U10L
GTX BANK POWER
MGTAVCC
AA4
AA8
AB6
AC8
AD6
AE8
R4
T6
U4
Y6
MGTAVCC
C359 0.1uF ±10% 25V C0402_S
C360 0.1uF ±10% 25V C0402_S
C361 0.1uF ±10% 25V C0402_S
C362 0.1uF ±10% 25V C0402_S
C363 0.1uF ±10% 25V C0402_S
C364 0.1uF ±10% 25V C0402_S
C365 0.1uF ±10% 25V C0402_S
C366 0.1uF ±10% 25V C0402_S
C367 0.1uF ±10% 25V C0402_S
C368 0.1uF ±10% 25V C0402_S
C369 4.7uF ±10% 10V C0402
C370 22uF ±10% 6.3V C0603
C371 100uF ±20% 10V C1206
MGTAVTT
AB2
AC4
AD2
AE4
AF2
AF6
T2
V2
W4
Y2
MGTAVTT
C372 0.1uF ±10% 25V C0402_S
C373 0.1uF ±10% 25V C0402_S
C374 0.1uF ±10% 25V C0402_S
C375 0.1uF ±10% 25V C0402_S
C376 0.1uF ±10% 25V C0402_S
C377 0.1uF ±10% 25V C0402_S
C378 0.1uF ±10% 25V C0402_S
C379 0.1uF ±10% 25V C0402_S
C380 0.1uF ±10% 25V C0402_S
C381 0.1uF ±10% 25V C0402_S
C382 4.7uF ±10% 10V C0402_S
C383 22uF ±10% 6.3V C0603
C384 100uF ±20% 10V C1206
MGTVCCAUX
V6
MGTVCCAUX
VDD_1V8
LM27 7427927311 LM0402
C385 0.1uF ±10% 25V C0402_S
C386 4.7uF ±10% 10V C0402_S
C387 10uF ±10% 16V C0603
XC7Z045-2FFG676I
U10M
GND BANK
GND
A1
A11
A21
AA11
AA21
AA3
AA7
AA9
AB1
AB18
AB5
AB9
AC15
AC25
AC3
AC7
AC9
AD1
AD12
AD22
AD5
AD9
AE19
AE3
AE7
AE9
AF1
AF16
AF26
AF5
AF9
B18
B8
C15
C25
C5
D12
D2
D22
E19
E9
F16
F26
F6
G13
G23
G3
H10
H20
J17
J7
K14
K24
K4
L1
L10
L12
L14
L16
L18
L21
M11
M15
M17
M19
M9
N10
N12
N16
N18
N25
N5
P1
P11
P15
P17
P19
P2
P22
P3
P4
P5
P6
P7
P9
R10
R12
R16
R18
R3
R7
T1
T11
T13
T15
T17
T19
T26
T5
T9
U10
U12
U14
U16
U18
U23
U3
U7
V1
V17
V20
V5
V7
W3
W7
Y1
Y14
Y24
Y5
Y7
Y8
Y9
XC7Z045-2FFG676I

<Variant Name>

Title	7Z035_PWR		
Size C	Document Number LY-SGM-A001A		Rev A
Date:	Saturday, May 25, 2024	Sheet 15 of 19	

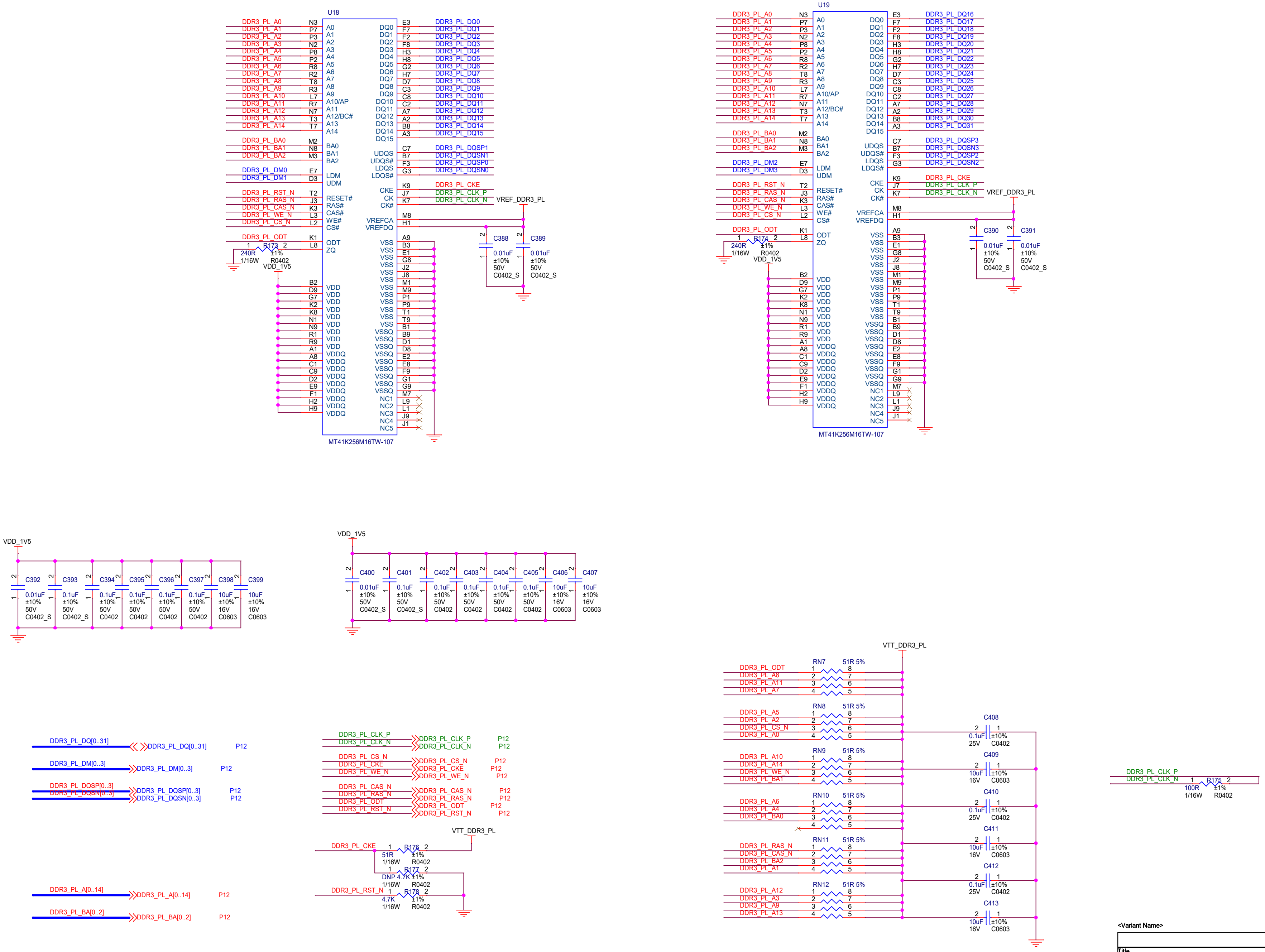
U18
MT41K256M16TW-107
DDR3_PL_A0 … DDR3_PL_A14
A0 A1 A2 A3 A4 A5 A6 A7 A8 A9 A10/AP A11 A12/BC# A13 A14
DDR3_PL_BA0 DDR3_PL_BA1 DDR3_PL_BA2
BA0 BA1 BA2
DDR3_PL_DM0 DDR3_PL_DM1
LDM UDM
DDR3_PL_RST_N DDR3_PL_RAS_N DDR3_PL_CAS_N DDR3_PL_WE_N DDR3_PL_CS_N
RESET# RAS# CAS# WE# CS#
DDR3_PL_ODT
ODT ZQ
R173 240R ±1% 1/16W R0402
VDD_1V5
VDD VDDQ
DQ0 … DQ15
DDR3_PL_DQ0 … DDR3_PL_DQ15
UDQS UDQS# LDQS LDQS#
DDR3_PL_DQSP1 DDR3_PL_DQSN1 DDR3_PL_DQSP0 DDR3_PL_DQSN0
CKE CK CK#
DDR3_PL_CKE DDR3_PL_CLK_P DDR3_PL_CLK_N
VREF_DDR3_PL
VREFCA VREFDQ
VSS VSSQ NC1 NC2 NC3 NC4 NC5
C388 C389 0.01uF ±10% 50V C0402_S
U19
MT41K256M16TW-107
DDR3_PL_DM2 DDR3_PL_DM3
DDR3_PL_DQ16 … DDR3_PL_DQ31
DDR3_PL_DQSP3 DDR3_PL_DQSN3 DDR3_PL_DQSP2 DDR3_PL_DQSN2
R174 240R ±1% 1/16W R0402
C390 C391 0.01uF ±10% 50V C0402_S
VDD_1V5
C392 0.01uF ±10% 50V C0402_S
C393 0.1uF ±10% 50V C0402_S
C394 C395 C396 C397 0.1uF ±10% 50V C0402
C398 C399 10uF ±10% 16V C0603
VDD_1V5
C400 0.01uF ±10% 50V C0402_S
C401 0.1uF ±10% 50V C0402_S
C402 C403 C404 C405 0.1uF ±10% 50V C0402
C406 C407 10uF ±10% 16V C0603
DDR3_PL_DQ[0..31] P12
DDR3_PL_DM[0..3] P12
DDR3_PL_DQSP[0..3] P12
DDR3_PL_DQSN[0..3] P12
DDR3_PL_A[0..14] P12
DDR3_PL_BA[0..2] P12
DDR3_PL_CLK_P P12
DDR3_PL_CLK_N P12
DDR3_PL_CS_N P12
DDR3_PL_CKE P12
DDR3_PL_WE_N P12
DDR3_PL_CAS_N P12
DDR3_PL_RAS_N P12
DDR3_PL_ODT P12
DDR3_PL_RST_N P12
VTT_DDR3_PL
R176 51R ±1% 1/16W R0402
R177 DNP 4.7K ±1% 1/16W R0402
R178 4.7K ±1% 1/16W R0402
VTT_DDR3_PL
RN7 51R 5% DDR3_PL_ODT DDR3_PL_A8 DDR3_PL_A11 DDR3_PL_A7
RN8 51R 5% DDR3_PL_A5 DDR3_PL_A2 DDR3_PL_CS_N DDR3_PL_A0
RN9 51R 5% DDR3_PL_A10 DDR3_PL_A14 DDR3_PL_WE_N DDR3_PL_BA1
RN10 51R 5% DDR3_PL_A6 DDR3_PL_A4 DDR3_PL_BA0
RN11 51R 5% DDR3_PL_RAS_N DDR3_PL_CAS_N DDR3_PL_BA2 DDR3_PL_A1
RN12 51R 5% DDR3_PL_A12 DDR3_PL_A3 DDR3_PL_A9 DDR3_PL_A13
C408 C410 C412 0.1uF ±10% 25V C0402
C409 C411 C413 10uF ±10% 16V C0603
DDR3_PL_CLK_P DDR3_PL_CLK_N
R175 100R ±1% 1/16W R0402

<Variant Name>

Title
BLOCK DIAGRAM

Size	Document Number	Rev
C	LY-SGM-A001A	A

Date: Saturday, May 25, 2024 Sheet 16 of 19

电源防反接电路

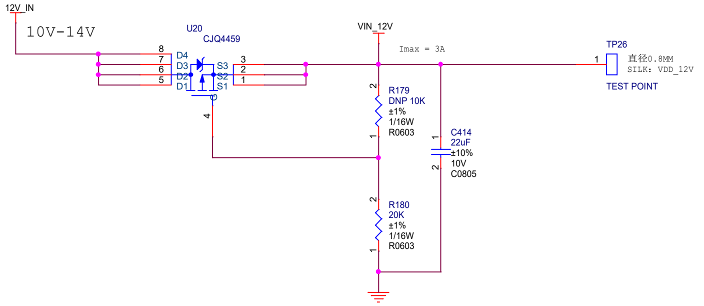
12V_IN
10V-14V
U20
CJQ4459
8
7
6
5
D4
D3
D2
D1
S3
S2
S1
3
2
1
4
VIN_12V
Imax = 3A
TP26
1
直径0.8MM
SILK: VDD_12V
TEST POINT
R179
DNP 10K
±1%
1/16W
R0603
C414
22uF
±10%
10V
C0805
R180
20K
±1%
1/16W
R0603

电源防过压电路

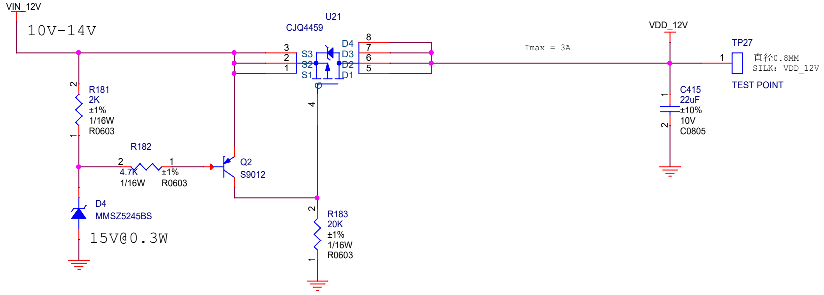
VIN_12V
10V-14V
U21
CJQ4459
3
2
1
S3
S2
S1
D4
D3
D2
D1
8
7
6
5
4
R181
2K
±1%
1/16W
R0603
R182
4.7K
±1%
1/16W
R0603
Q2
S9012
D4
MMSZ5245BS
15V@0.3W
R183
20K
±1%
1/16W
R0603
Imax = 3A
VDD_12V
TP27
1
直径0.8MM
SILK: VDD_12V
TEST POINT
C415
22uF
±10%
10V
C0805

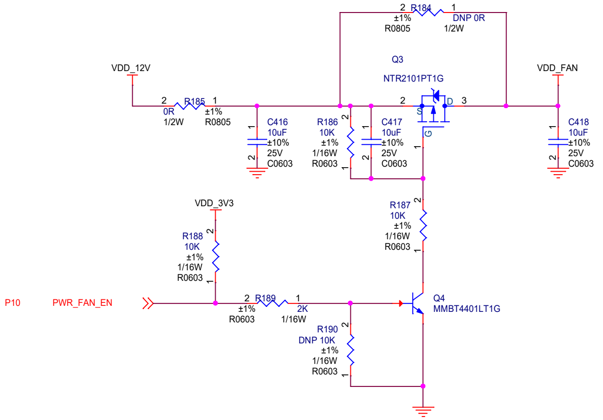
R184
±1%
R0805
DNP 0R
1/2W
Q3
NTR2101PT1G
VDD_12V
R185
0R
1/2W
±1%
R0805
C416
10uF
±10%
25V
C0603
R186
10K
±1%
1/16W
R0603
C417
10uF
±10%
25V
C0603
VDD_FAN
C418
10uF
±10%
25V
C0603
R187
10K
±1%
1/16W
R0603
VDD_3V3
R188
10K
±1%
1/16W
R0603
P10
PWR_FAN_EN
R189
±1%
R0603
2K
1/16W
Q4
MMBT4401LT1G
R190
DNP 10K
±1%
1/16W
R0603

图像数据接口

风扇接口

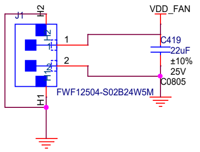
J1
H2
H1
1
2
FWF12504-S02B24W5M
VDD_FAN
C419
22uF
±10%
25V
C0805

<Variant Name>

Title	VER A	
Size C	Document Number LY-SGM-A001A	Rev A
Date:	Saturday, May 25, 2024	Sheet 17 of 19

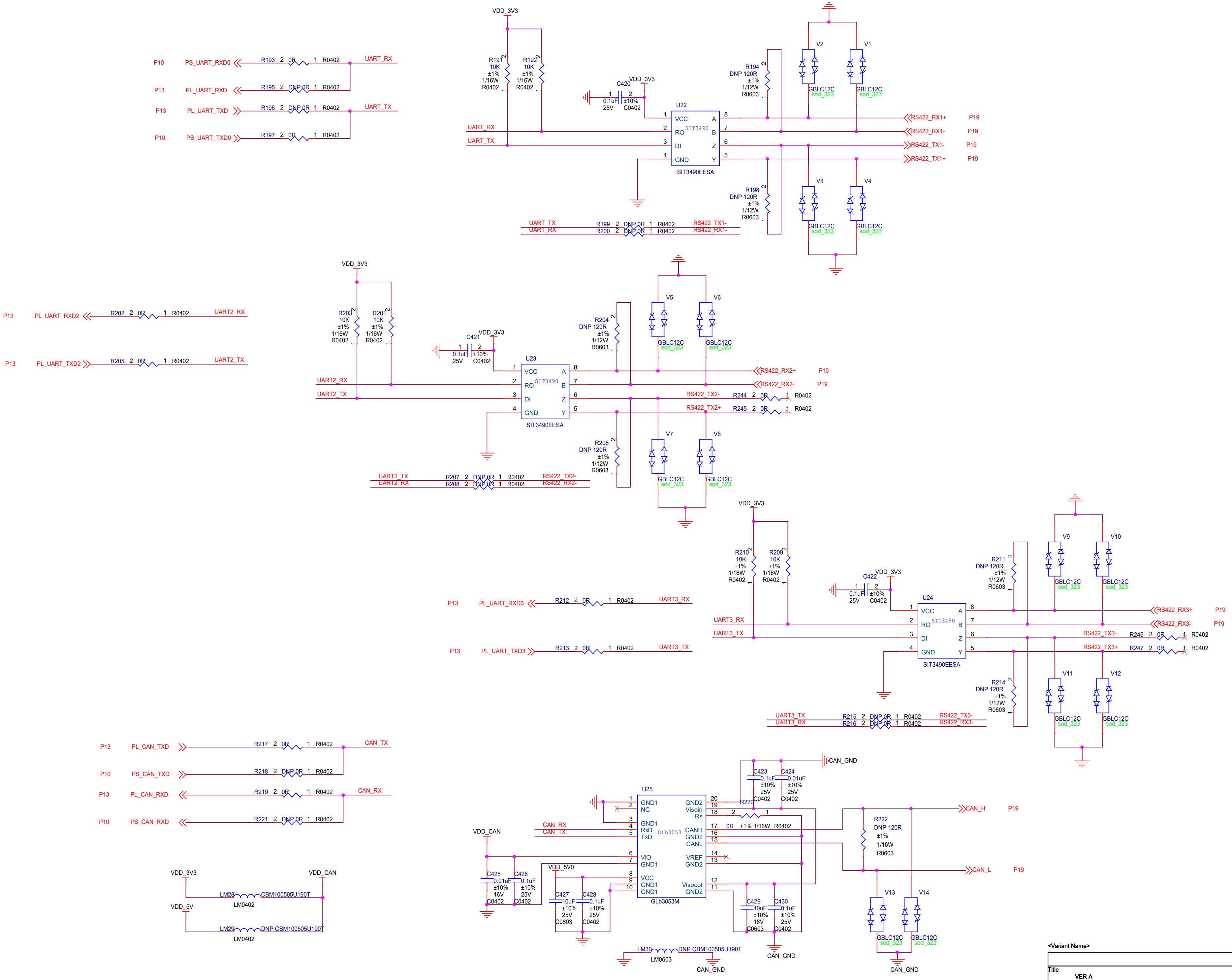

P10 PS_UART_RXD0
R193 2 0R 1 R0402
UART_RX
P13 PL_UART_RXD
R195 2 DNP 0R 1 R0402
P13 PL_UART_TXD
R196 2 DNP 0R 1 R0402
UART_TX
P10 PS_UART_TXD0
R197 2 0R 1 R0402
VDD_3V3
R191 10K ±1% 1/16W R0402
R192 10K ±1% 1/16W R0402
C420 0.1uF 25V ±10% C0402
VDD_3V3
U22
VCC RO DI GND A B Z Y
SIT3490
SIT3490EESA
UART_RX
UART_TX
R194 DNP 120R ±1% 1/12W R0603
R198 DNP 120R ±1% 1/12W R0603
V1 V2 V3 V4
GBLC12C sod_323
RS422_RX1+ P19
RS422_RX1- P19
RS422_TX1- P19
RS422_TX1+ P19
UART_TX R199 2 DNP 0R 1 R0402 RS422_TX1-
UART_RX R200 2 DNP 0R 1 R0402 RS422_RX1-
P13 PL_UART_RXD2
R202 2 0R 1 R0402
UART2_RX
P13 PL_UART_TXD2
R205 2 0R 1 R0402
UART2_TX
VDD_3V3
R203 10K ±1% 1/16W R0402
R201 10K ±1% 1/16W R0402
C421 0.1uF 25V ±10% C0402
VDD_3V3
U23
SIT3490EESA
UART2_RX
UART2_TX
R204 DNP 120R ±1% 1/12W R0603
R206 DNP 120R ±1% 1/12W R0603
V5 V6 V7 V8
GBLC12C sod_323
RS422_RX2+ P19
RS422_RX2- P19
RS422_TX2- R244 2 0R 1 R0402
RS422_TX2+ R245 2 0R 1 R0402
UART2_TX R207 2 DNP 0R 1 R0402 RS422_TX2-
UART2_RX R208 2 DNP 0R 1 R0402 RS422_RX2-
VDD_3V3
R210 10K ±1% 1/16W R0402
R209 10K ±1% 1/16W R0402
P13 PL_UART_RXD3
R212 2 0R 1 R0402
UART3_RX
P13 PL_UART_TXD3
R213 2 0R 1 R0402
UART3_TX
C422 0.1uF 25V ±10% C0402
VDD_3V3
U24
SIT3490EESA
UART3_RX
UART3_TX
R211 DNP 120R ±1% 1/12W R0603
R214 DNP 120R ±1% 1/12W R0603
V9 V10 V11 V12
GBLC12C sod_323
RS422_RX3+ P19
RS422_RX3- P19
RS422_TX3- R246 2 0R 1 R0402
RS422_TX3+ R247 2 0R 1 R0402
UART3_TX R215 2 DNP 0R 1 R0402 RS422_TX3-
UART3_RX R216 2 DNP 0R 1 R0402 RS422_RX3-
P13 PL_CAN_TXD
R217 2 0R 1 R0402
CAN_TX
P10 PS_CAN_TXD
R218 2 DNP 0R 1 R0402
P13 PL_CAN_RXD
R219 2 0R 1 R0402
CAN_RX
P10 PS_CAN_RXD
R221 2 DNP 0R 1 R0402
VDD_3V3
VDD_CAN
LM28 CBM100505U190T LM0402
VDD_5V
LM29 DNP CBM100505U190T LM0402
CAN_GND
C423 0.1uF ±10% 25V C0402
C424 0.01uF ±10% 25V C0402
U25
GND1 NC GND1 RxD TxD VIO GND1 VCC GND1 GND1
GND2 Visoin Rs CANH GND2 CANL VREF GND2 Visoout GND2
GLb3053
GLb3053M
R220 0R ±1% 1/16W R0402
CAN_RX
CAN_TX
VDD_CAN
VDD_5V0
C425 0.01uF ±10% 16V C0402
C426 0.1uF ±10% 25V C0402
C427 10uF ±10% 25V C0603
C428 0.1uF ±10% 25V C0402
C429 10uF ±10% 16V C0603
C430 0.1uF ±10% 25V C0402
R222 DNP 120R ±1% 1/16W R0603
CAN_H P19
CAN_L P19
V13 V14
GBLC12C sod_323
LM30 DNP CBM100505U190T LM0603
CAN_GND
CAN_GND
CAN_GND

<Variant Name>

Title
VER A

Size C
Document Number LY-SGM-A001A
Rev A

Date: Saturday, May 25, 2024
Sheet 18 of 19

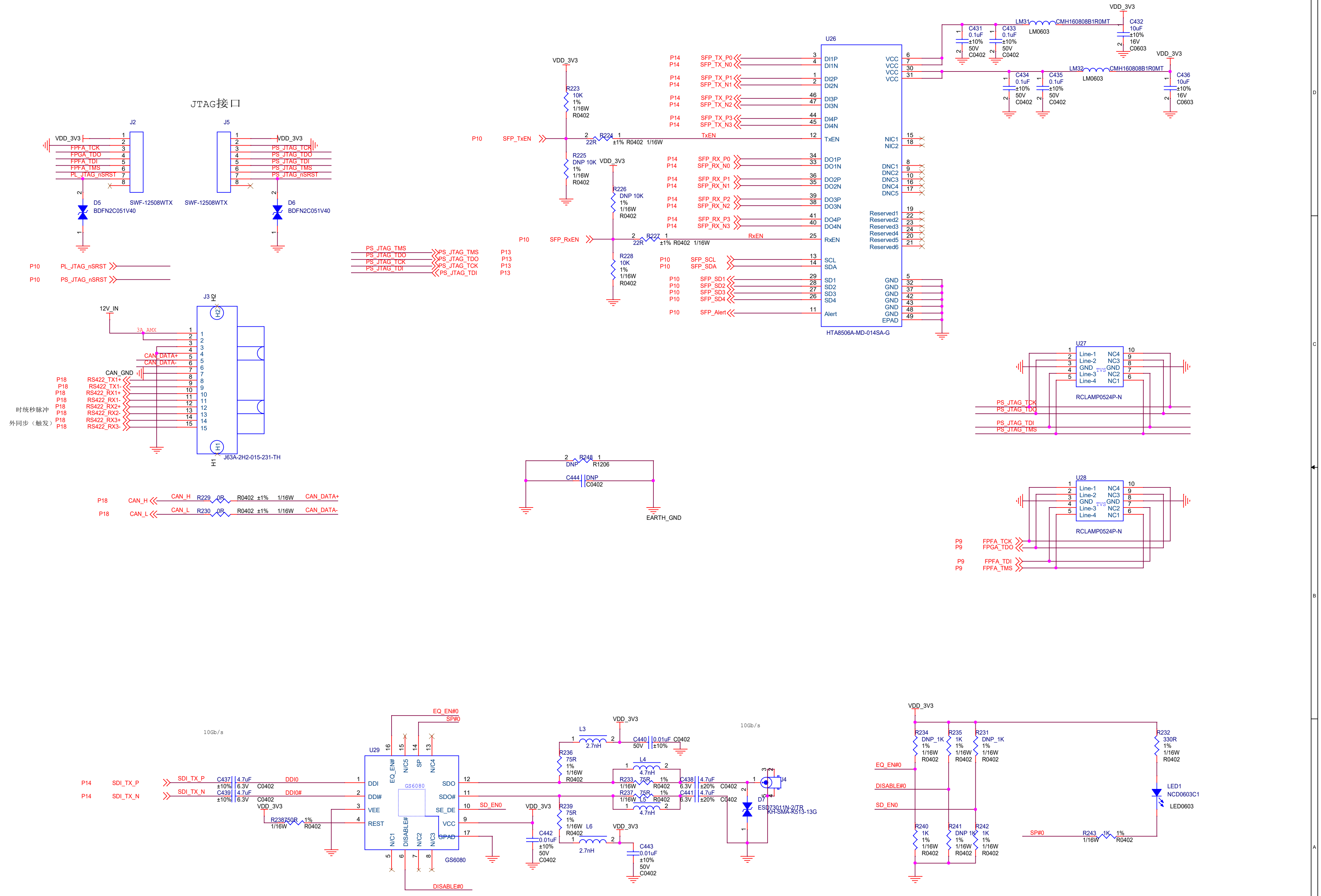
JTAG接口
J2
J5
VDD_3V3
FPFA_TCK
FPGA_TDO
FPFA_TDI
FPFA_TMS
PL_JTAG_nSRST
PS_JTAG_TCK
PS_JTAG_TDO
PS_JTAG_TDI
PS_JTAG_TMS
PS_JTAG_nSRST
SWF-12508WTX
D5
D6
BDFN2C051V40
P10
PL_JTAG_nSRST
PS_JTAG_nSRST
P13
12V_IN
3A_AMX
J3
H2
H1
J63A-2H2-015-231-TH
CAN_DATA+
CAN_DATA-
CAN_GND
P18
RS422_TX1+
RS422_TX1-
RS422_RX1+
RS422_RX1-
RS422_RX2+
RS422_RX2-
RS422_RX3+
RS422_RX3-
时统秒脉冲
外同步（触发）
CAN_H
CAN_L
R229
R230
0R
R0402 ±1% 1/16W
R248
DNP
R1206
C444
C0402
EARTH_GND
U26
HTA8506A-MD-014SA-G
SFP_TX_P0
SFP_TX_N0
SFP_TX_P1
SFP_TX_N1
SFP_TX_P2
SFP_TX_N2
SFP_TX_P3
SFP_TX_N3
SFP_TxEN
TxEN
SFP_RX_P0
SFP_RX_N0
SFP_RX_P1
SFP_RX_N1
SFP_RX_P2
SFP_RX_N2
SFP_RX_P3
SFP_RX_N3
SFP_RxEN
RxEN
SFP_SCL
SFP_SDA
SFP_SD1
SFP_SD2
SFP_SD3
SFP_SD4
SFP_Alert
P14
R223 10K 1% 1/16W R0402
R224 22R ±1% R0402 1/16W
R225 DNP 10K 1% 1/16W R0402
R226 DNP 10K 1% 1/16W R0402
R227 22R ±1% R0402 1/16W
R228 10K 1% 1/16W R0402
DI1P DI1N DI2P DI2N DI3P DI3N DI4P DI4N
DO1P DO1N DO2P DO2N DO3P DO3N DO4P DO4N
SCL SDA SD1 SD2 SD3 SD4 Alert
VCC NIC1 NIC2 DNC1 DNC2 DNC3 DNC4 DNC5
Reserved1 Reserved2 Reserved3 Reserved4 Reserved5 Reserved6
GND EPAD
LM31 LM32 CMH160808B1R0MT LM0603
C431 C433 C434 C435 0.1uF ±10% 50V C0402
C432 C436 10uF ±10% 16V C0603
U27
U28
Line-1 Line-2 GND Line-3 Line-4
NC4 NC3 GND NC2 NC1
TVS
RCLAMP0524P-N
P9
10Gb/s
U29
GS6080
SDI_TX_P
SDI_TX_N
C437 C439 4.7uF ±10% 6.3V C0402
DDI0
DDI0#
DDI DDI# VEE REST
EQ_EN# N/C5 SP N/C4
SDO SDO# SE_DE VCC GPAD
N/C1 DISABLE# N/C2 N/C3
EQ_EN#0
SP#0
DISABLE#0
SD_EN0
R238 750R 1% 1/16W R0402
L3 L4 L5 L6 2.7nH 4.7nH
R236 R239 75R 1% 1/16W R0402
R233 R237 75R 1% 1/16W R0402
C440 C442 C443 0.01uF ±10% 50V C0402
C438 C441 4.7uF ±20% 6.3V C0402
J4
D7
ESD73011N-2/TR
KH-SMA-K513-13G
R234 DNP_1K
R235 1K
R231 DNP_1K
R232 330R
R240 1K
R241 DNP 1K
R242 1K
R243 1K 1% 1/16W R0402
LED1
NCD0603C1
LED0603
DISABLE#0

<Variant Name>

Title
VER A

Size C
Document Number LY-SGM-A001A
Rev A

Date: Saturday, May 25, 2024 Sheet 19 of 19