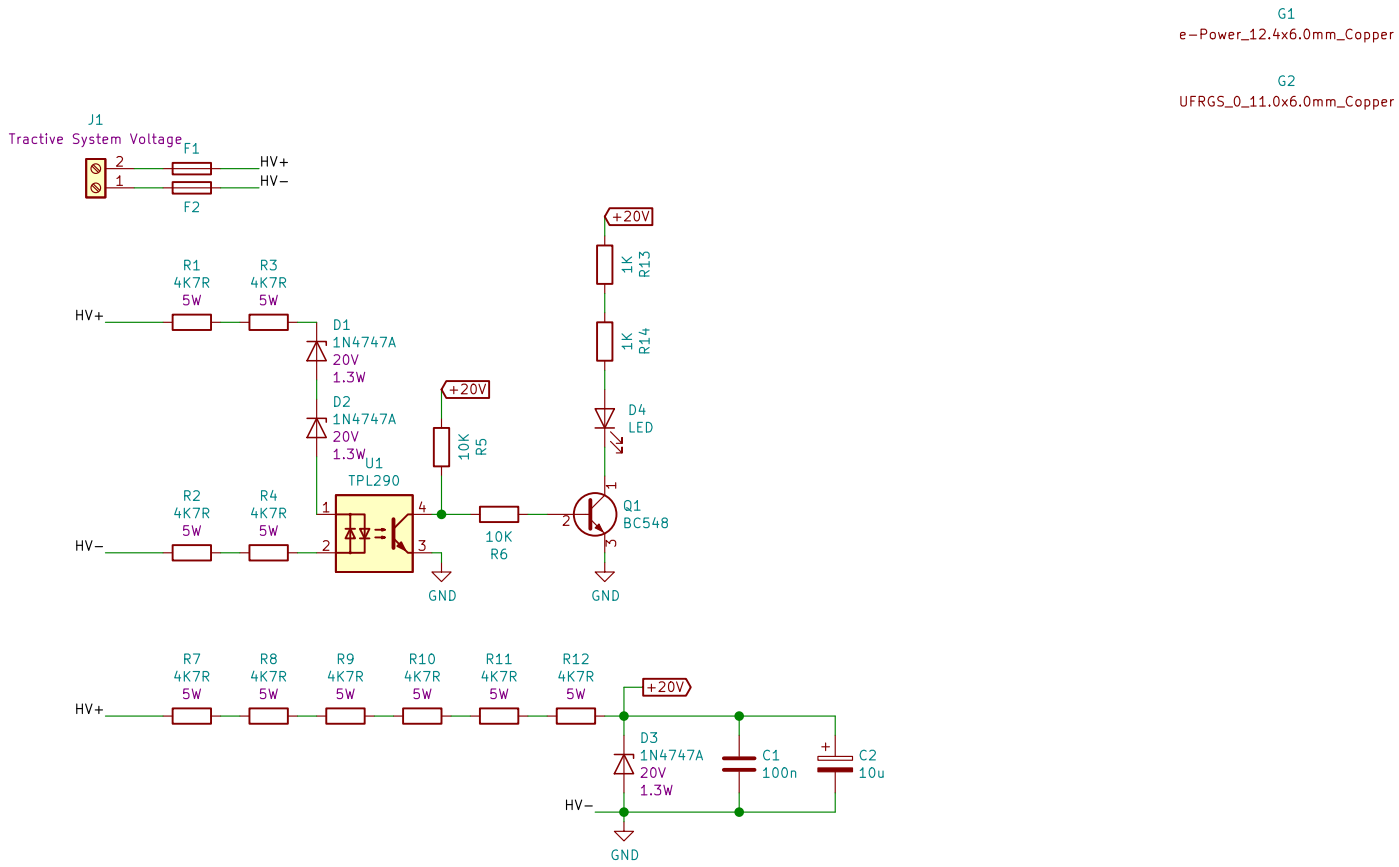

Sheet: /
File: AIL.sch

Title: AIL

Size: A4	Date: 2020-17-07	Rev:
KiCad E.D.A. eeschema (5.1.5)-3		Id: 1/1