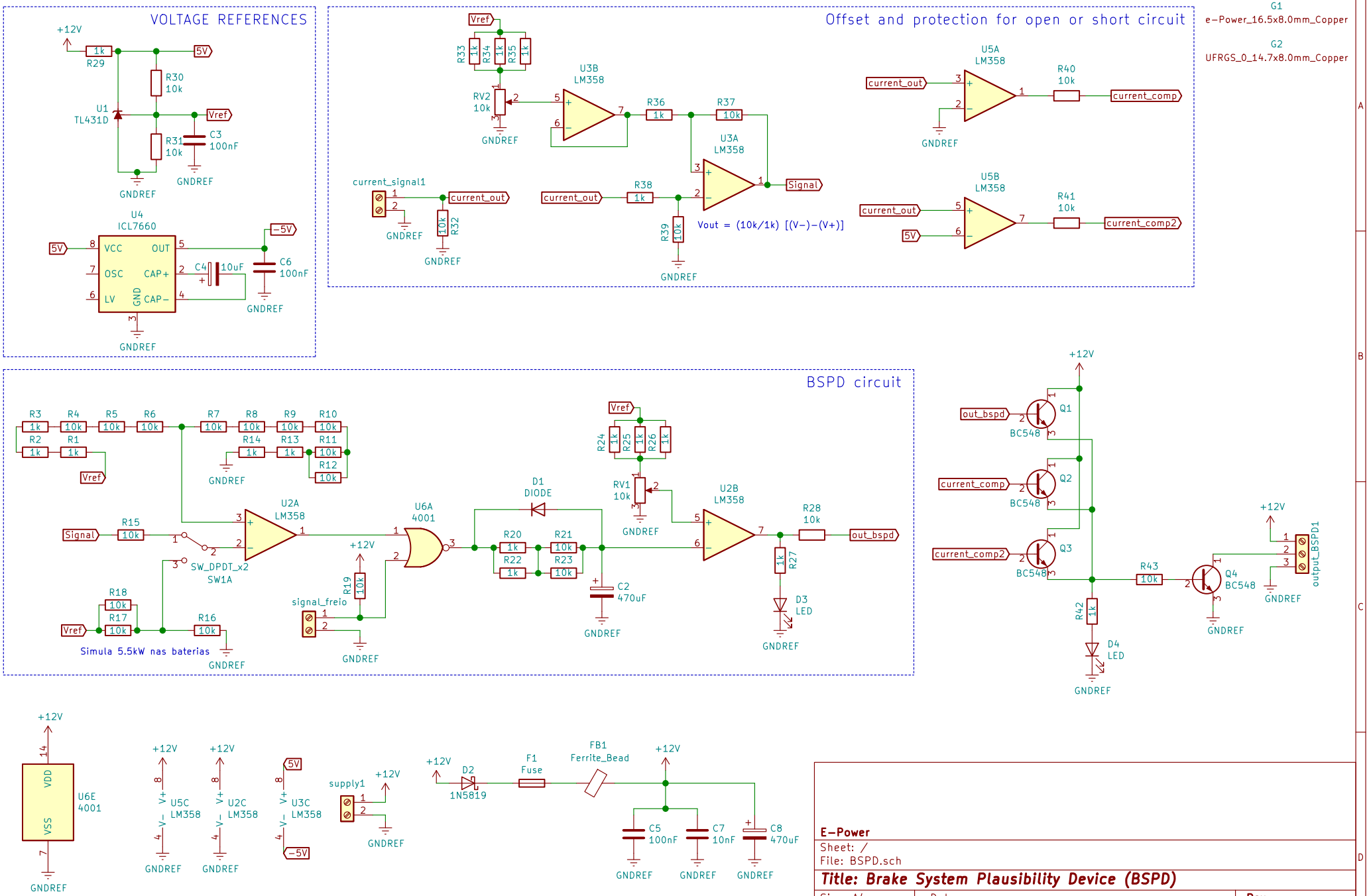
VOLTAGE REFERENCES
+12V
R29 1k
5V
R30 10k
U1 TL431D
Vref
R31 10k
C3 100nF
GNDREF
U4 ICL7660
VCC
OUT
OSC
CAP+
LV
GND
CAP−
C4 10uF
C6 100nF
−5V
Offset and protection for open or short circuit
R33 1k
R34 1k
R35 1k
RV2 10k
U3B LM358
R36 1k
R37 10k
U3A LM358
Signal
current_signal1
current_out
R32 10k
R38 1k
R39 10k
Vout = (10k/1k) [(V−)−(V+)]
U5A LM358
R40 10k
current_comp
U5B LM358
R41 10k
current_comp2
G1
e−Power_16.5x8.0mm_Copper
G2
UFRGS_0_14.7x8.0mm_Copper
BSPD circuit
R3 1k
R4 10k
R5 10k
R6 10k
R7 10k
R8 10k
R9 10k
R10 10k
R2 1k
R1 1k
R14 1k
R13 1k
R11 10k
R12 10k
U2A LM358
R15 10k
SW_DPDT_x2
SW1A
R18 10k
R17 10k
R16 10k
Simula 5.5kW nas baterias
R19 10k
signal_freio
U6A 4001
D1 DIODE
R20 1k
R21 10k
R22 1k
R23 10k
C2 470uF
R24 1k
R25 1k
R26 1k
RV1 10k
U2B LM358
R28 10k
R27 1k
D3 LED
out_bspd
Q1 BC548
Q2 BC548
Q3 BC548
R42 1k
D4 LED
R43 10k
Q4 BC548
output_BSPD1
U6E 4001
VDD
VSS
U5C LM358
U2C LM358
U3C LM358
supply1
D2 1N5819
F1 Fuse
FB1 Ferrite_Bead
C5 100nF
C7 10nF
C8 470uF
E−Power
Sheet: /
File: BSPD.sch
Title: Brake System Plausibility Device (BSPD)
Size: A4
Date:
Rev:
KiCad E.D.A. eeschema (5.1.5)−3
Id: 1/1