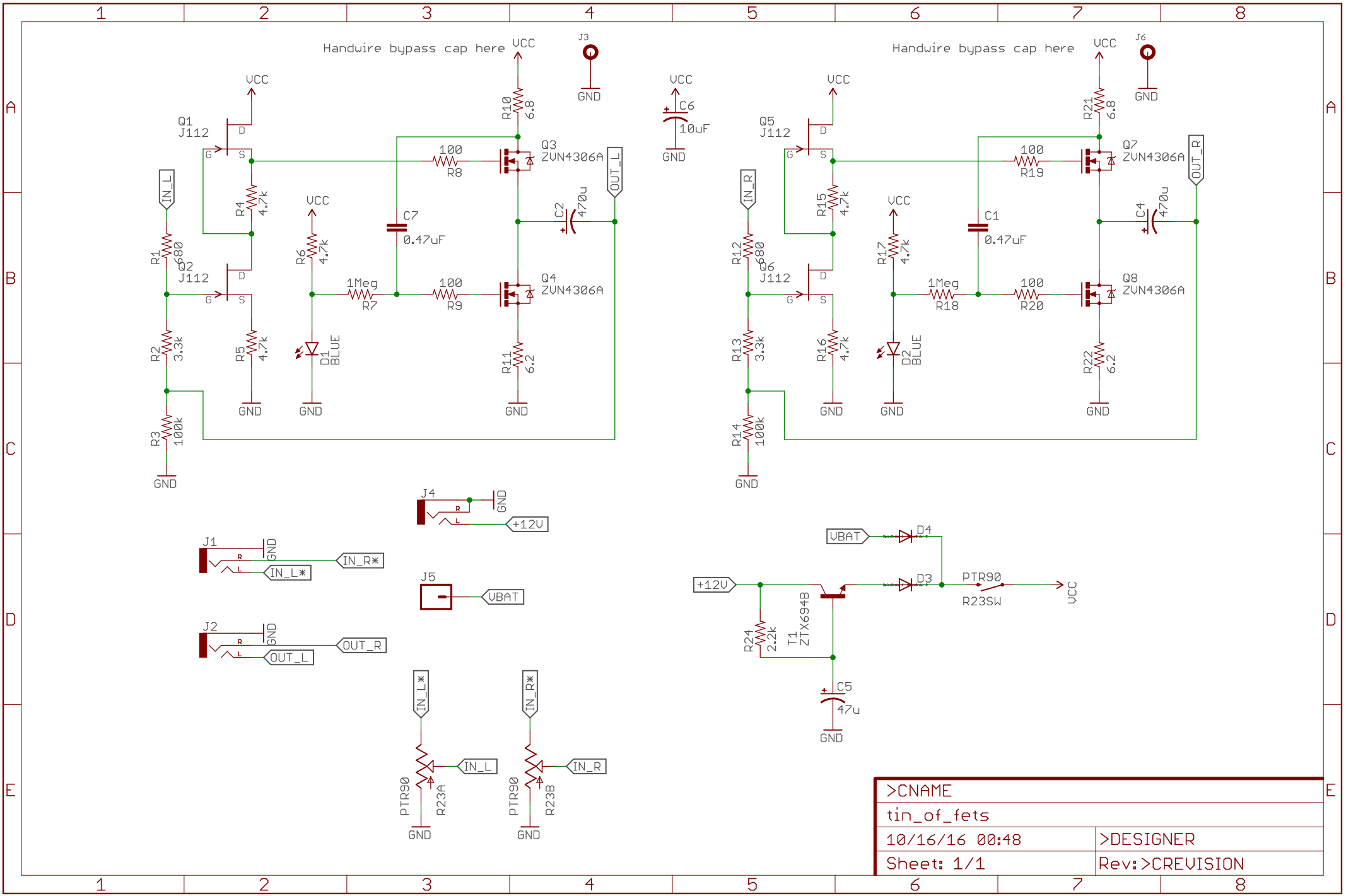
Handwire bypass cap here
VCC
J3
GND
Q1
J112
Q2
J112
IN_L
R1
680
R2
3.3k
R3
100k
R4
4.7k
R5
4.7k
R6
4.7k
D1
BLUE
C7
0.47uF
1Meg
R7
100
R8
100
R9
R10
6.8
Q3
ZVN4306A
Q4
ZVN4306A
C2
470u
OUT_L
R11
6.2
C6
10uF
Handwire bypass cap here
J6
Q5
J112
Q6
J112
IN_R
R12
680
R13
3.3k
R14
100k
R15
4.7k
R16
4.7k
R17
4.7k
D2
BLUE
C1
0.47uF
1Meg
R18
100
R19
100
R20
R21
6.8
Q7
ZVN4306A
Q8
ZVN4306A
C4
470u
OUT_R
R22
6.2
J4
+12V
J1
IN_R*
IN_L*
J5
VBAT
J2
OUT_R
OUT_L
D4
D3
PTR90
R23SW
T1
ZTX694B
R24
2.2k
C5
47u
PTR90
R23A
PTR90
R23B
>CNAME
tin_of_fets
10/16/16 00:48
>DESIGNER
Sheet: 1/1
Rev:>CREVISION