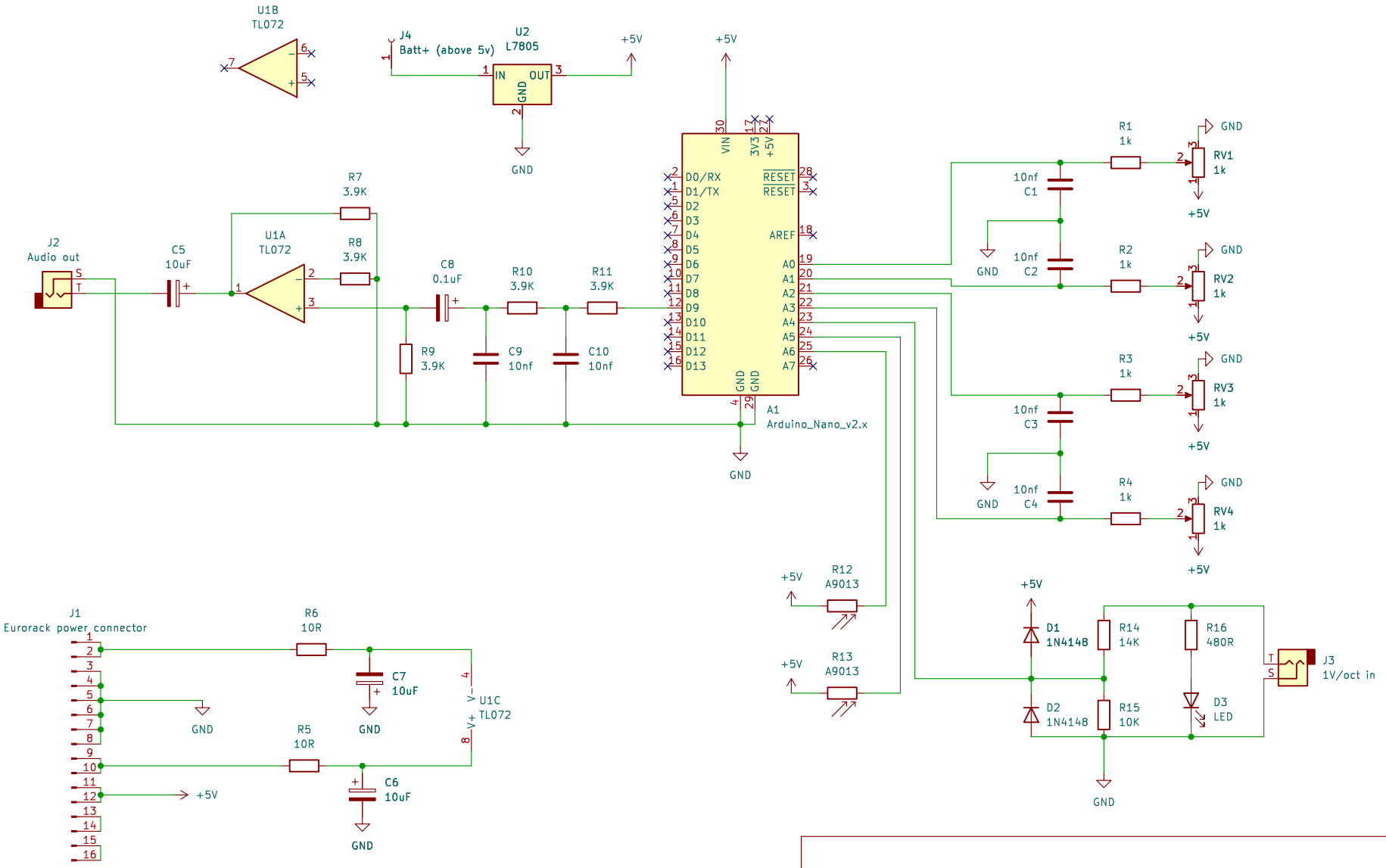

inspired by Hagiwo

made by e-garbage

Sheet: /

File: Mozzi Osc plateform v1.0.kicad_sch

Title: Mozzi Arduino Nano osc plateform

Size: A4	Date: 2023-03-20	**Rev: 1.0**
KiCad E.D.A. kicad 7.0.1		Id: 1/1