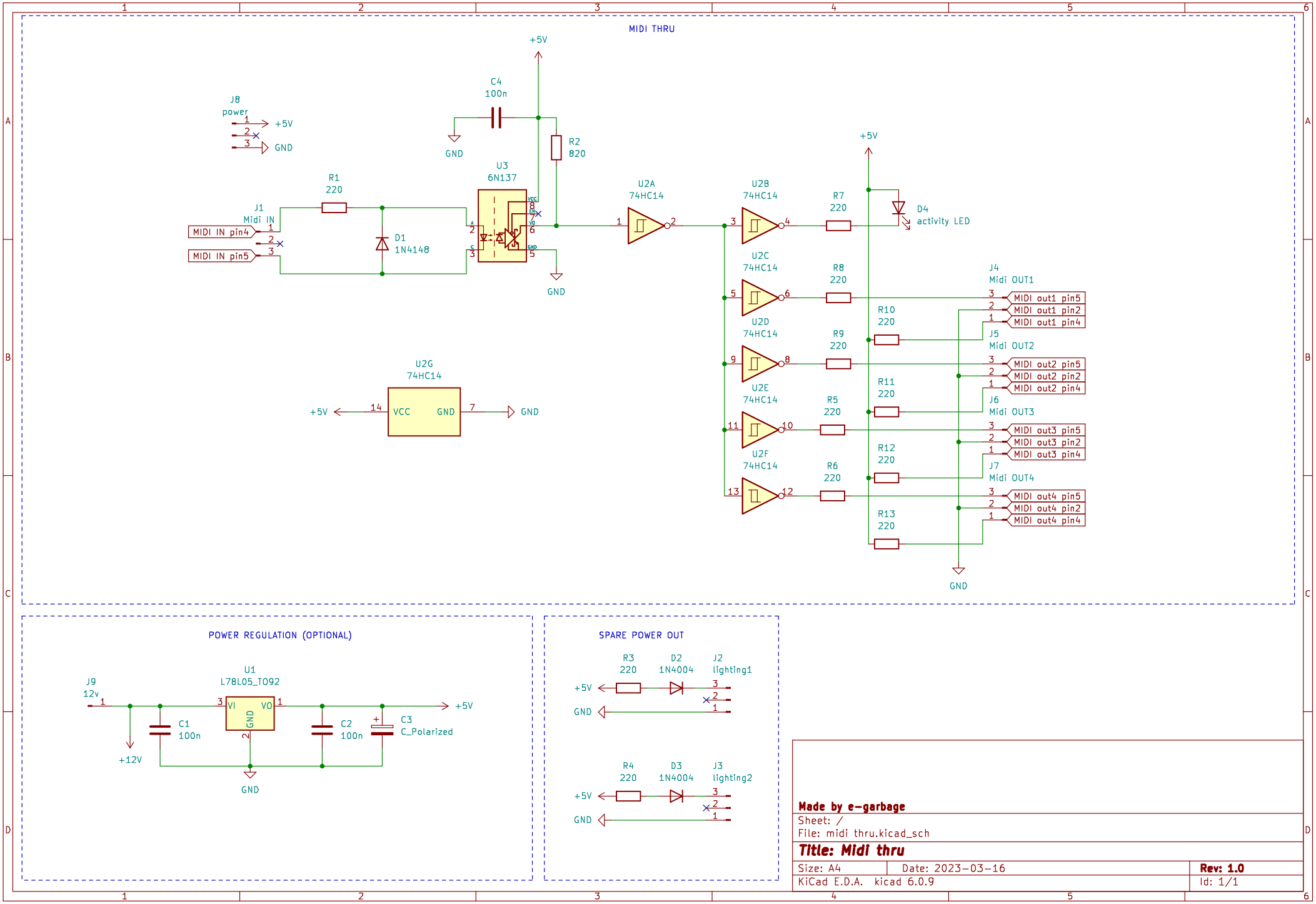
MIDI THRU
J8
power
+5V
GND
C4
100n
R2
820
U3
6N137
R1
220
J1
Midi IN
MIDI IN pin4
MIDI IN pin5
D1
1N4148
U2A
74HC14
U2B
74HC14
U2C
74HC14
U2D
74HC14
U2E
74HC14
U2F
74HC14
U2G
74HC14
VCC
GND
R7
220
R8
220
R9
220
R5
220
R6
220
R10
220
R11
220
R12
220
R13
220
D4
activity LED
J4
Midi OUT1
MIDI out1 pin5
MIDI out1 pin2
MIDI out1 pin4
J5
Midi OUT2
MIDI out2 pin5
MIDI out2 pin2
MIDI out2 pin4
J6
Midi OUT3
MIDI out3 pin5
MIDI out3 pin2
MIDI out3 pin4
J7
Midi OUT4
MIDI out4 pin5
MIDI out4 pin2
MIDI out4 pin4
POWER REGULATION (OPTIONAL)
J9
12v
+12V
U1
L78L05_TO92
VI
VO
GND
C1
100n
C2
100n
C3
C_Polarized
SPARE POWER OUT
R3
220
D2
1N4004
J2
lighting1
R4
220
D3
1N4004
J3
lighting2
Made by e-garbage
Sheet: /
File: midi thru.kicad_sch
Title: Midi thru
Size: A4
Date: 2023-03-16
Rev: 1.0
KiCad E.D.A. kicad 6.0.9
Id: 1/1