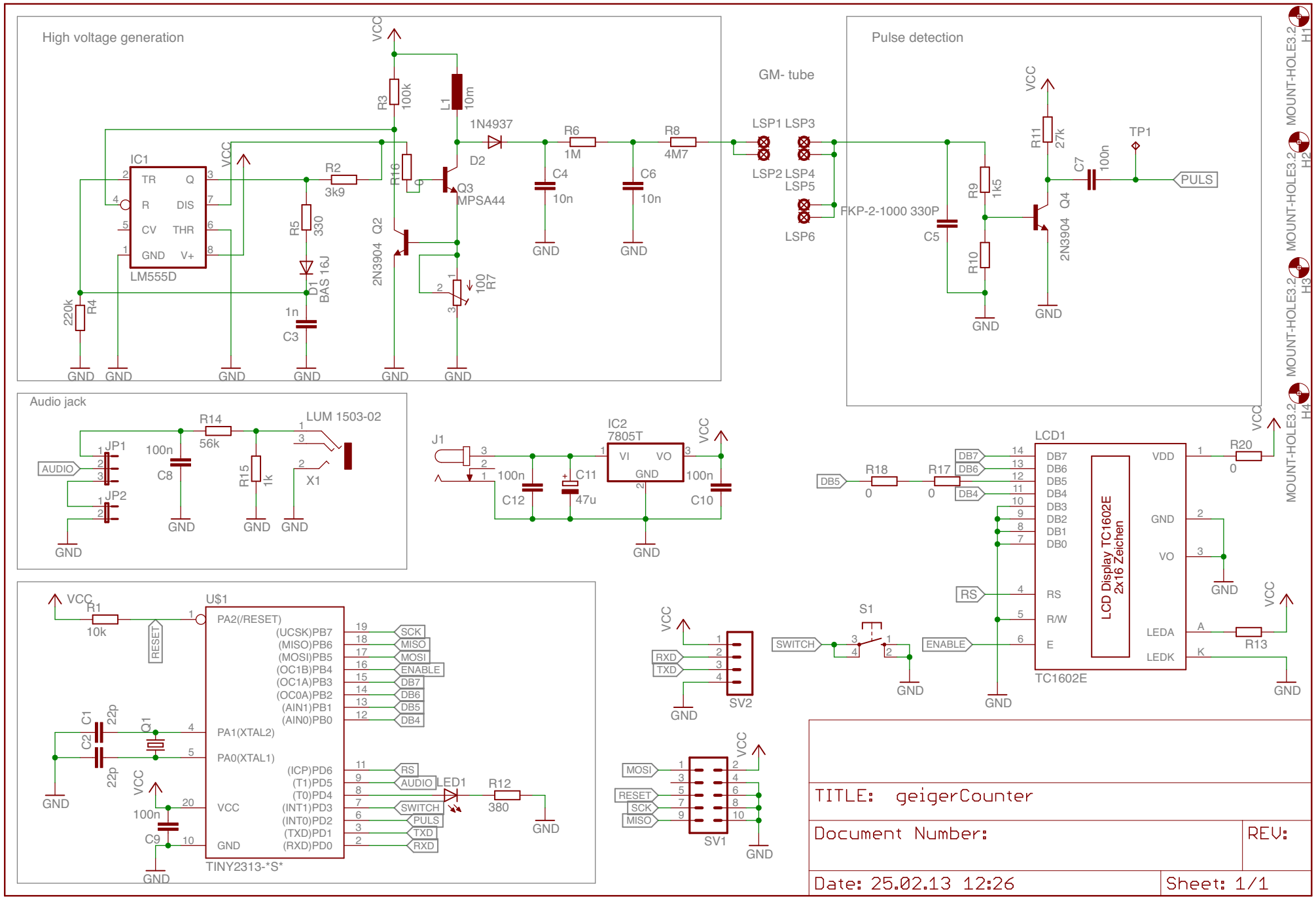
High voltage generation
IC1
LM555D
TR
Q
R
DIS
CV
THR
GND
V+
VCC
R3 100k
L1 10m
1N4937
D2
R6 1M
R8 4M7
R2 3k9
R16 9
Q3 MPSA44
C4 10n
C6 10n
R5 330
D1 BAS 16J
2N3904 Q2
R7 100
R4 220k
1n C3
GND
GM- tube
LSP1 LSP3
LSP2 LSP4
LSP5
LSP6
FKP-2-1000 330P
C5
Pulse detection
R9 1k5
R10
R11 27k
C7 100n
TP1
PULS
2N3904 Q4
Audio jack
JP1
JP2
AUDIO
100n C8
R14 56k
R15 1k
LUM 1503-02
X1
J1
IC2 7805T
VI
VO
C11 47u
C12
C10
LCD1
DB7
DB6
DB5
DB4
DB3
DB2
DB1
DB0
RS
R/W
E
VDD
LEDA
LEDK
LCD Display TC1602E 2x16 Zeichen
TC1602E
R18 0
R17 0
R20 0
R13
S1
SWITCH
ENABLE
U$1
TINY2313-*S*
PA2(/RESET)
(UCSK)PB7
(MISO)PB6
(MOSI)PB5
(OC1B)PB4
(OC1A)PB3
(OC0A)PB2
(AIN1)PB1
(AIN0)PB0
PA1(XTAL2)
PA0(XTAL1)
(ICP)PD6
(T1)PD5
(T0)PD4
(INT1)PD3
(INT0)PD2
(TXD)PD1
(RXD)PD0
R1 10k
RESET
C1 22p
C2 22p
Q1
C9 100n
SCK
MISO
MOSI
ENABLE
DB7
DB6
DB5
DB4
RS
AUDIO
SWITCH
PULS
TXD
RXD
LED1
R12 380
SV2
SV1
RESET
SCK
MISO
MOUNT-HOLE3.2
H1
H2
H3
H4
TITLE: geigerCounter
Document Number:
REV:
Date: 25.02.13 12:26
Sheet: 1/1