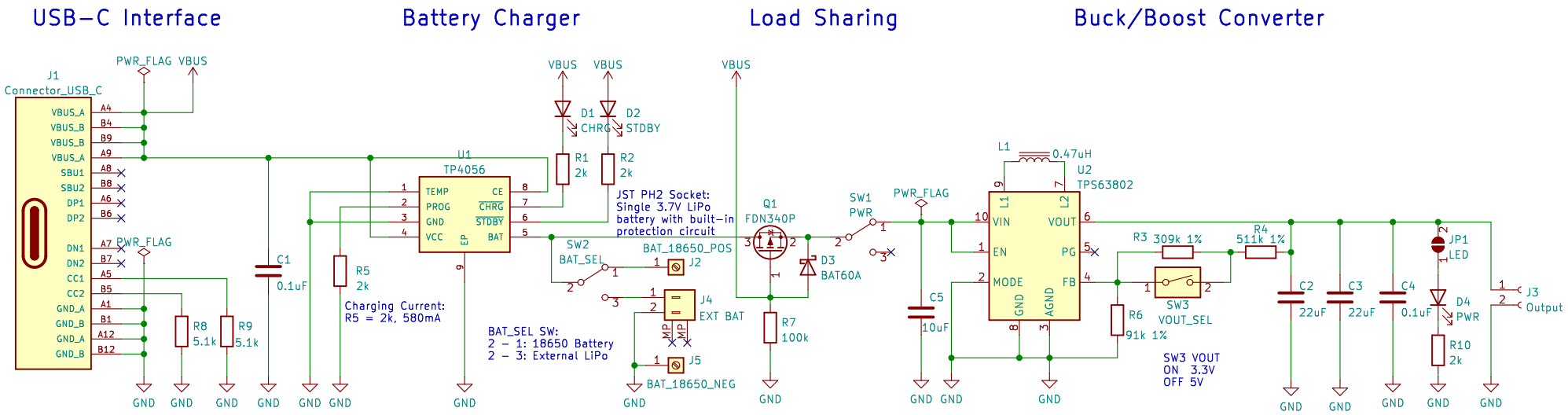

H1 MountingHole
H2 MountingHole
H3 MountingHole
H4 MountingHole

Title: LiPo + 18650 Charger with Load Sharing

E-Tinkers.com
www.e-tinkers.com

Sheet: /
File: Li-Po_charger.kicad_sch

Designed by: Henry Cheung

Size: A4	Date: 2024-11-12	**Rev: V1.0**
KiCad E.D.A. eeschema (6.0.11-0)		Id: 1/1