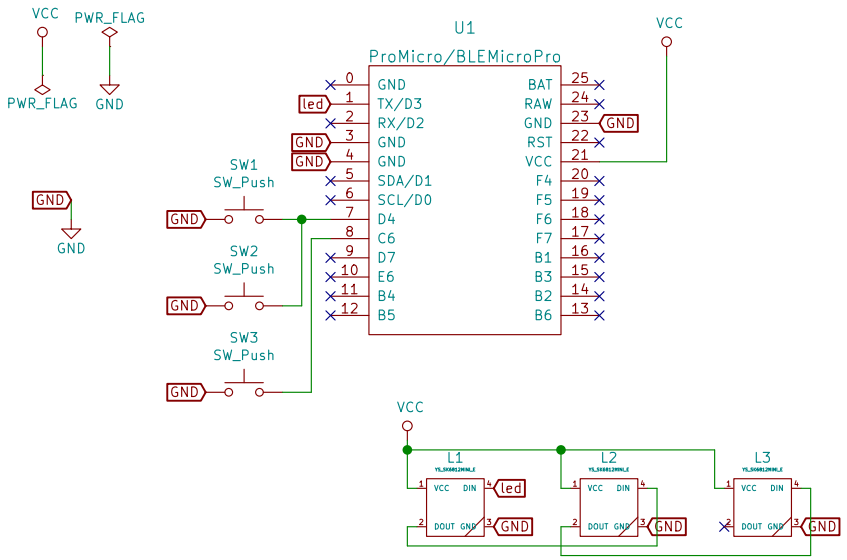

@e3w2q

Sheet: /

File: mx2u.sch

Title: MX2U! Keyboard

Size: A4	Date:	**Rev: 1**
KiCad E.D.A. kicad (5.0.2)-1		Id: 1/1