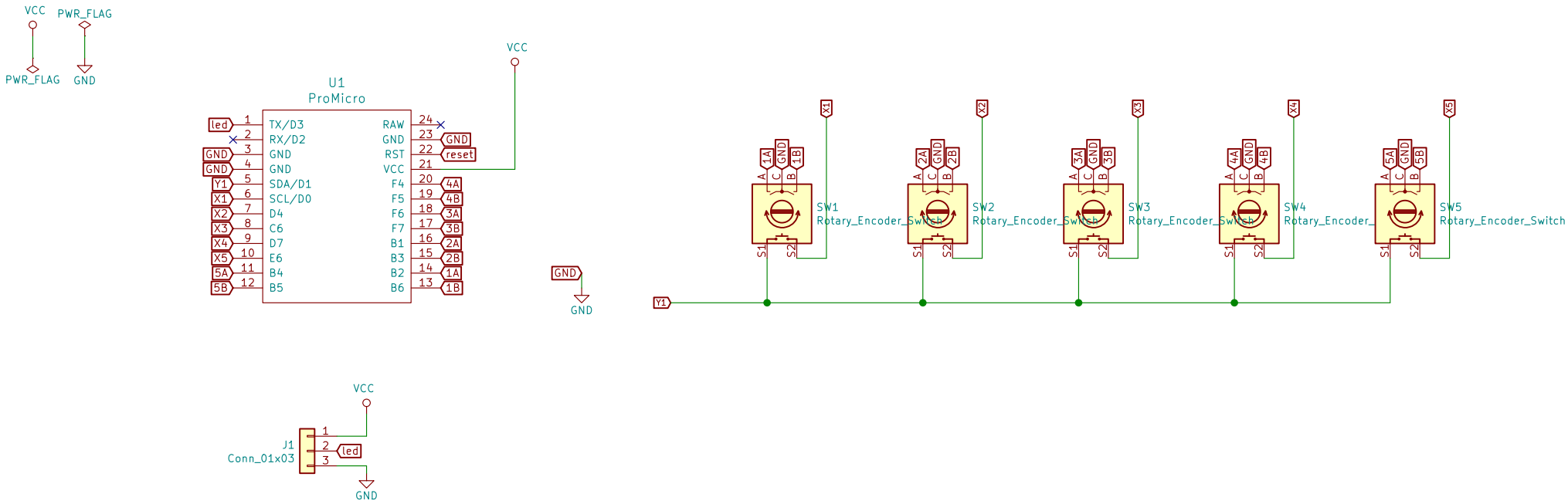

@e3w2q

Sheet: /

File: re5.sch

Title: RE5 Macropad

Size: A4	Date:	**Rev: 1**
KiCad E.D.A. kicad (5.0.2)-1		Id: 1/1