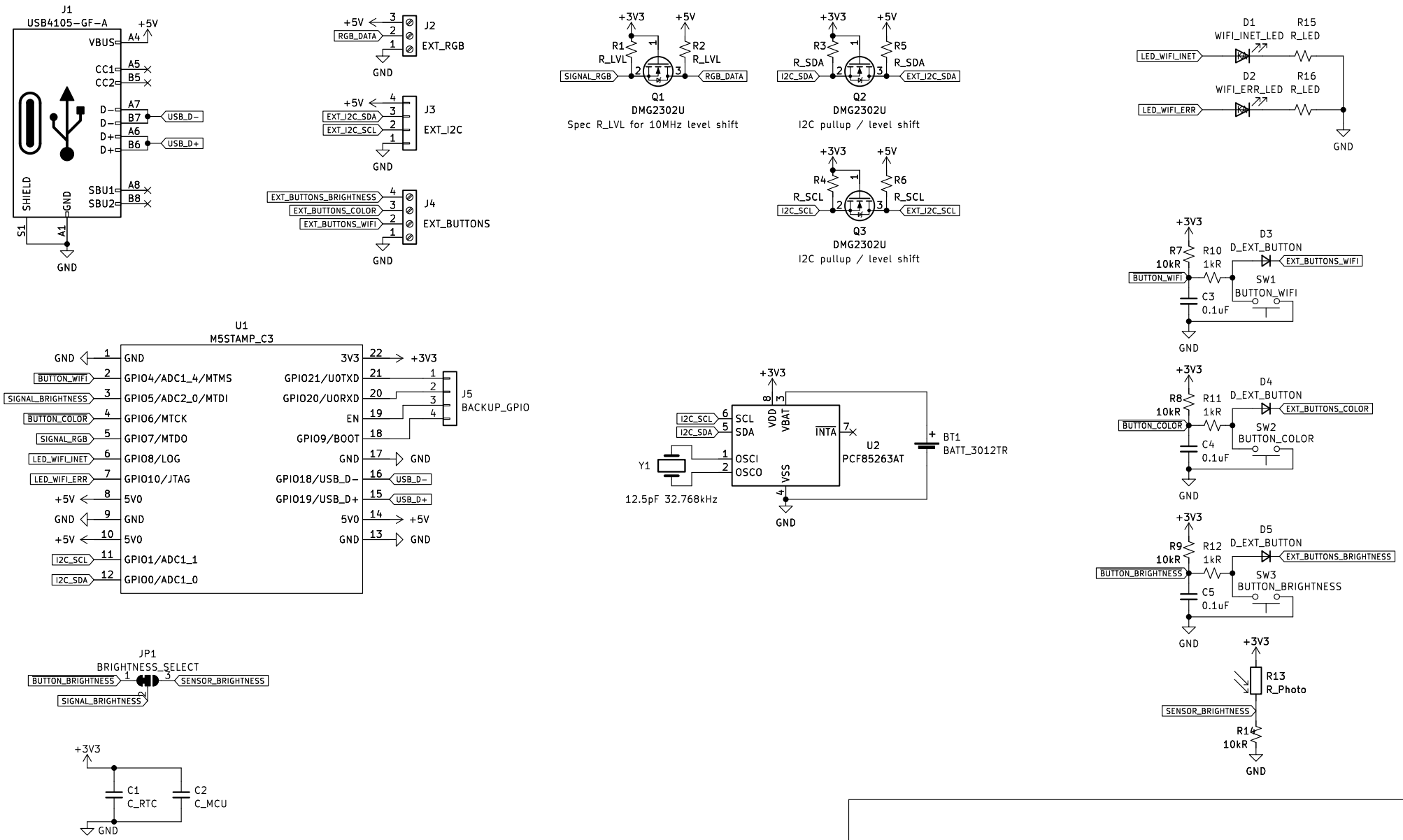

Sheet: /
File: ESP32C3_WordClock.kicad_sch

Title: ESP32-C3 Word Clock Controller

Size: A4	Date: 2024-05-20	Rev: A
KiCad E.D.A. 8.0.2		Id: 1/1