REVISION HISTORY			
REV	DESCRIPTION	DATE	APPROVED
-	INITIAL RELEASE	4/13/2023	

NOTES: (UNLESS OTHERWISE SPECIFIED)

1. SPECIFICATIONS AND DOCUMENTS:
   1.1. PANEL CONSTRUCTION SHALL BE IAW OH-SPEC-001, PANEL TYPE A, METHOD 1.
   1.2. ELECTRICAL CONNECTIONS SHALL BE IAW OH-INTERCONNECT.

2. ALL ITEMS NOT EXPLICITLY DEFINED IN THIS DRAWING ARE DEFINED BY THE MASTER CAD MODELS. ALL DIMENSIONS NOT DEFINED ON THIS DRAWING ARE CONTAINED WITHIN THE FOLLOWING MANUFACTURING FILES:
   2.1. FLAT PARTS: <MATERIAL>_<MATERIAL COLOR, IF APPLICABLE>_<THICKNESS, IN DECIMAL INCHES>_<PN>_<DESCRIPTION>_<REV>_V<VERSION NUMBER OF MODEL>.SVG

3. FN 6, 7 & 8 ARE INCLUDED WITH THEIR RESPECTIVE SWITCHES, AND SHOULD NOT BE ORDERED SEPARATELY.

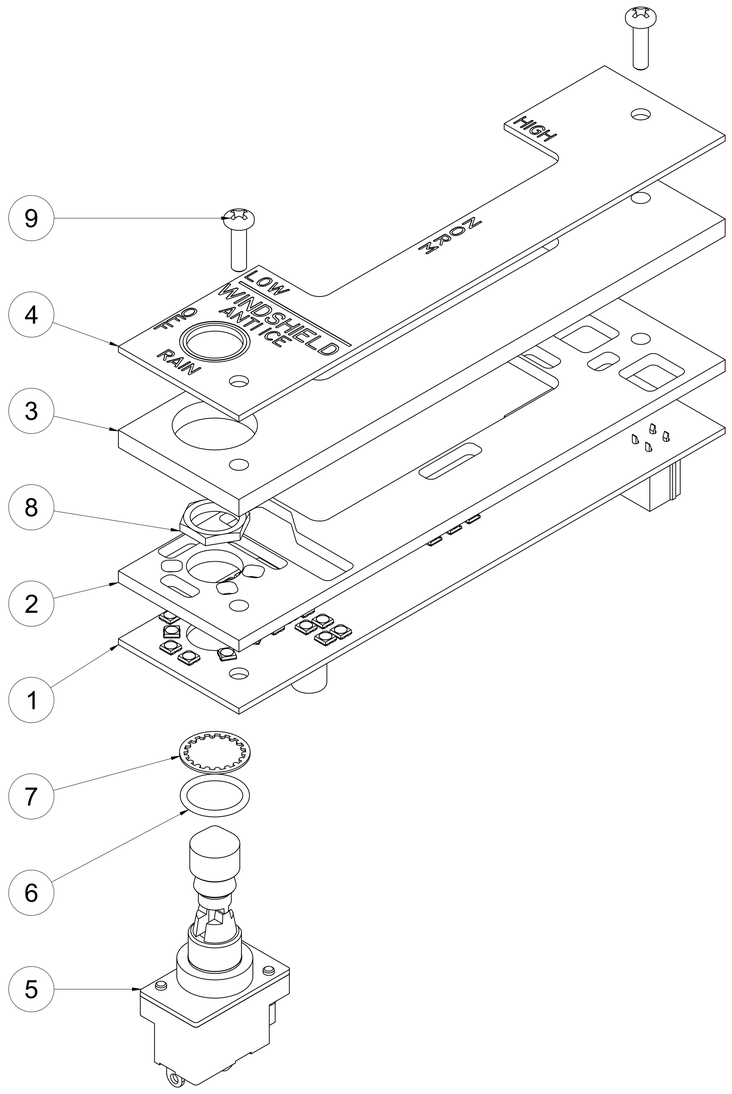

-1 ASSY
SCALE 1.5:1

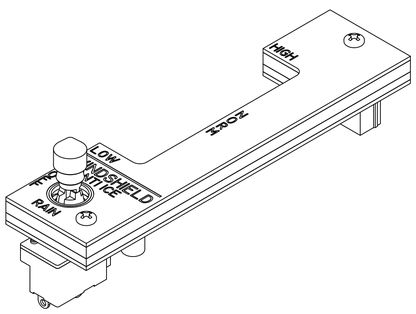

-1 ISO

ITEM	QTY	PART NUMBER	DESCRIPTION	MATERIAL
9	2	91249A148	PHS, #6-32 X .50, 18-8, BLK	SS
8	1	AT503M	HEX NUT FOR SWITCH, M12-1	SS
7	1	AT508	LOCK WASHER FOR SWITCH, M12	SS
6	1	AT537	O-RING FOR SWITCH, 12 MM ID	RBR
5	1	OHC0001-5	ASSY, SWITCH, S3AL, CONICAL BAT	
4	1	OH5A5A2-12	DEFOG LEGEND PLATE	RMRK
3	1	OH5A5A2-11	DEFOG LIGHTPLATE	ACRL
2	1	OH5A5A2-10	DEFOG BACKPLATE	ACRL
1	1	OH5A5A2-13	PCB, DEFOG	N/A

PARTS LIST

UNLESS OTHERWISE SPECIFIED:

DIMENSIONS ARE IN INCHES.

DUAL DIMENSIONS ARE IN MILIMETERS AND ENCLOSED IN SQUARE BRACKETS.

INTERPRET DRAWING IAW ASME Y14.100-2017.

INTERPRET DIM AND TOL IAW ASME Y14.5-2009.

REMOVE ALL BURRS AND SHARP EDGES TO .05 MAX.

DIMENSIONS APPLY BEFORE FINISH.

UOS INCH TOLERANCES ARE:

DECIMALS:
.X ± .1
.XX ± .03
.XXX ± .010

ANGLES:
MACHINED ± .5°
LOCATING ± .5°
FORMED ± 2°
CHAMFERS ± 5°

DRILLED HOLE DIAMETERS:
.0135 - .125: +.004/-.001
.126 - .250: +.005/-.001
.251 - .500: +.006/-.001
.501 - .750: +.008/-.001
.751 - 1.000: +.010/-.001
1.001 - 2.000: +.012/-.001

OPEN HORNET
https://www.OpenHornet.com

TITLE
ASSY, DEFOG PANEL

RIGHT CONSOLE

DESIGNED	J. STEENSEN	4/13/2023
CHECKED	J. STEENSEN	4/13/2023
DRAWN	B. LAZARUS	4/13/2023

CC BY NC SA

SIZE	DWG NO	REV
D	OH5A5A2-1	-
SCALE 1:1	DO NOT SCALE DWG	SHEET 1/1