REVISION HISTORY			
REV	DESCRIPTION	DATE	APPROVED
-	INITIAL RELEASE	4/7/2023	

NOTES: (UNLESS OTHERWISE SPECIFIED)

1. ALL ITEMS NOT EXPLICITLY DEFINED IN THIS DRAWING ARE DEFINED BY THE MASTER CAD MODELS. ALL DIMENSIONS NOT DEFINED ON THIS DRAWING ARE CONTAINED WITHIN THE FOLLOWING INTERMEDIATE FILES:
   - 1.1. FDM 3D PRINTED PARTS: FDM_<PN>_<REV>.v<VERSION # OF MODEL>.STL
   - 1.2. RESIN 3D PRINTED PARTS: RESIN_<PN>_<REV>.v<VERSION # OF MODEL>.STL
2. FN 12 & 13 ARE INCLUDED WITH THEIR RESPECTIVE SWITCHES, AND SHOULD NOT BE ORDERED SEPARATELY.
3. FINISH FN 1 & 2 IAW FED-STD-595, FS37038, BLACK. FN 3 FINISH SHALL BE FS36231, DARK GULL GREY.

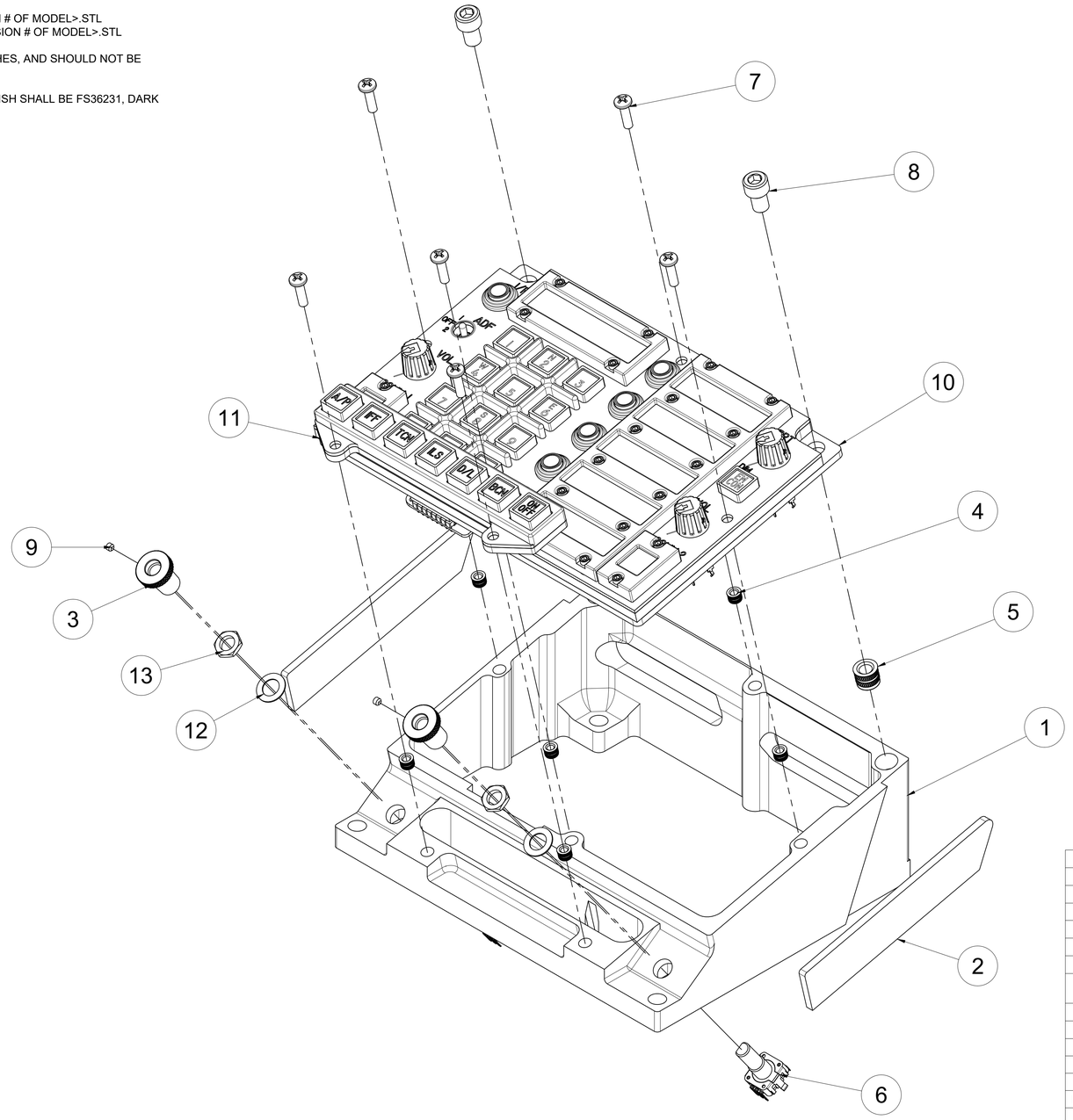

-1 ASSY

ITEM	QTY	PART NUMBER	DESCRIPTION	MATERIAL
13	2	PEC11R NUT	HEX NUT FOR SWITCH, M7 X .75	N/A
12	2	PEC11R WASHER	WASHER FOR SWITCH, M7, 12 MM OD	N/A
11	1	OH1A8A3-1	ASSY, AP SWITCH MODULE	
10	1	OH1A8A1-100	UFC PANEL V4	
9	2	92311A102	SET SCREW, 4-40 X .093 CUP POINT, 18-8	SS
8	2	91251A535	SHCS, .25-20 X .375, STEEL, BLK	STL
7	6	91249A148	PHS, #6-32 X .50, 18-8, BLK	SS
6	2	PEC11R-4220F-S0012	ENCODER, INC, QUAD, DETENT, SWITCH, 12PPR, 6MM DIA X 20MM FLAT SHAFT	STEEL
5	2	93365A160	INSERT, .25-20, BRASS, FOR PLASTICS	BRS
4	6	93365A130	INSERT, 6-32, BRASS, FOR PLASTIC	BRS
3	2	OH1A8A1-12	UFC COMM KNOB	RESN
2	2	OH1A8A1-11	FWD UFC GUARD	ACRL
1	1	OH1A8A1-10	UFC PANEL SUPPORT STRUCTURE	PETG

PARTS LIST

UNLESS OTHERWISE SPECIFIED:

DIMENSIONS ARE IN INCHES.

DUAL DIMENSIONS ARE IN MILIMETERS AND ENCLOSED IN SQUARE BRACKETS.

INTERPRET DRAWING IAW ASME Y14.100-2017.

INTERPRET DIM AND TOL IAW ASME Y14.5-2009.

REMOVE ALL BURRS AND SHARP EDGES TO .05 MAX.

DIMENSIONS APPLY BEFORE FINISH.

UOS INCH TOLERANCES ARE:

DECIMALS:
.X ± .1
.XX ± .03
.XXX ± .010

ANGLES:
MACHINED ± .5°
LOCATING ± .5°
FORMED ± 2°
CHAMFERS ± 5°

DRILLED HOLE DIAMETERS:
.0135 - .125: +.004/-.001
.126 - .250: +.005/-.001
.251 - .500: +.006/-.001
.501 - .750: +.008/-.001
.751 - 1.000: +.010/-.001
1.001 - 2.000: +.012/-.001

OPEN HORNET
https://www.OpenHornet.com

TITLE
ASSY, FWD UFC

UPPER INSTRUMENT PANEL

DESIGNED J. STEENSEN 04/07/2023
CHECKED
DRAWN J. STEENSEN 04/07/2023

CC BY NC SA

SIZE D | DWG NO OH1A8A1-1 | REV -

SCALE 1:1 | DO NOT SCALE DWG | SHEET 1/1