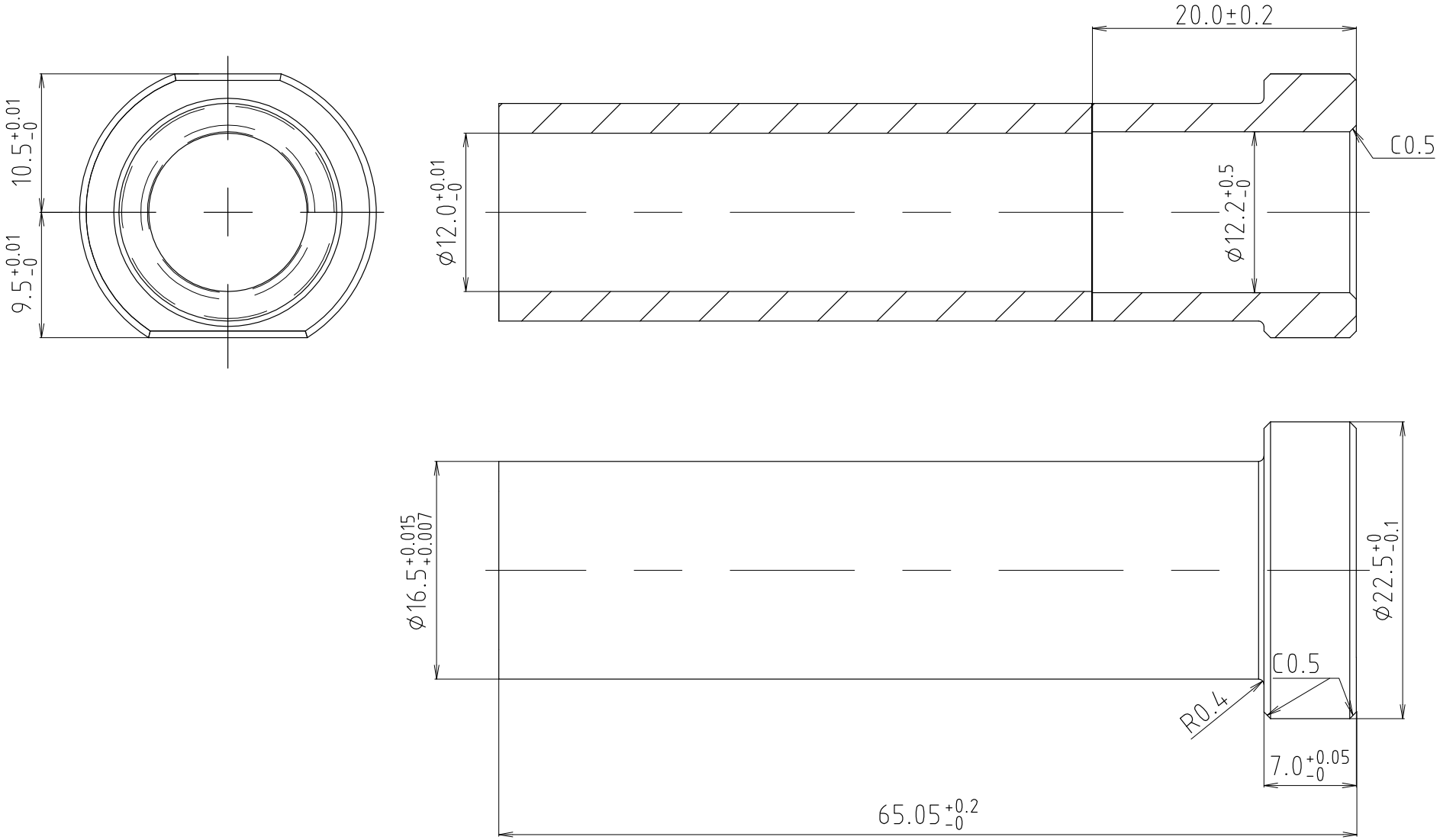
20.0±0.2
C0.5
10.5 +0.01 -0
9.5 +0.01 -0
⌀12.0 +0.01 -0
⌀12.2 +0.5 -0
⌀16.5 +0.015 +0.007
⌀22.5 +0 -0.1
C0.5
R0.4
7.0 +0.05 -0
65.05 +0.2 -0

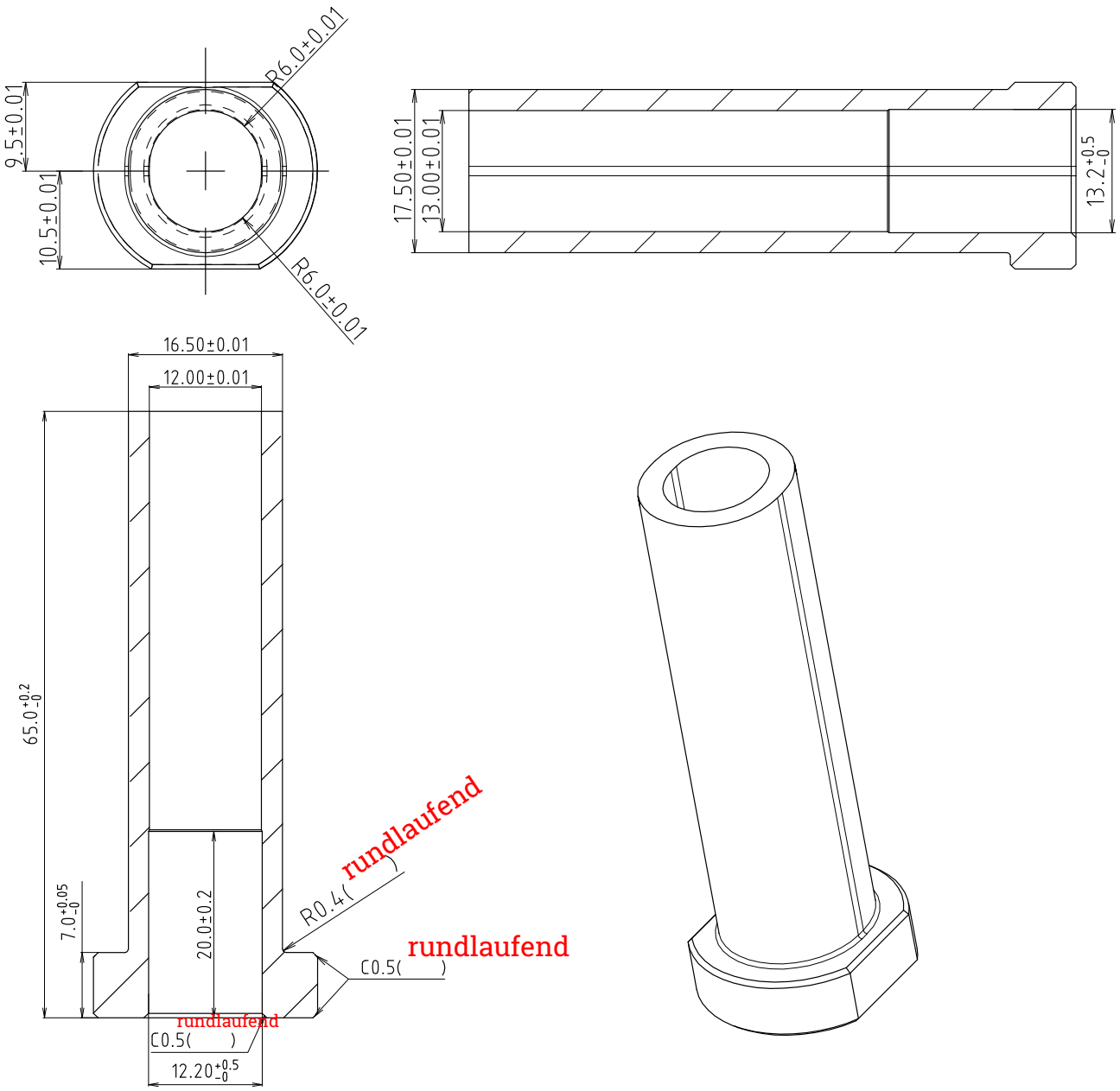
R6.0±0.01
9.5±0.01
10.5±0.01
R6.0±0.01
17.50±0.01
13.00±0.01
13.2+0.5 -0
16.50±0.01
12.00±0.01
65.0+0.2 -0
7.0+0.05 -0
20.0±0.2
R0.4(rundlaufend)
C0.5(rundlaufend)
rundlaufend
C0.5( )
12.20+0.5 -0

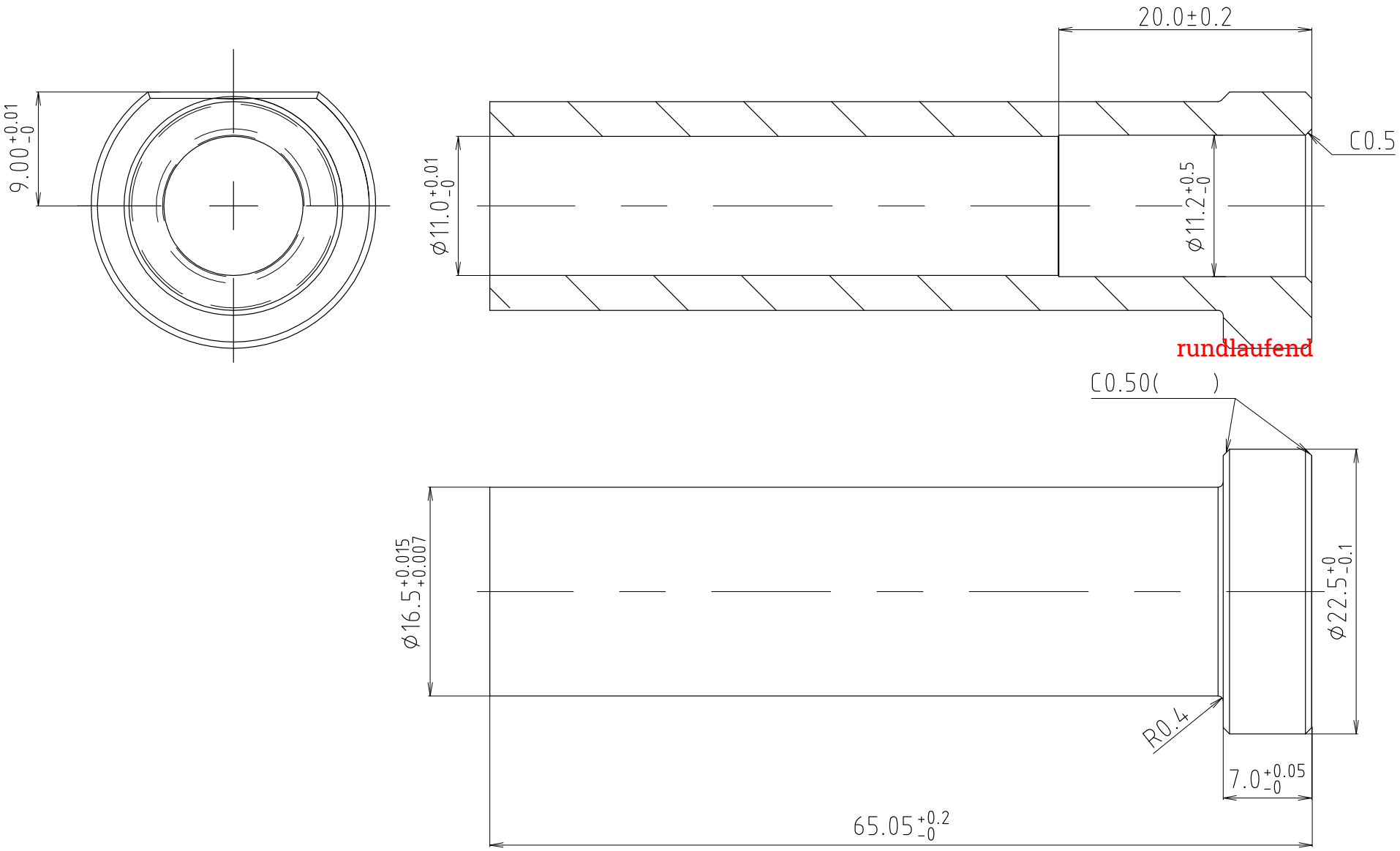
20.0±0.2
C0.5
9.00 +0.01 -0
⌀11.0 +0.01 -0
⌀11.2 +0.5 -0
rundlaufend
C0.50( )
⌀16.5 +0.015 +0.007
⌀22.5 +0 -0.1
R0.4
7.0 +0.05 -0
65.05 +0.2 -0

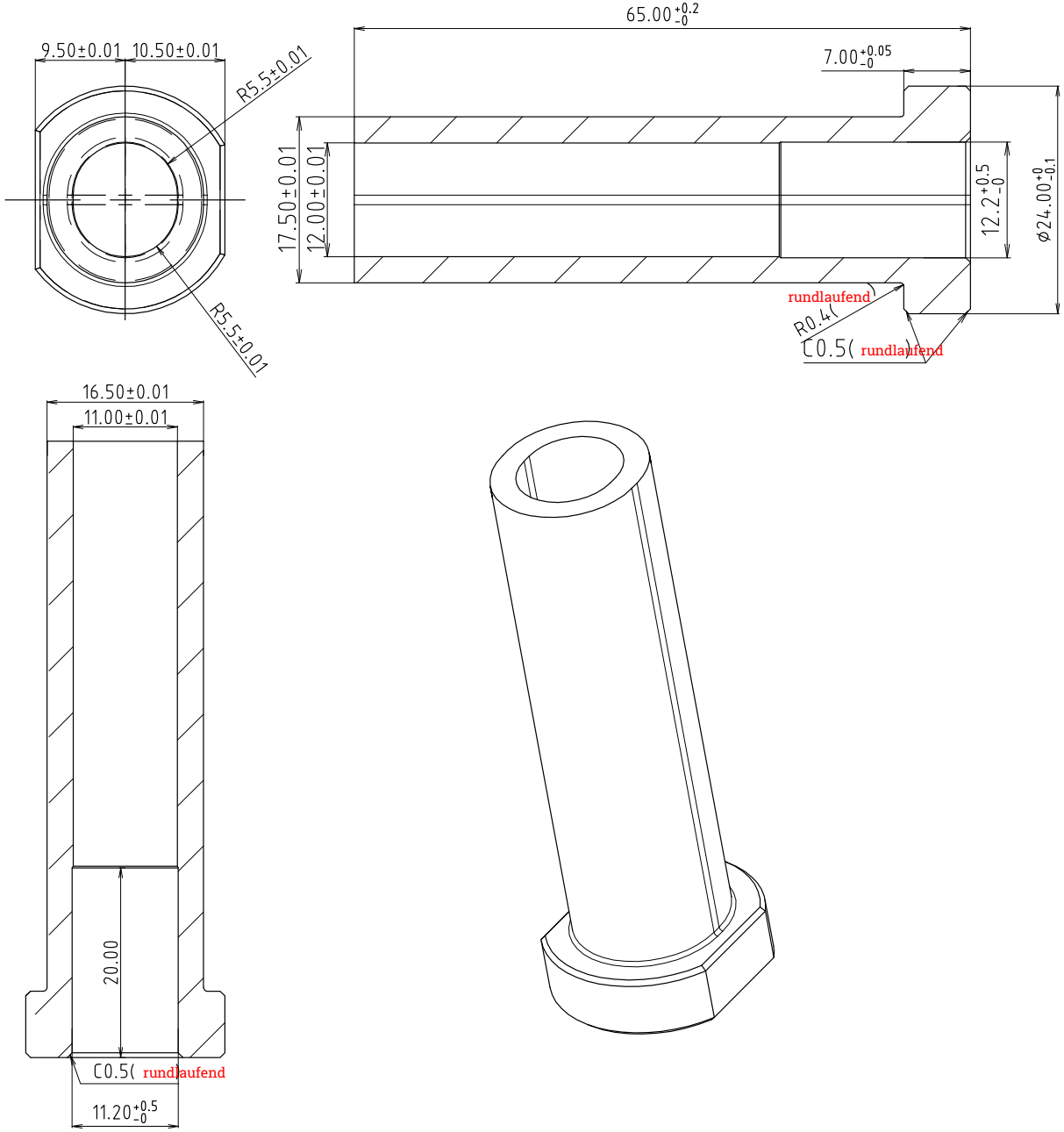
9.50±0.01
10.50±0.01
R5.5±0.01
R5.5±0.01
65.00 +0.2 -0
7.00 +0.05 -0
17.50±0.01
12.00±0.01
12.2 +0.5 -0
ø24.00 +0 -0.1
R0.4(rundlaufend)
C0.5(rundlaufend)
16.50±0.01
11.00±0.01
20.00
C0.5(rundlaufend)
11.20 +0.5 -0