Schema **TR03105_Part_3_3.xsd**

schema location:	**D:\projects\BSI\ConformityAssessment\main\doc\XML\schema\TR03105_Part_3_3.xsd**
attribute form default:	**unqualified**
element form default:	**qualified**
targetNamespace:	**http://bsi.bund.de/TR03105**

Elements
TR_03105_PART_3_3

schema location:	**D:\projects\BSI\ConformityAssessment\main\doc\XML\schema\TR03105Schema.xsd**
attribute form default:	**unqualified**
element form default:	**qualified**
targetNamespace:	**http://bsi.bund.de/TR03105**

Elements	Groups	Complex types	Simple types	Attr. groups
Certificates	**FormattedContentGroup**	**ActionStep**	**LinkIDType**	**NonTextBlockAttributes**
Enumeration	**FormattedTextGroup**	**APDUCommand**		
Heading		**APDUResult**		
Image		**Certificate**		
Link		**Certificates**		
List		**Command**		
Paragraph		**Document**		
Profiles		**FormattedContent**		
References		**FormattedText**		
RoutineCall		**Hypertext**		
Routines		**KeyValueType**		
Table		**Link**		
TestCase		**LinkData**		
TestLayer		**Profile**		
TestUnit		**Profiles**		
		Reference		
		References		
		Result		
		Routine		
		RoutineCall		
		Routines		
		TestCase		
		TestHierarchy		
		TestHierarchyReference		
		TestLayer		
		TestUnit		

element **TR_03105_PART_3_3**

diagram	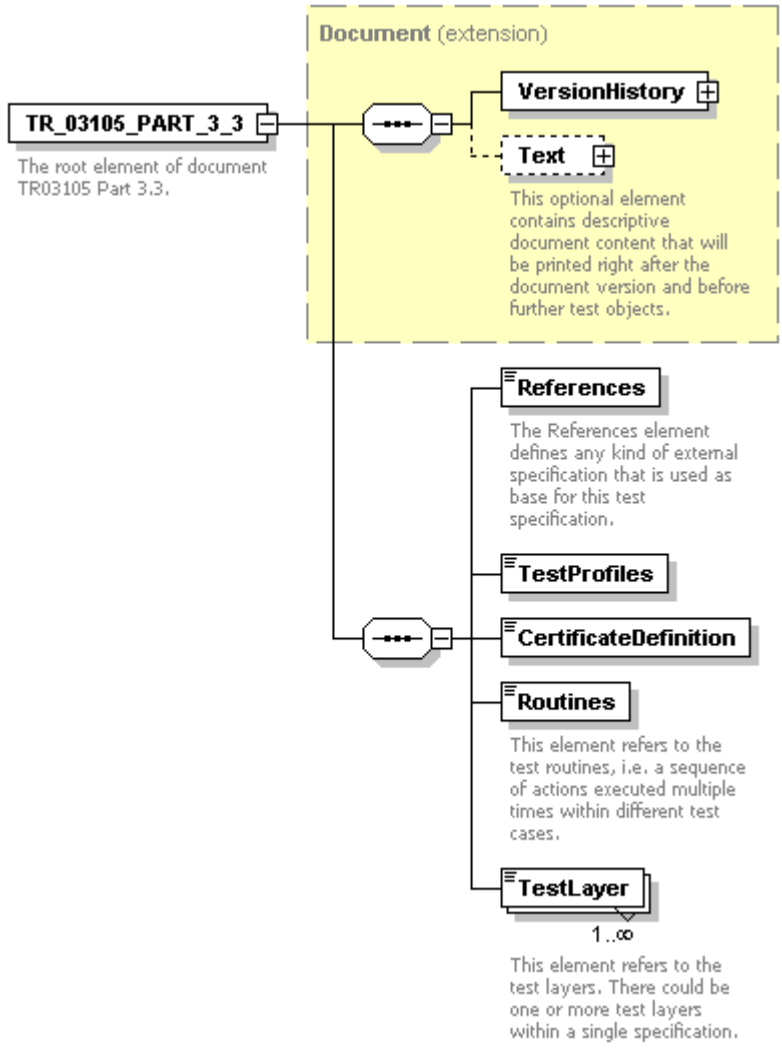
namespace	http://bsi.bund.de/TR03105
type	extension of **Document**
properties	content complex
children	**VersionHistory** **Text** **References** **TestProfiles** **CertificateDefinition** **Routines** **TestLayer**
annotation	documentation The root element of document TR03105 Part 3.3.

source	<xs:element name="TR_03105_PART_3_3"> <xs:annotation> <xs:documentation>The root element of document TR03105 Part 3.3.</xs:documentation> </xs:annotation> <xs:complexType> <xs:complexContent> <xs:extension base="Document"> <xs:sequence> <xs:element name="References" type="TestHierarchyReference"> <xs:annotation> <xs:documentation>The References element defines any kind of external specification that is used as base for this test specification.</xs:documentation> </xs:annotation> </xs:element> <xs:element name="TestProfiles" type="TestHierarchyReference"/> <xs:element name="CertificateDefinition" type="TestHierarchyReference"/> <xs:element name="Routines" type="TestHierarchyReference"> <xs:annotation> <xs:documentation>This element refers to the test routines, i.e. a sequence of actions executed multiple times within different test cases.</xs:documentation> </xs:annotation> </xs:element> <xs:element name="TestLayer" type="TestHierarchyReference" maxOccurs="unbounded"> <xs:annotation> <xs:documentation>This element refers to the test layers. There could be one or more test layers within a single specification.</xs:documentation> </xs:annotation> </xs:element> </xs:sequence> </xs:extension> </xs:complexContent> </xs:complexType> </xs:element>

element **TR_03105_PART_3_3/References**

diagram	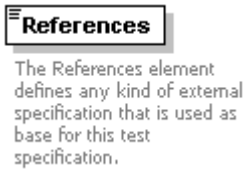
namespace	http://bsi.bund.de/TR03105
type	**TestHierarchyReference**
properties	isRef 0 content complex
annotation	documentation The References element defines any kind of external specification that is used as base for this test specification.
source	<xs:element name="References" type="TestHierarchyReference">\ <xs:annotation> <xs:documentation>The References element defines any kind of external specification that is used as base for this test specification.</xs:documentation> </xs:annotation>

	</xs:element>

element **TR_03105_PART_3_3/TestProfiles**

diagram	TestProfiles
namespace	http://bsi.bund.de/TR03105
type	TestHierarchyReference
properties	isRef 0 content complex
source	<xs:element name="TestProfiles" type="TestHierarchyReference"/>

element **TR_03105_PART_3_3/CertificateDefinition**

diagram	CertificateDefinition
namespace	http://bsi.bund.de/TR03105
type	TestHierarchyReference
properties	isRef 0 content complex
source	<xs:element name="CertificateDefinition" type="TestHierarchyReference"/>

element **TR_03105_PART_3_3/Routines**

diagram	Routines This element refers to the test routines, i.e. a sequence of actions executed multiple times within different test cases.
namespace	http://bsi.bund.de/TR03105
type	TestHierarchyReference
properties	isRef 0 content complex
annotation	documentation This element refers to the test routines, i.e. a sequence of actions executed multiple times within different test cases.
source	<xs:element name="Routines" type="TestHierarchyReference"> <xs:annotation> <xs:documentation>This element refers to the test routines, i.e. a sequence of actions executed multiple times within different test cases.</xs:documentation> </xs:annotation> </xs:element>

element **TR_03105_PART_3_3/TestLayer**

diagram	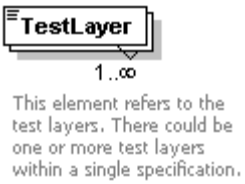
namespace	http://bsi.bund.de/TR03105
type	**TestHierarchyReference**
properties	isRef 0 minOcc 1 maxOcc unbounded content complex
annotation	documentation This element refers to the test layers. There could be one or more test layers within a single specification.
source	<xs:element name="TestLayer" type="TestHierarchyReference" maxOccurs="unbounded"> <xs:annotation> <xs:documentation>This element refers to the test layers. There could be one or more test layers within a single specification.</xs:documentation> </xs:annotation> </xs:element>

element **Certificates**

diagram	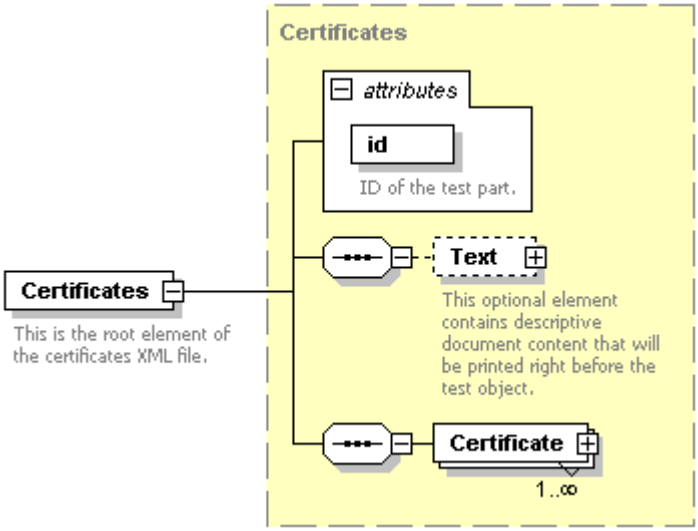
namespace	http://bsi.bund.de/TR03105
type	**Certificates**
properties	content complex
children	**Text** **Certificate**
attributes	Name: id; Type: **LinkIDType**; Use: required; Default; Fixed; annotation: documentation: ID of the test part.
annotation	documentation This is the root element of the certificates XML file.
source	<xs:element name="Certificates" type="Certificates">

```
  <xs:annotation>
    <xs:documentation>This is the root element of the certificates XML file.</xs:documentation>
  </xs:annotation>
</xs:element>
```

element **Enumeration**

diagram	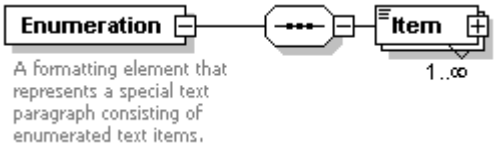
namespace	http://bsi.bund.de/TR03105
properties	content complex
children	**Item**
used by	group **FormattedTextGroup**
annotation	documentation A formatting element that represents a special text paragraph consisting of enumerated text items.

source	`<xs:element name="Enumeration">`
	`  <xs:annotation>`
	`  <xs:documentation>A formatting element that represents a special text paragraph consisting of enumerated text items.</xs:documentation>`
	`  </xs:annotation>`
	`  <xs:complexType>`
	`  <xs:sequence>`
	`  <xs:element name="Item" type="Hypertext" maxOccurs="unbounded"/>`
	`  </xs:sequence>`
	`  </xs:complexType>`
	`</xs:element>`

element **Enumeration/Item**

diagram	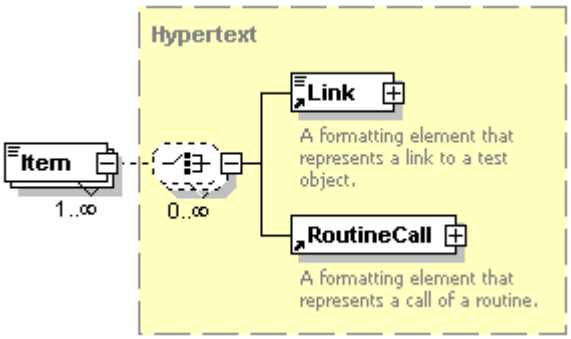
namespace	http://bsi.bund.de/TR03105
type	**Hypertext**
properties	isRef 0 minOcc 1 maxOcc unbounded content complex mixed true

children	**Link** **RoutineCall**
source	<xs:element name="Item" type="Hypertext" maxOccurs="unbounded"/>

element **Heading**

diagram	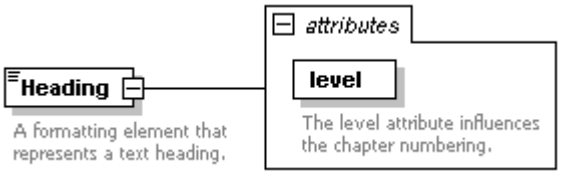
namespace	http://bsi.bund.de/TR03105
type	extension of **xs:string**
properties	content complex
used by	group **FormattedTextGroup**
attributes	Name: level; Type: **xs:string**; Use: required; Default; Fixed; annotation: documentation: The level attribute influe
annotation	documentation A formatting element that represents a text heading.
source	<xs:element name="Heading"> <xs:annotation> <xs:documentation>A formatting element that represents a text heading.</xs:documentation> </xs:annotation> <xs:complexType> <xs:simpleContent> <xs:extension base="xs:string"> <xs:attribute name="level" type="xs:string" use="required"> <xs:annotation> <xs:documentation>The level attribute influences the chapter numbering.</xs:documentation> </xs:annotation> </xs:attribute> </xs:extension> </xs:simpleContent> </xs:complexType> </xs:element>

attribute **Heading/@level**

type	**xs:string**
properties	isRef 0 use required
annotation	documentation The level attribute influences the chapter numbering.
source	<xs:attribute name="level" type="xs:string" use="required">\ <xs:annotation> <xs:documentation>The level attribute influences the chapter numbering.</xs:documentation> </xs:annotation> </xs:attribute>

element **Image**

diagram

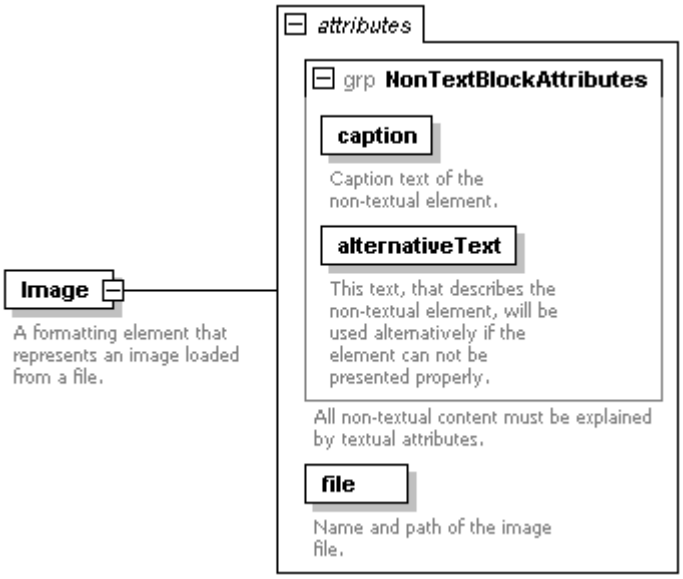

namespace	http://bsi.bund.de/TR03105
properties	content complex
used by	group **FormattedContentGroup**

attributes

Name	Type	Use	Default	Fixed	annotation
caption	**xs:string**	required			documentation Caption text of the non-
alternativeText	**xs:string**	required			documentation This text, that describes
file	**xs:string**	required			documentation Name and path of the i

annotation

documentation
A formatting element that represents an image loaded from a file.

source

```
<xs:element name="Image">
  <xs:annotation>
    <xs:documentation>A formatting element that represents an image loaded from a
file.</xs:documentation>
  </xs:annotation>
  <xs:complexType>
    <xs:attributeGroup ref="NonTextBlockAttributes"/>
    <xs:attribute name="file" type="xs:string" use="required">
      <xs:annotation>
        <xs:documentation>Name and path of the image file.</xs:documentation>
      </xs:annotation>
    </xs:attribute>
  </xs:complexType>
</xs:element>
```

attribute **Image/@file**

type	**xs:string**
properties	isRef 0 use required
annotation	documentation

	Name and path of the image file.
source	<xs:attribute name="file" type="xs:string" use="required"> <xs:annotation> <xs:documentation>Name and path of the image file.</xs:documentation> </xs:annotation> </xs:attribute>

element **Link**

diagram	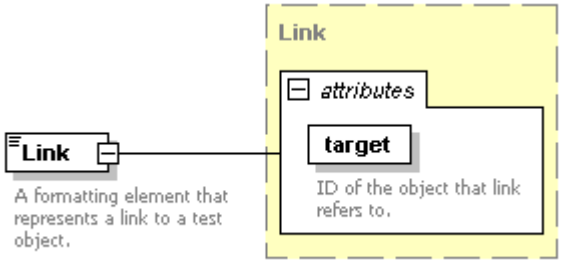
namespace	http://bsi.bund.de/TR03105
type	**Link**
properties	content complex mixed true
used by	complexType **Hypertext**
attributes	Name: target; Type: **LinkIDType**; Use: required; Default; Fixed; annotation: documentation: ID of the object that link
annotation	documentation A formatting element that represents a link to a test object.
source	<xs:element name="Link" type="Link"> <xs:annotation> <xs:documentation>A formatting element that represents a link to a test object.</xs:documentation> </xs:annotation> </xs:element>

element **List**

diagram	
namespace	http://bsi.bund.de/TR03105
properties	content complex
children	**Item**
used by	group **FormattedTextGroup**
annotation	documentation A formatting element that represents a special text paragraph consisting of listed text items.
source	<xs:element name="List">>

```
  <xs:annotation>
    <xs:documentation>A formatting element that represents a special text paragraph consisting of listed text items.</xs:documentation>
  </xs:annotation>
  <xs:complexType>
    <xs:sequence>
      <xs:element name="Item" type="Hypertext" maxOccurs="unbounded"/>
    </xs:sequence>
  </xs:complexType>
</xs:element>
```

element **List/Item**

diagram	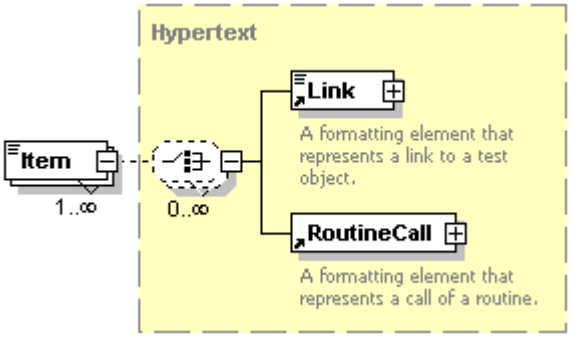
namespace	http://bsi.bund.de/TR03105
type	**Hypertext**
properties	isRef 0 minOcc 1 maxOcc unbounded content complex mixed true
children	**Link** **RoutineCall**
source	<xs:element name="Item" type="Hypertext" maxOccurs="unbounded"/>

element **Paragraph**

diagram	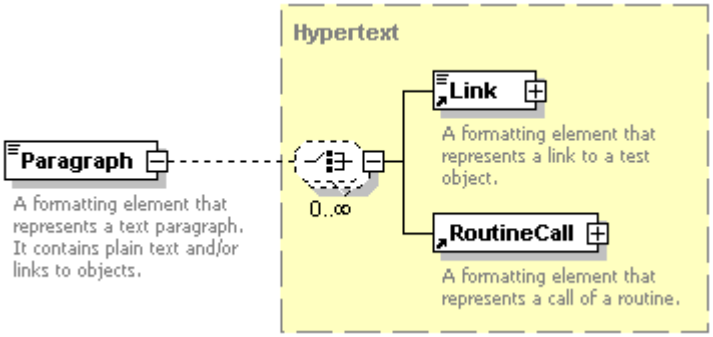
namespace	http://bsi.bund.de/TR03105
type	**Hypertext**
properties	content complex

	mixed true
children	**Link** **RoutineCall**
used by	group **FormattedTextGroup**
annotation	documentation A formatting element that represents a text paragraph. It contains plain text and/or links to objects.
source	<xs:element name="Paragraph" type="Hypertext"> <xs:annotation> <xs:documentation>A formatting element that represents a text paragraph. It contains plain text and/or links to objects.</xs:documentation> </xs:annotation> </xs:element>

element **Profiles**

diagram	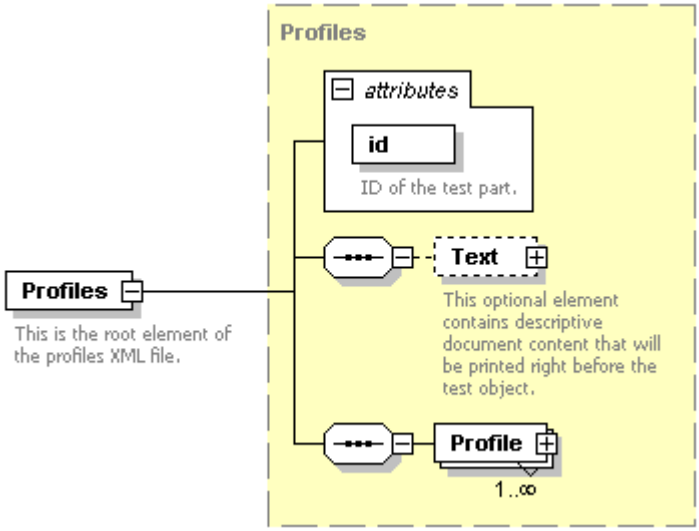
namespace	http://bsi.bund.de/TR03105
type	**Profiles**
properties	content complex
children	**Text** **Profile**
attributes	Name: id Type: **LinkIDType** Use: required Default: Fixed: annotation: documentation ID of the test part.
annotation	documentation This is the root element of the profiles XML file.
source	<xs:element name="Profiles" type="Profiles"> <xs:annotation> <xs:documentation>This is the root element of the profiles XML file.</xs:documentation> </xs:annotation> </xs:element>

element **References**

diagram	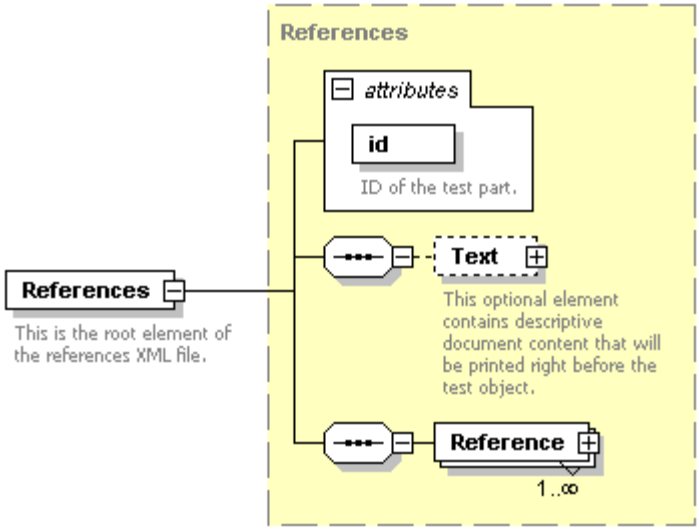
namespace	http://bsi.bund.de/TR03105
type	**References**
properties	content complex
children	**Text** **Reference**
attributes	Name: id Type: **LinkIDType** Use: required Default: Fixed: annotation: documentation: ID of the test part.
annotation	documentation This is the root element of the references XML file.

source	`<xs:element name="References" type="References">`
	`  <xs:annotation>`
	`  <xs:documentation>This is the root element of the references XML file.</xs:documentation>`
	`  </xs:annotation>`
	`</xs:element>`

element **RoutineCall**

diagram	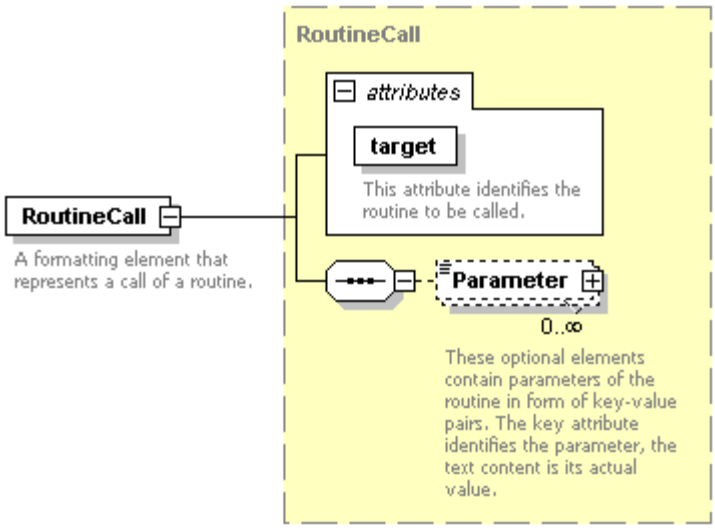
namespace	http://bsi.bund.de/TR03105
type	**RoutineCall**
properties	content complex
children	**Parameter**
used by	complexType **Hypertext**
attributes	Name: target Type: **LinkIDType** Use: required Default Fixed annotation documentation This attribute identifies
annotation	documentation A formatting element that represents a call of a routine.

source	`<xs:element name="RoutineCall" type="RoutineCall">`
	`  <xs:annotation>`
	`  <xs:documentation>A formatting element that represents a call of a routine.</xs:documentation>`
	`  </xs:annotation>`
	`</xs:element>`

element **Routines**

diagram	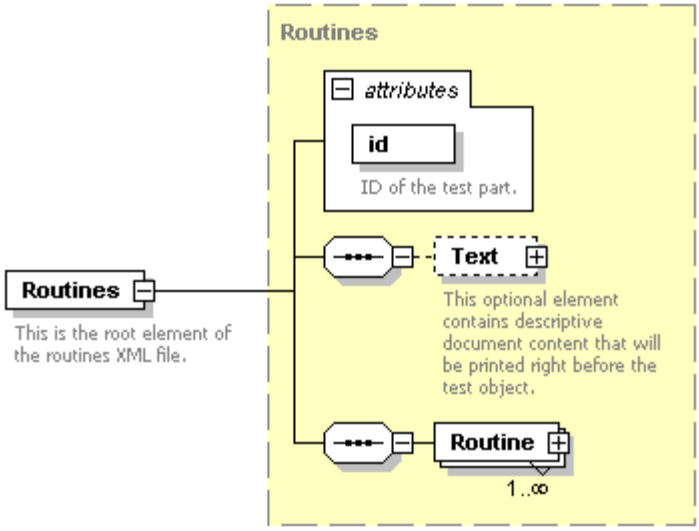
namespace	http://bsi.bund.de/TR03105
type	**Routines**
properties	content complex
children	**Text** **Routine**
attributes	Name: id Type: **LinkIDType** Use: required Default: Fixed: annotation: documentation: ID of the test part.
annotation	documentation This is the root element of the routines XML file.

source	`<xs:element name="Routines" type="Routines">`
	`  <xs:annotation>`
	`  <xs:documentation>This is the root element of the routines XML file.</xs:documentation>`
	`  </xs:annotation>`
	`</xs:element>`

element **Table**

diagram

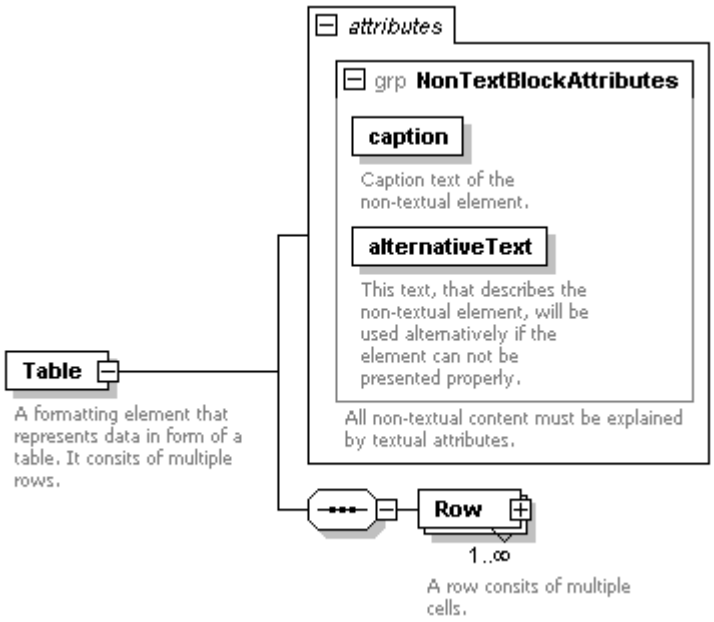

namespace	http://bsi.bund.de/TR03105
properties	content complex
children	**Row**
used by	group **FormattedContentGroup**

attributes

Name	Type	Use	Default	Fixed	annotation
caption	**xs:string**	required			documentation Caption text of the non-
alternativeText	**xs:string**	required			documentation This text, that describes

annotation

documentation
A formatting element that represents data in form of a table. It consits of multiple rows.

source

```
<xs:element name="Table">
  <xs:annotation>
    <xs:documentation>A formatting element that represents data in form of a table. It consits of multiple rows.</xs:documentation>
  </xs:annotation>
  <xs:complexType>
    <xs:sequence>
      <xs:element name="Row" maxOccurs="unbounded">
        <xs:annotation>
          <xs:documentation>A row consits of multiple cells.</xs:documentation>
        </xs:annotation>
        <xs:complexType>
          <xs:sequence>
            <xs:element name="Cell" type="Hypertext" maxOccurs="unbounded">
              <xs:annotation>
                <xs:documentation>A cell contains the table's text content and/or links to test objects.</xs:documentation>
              </xs:annotation>
            </xs:element>
          </xs:sequence>
        </xs:complexType>
```

```
    </xs:element>
  </xs:sequence>
  <xs:attributeGroup ref="NonTextBlockAttributes"/>
 </xs:complexType>
</xs:element>
```

element **Table/Row**

diagram

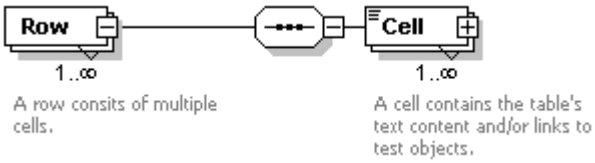

namespace: http://bsi.bund.de/TR03105

properties

isRef	0
minOcc	1
maxOcc	unbounded
content	complex

children: **Cell**

annotation

documentation
A row consits of multiple cells.

source

```
<xs:element name="Row" maxOccurs="unbounded">
 <xs:annotation>
  <xs:documentation>A row consits of multiple cells.</xs:documentation>
 </xs:annotation>
 <xs:complexType>
  <xs:sequence>
   <xs:element name="Cell" type="Hypertext" maxOccurs="unbounded">
    <xs:annotation>
     <xs:documentation>A cell contains the table's text content and/or links to test
objects.</xs:documentation>
    </xs:annotation>
   </xs:element>
  </xs:sequence>
 </xs:complexType>
</xs:element>
```

element **Table/Row/Cell**

diagram

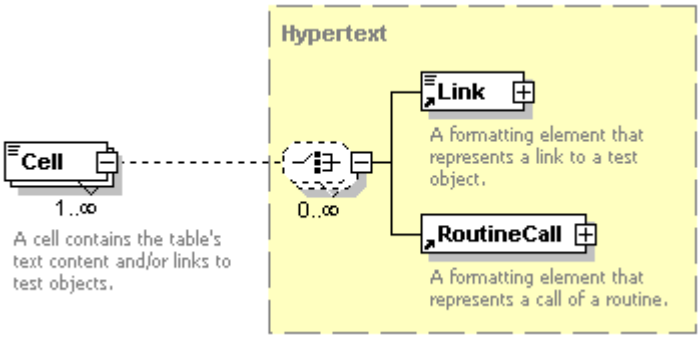

namespace: http://bsi.bund.de/TR03105

type	**Hypertext**
properties	isRef 0 minOcc 1 maxOcc unbounded content complex mixed true
children	**Link** **RoutineCall**
annotation	documentation A cell contains the table's text content and/or links to test objects.
source	<xs:element name="Cell" type="Hypertext" maxOccurs="unbounded"> <xs:annotation> <xs:documentation>A cell contains the table's text content and/or links to test objects.</xs:documentation> </xs:annotation> </xs:element>

element **TestCase**

diagram

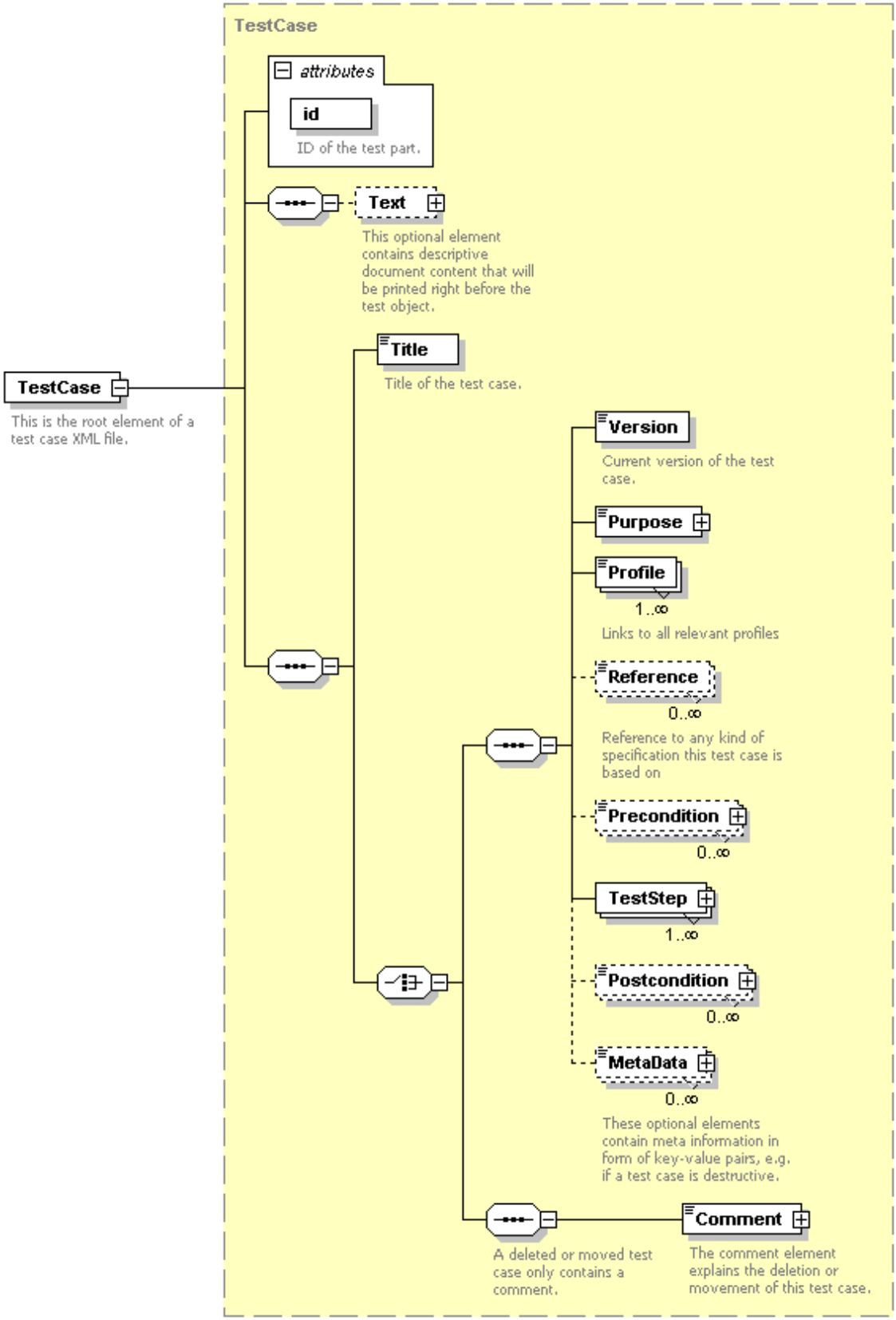

namespace	http://bsi.bund.de/TR03105
type	**TestCase**
properties	content complex
children	**Text** **Title** **Version** **Purpose** **Profile** **Reference** **Precondition** **TestStep** **Postcondition** **MetaData** **Comment**
attributes	Name: id; Type: **LinkIDType**; Use: required; Default; Fixed; annotation: documentation: ID of the test part.
annotation	documentation: This is the root element of a test case XML file.

source	`<xs:element name="TestCase" type="TestCase">`
	`  <xs:annotation>`
	`  <xs:documentation>This is the root element of a test case XML file.</xs:documentation>`
	`  </xs:annotation>`
	`</xs:element>`

element **TestLayer**

diagram	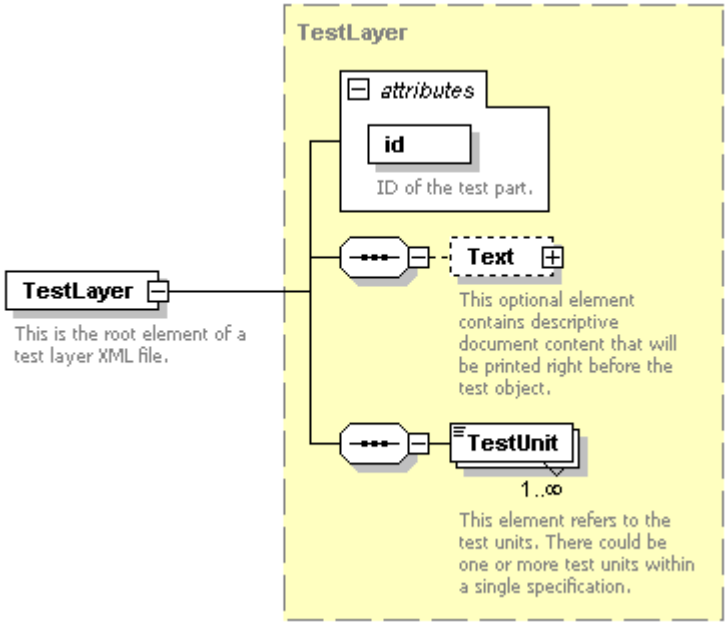
namespace	http://bsi.bund.de/TR03105
type	**TestLayer**
properties	content complex
children	**Text** **TestUnit**
attributes	Name: id; Type: **LinkIDType**; Use: required; Default; Fixed; annotation: documentation: ID of the test part.
annotation	documentation: This is the root element of a test layer XML file.

source	`<xs:element name="TestLayer" type="TestLayer">`
	`  <xs:annotation>`
	`  <xs:documentation>This is the root element of a test layer XML file.</xs:documentation>`
	`  </xs:annotation>`

	</xs:element>

element **TestUnit**

diagram	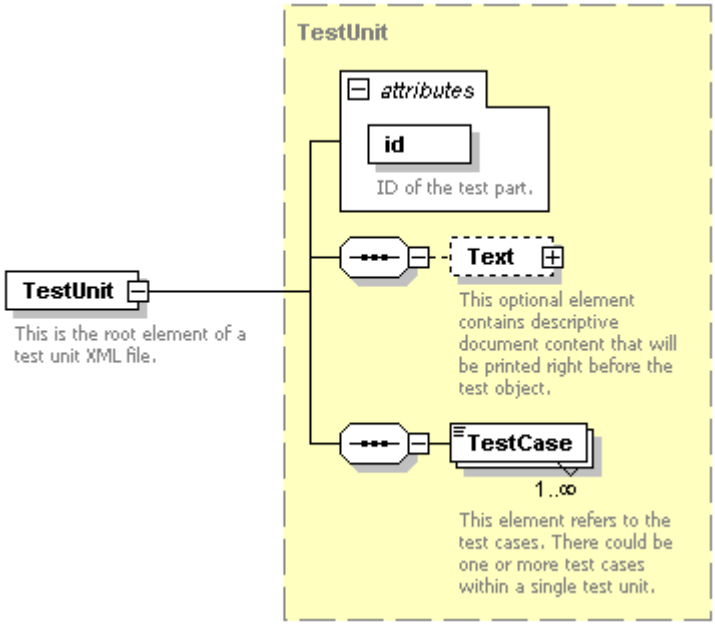
namespace	http://bsi.bund.de/TR03105
type	**TestUnit**
properties	content complex
children	**Text** **TestCase**
attributes	Name: id; Type: **LinkIDType**; Use: required; Default; Fixed; annotation: documentation: ID of the test part.
annotation	documentation This is the root element of a test unit XML file.
source	<xs:element name="TestUnit" type="TestUnit"> <xs:annotation> <xs:documentation>This is the root element of a test unit XML file.</xs:documentation> </xs:annotation> </xs:element>

group **FormattedContentGroup**

diagram

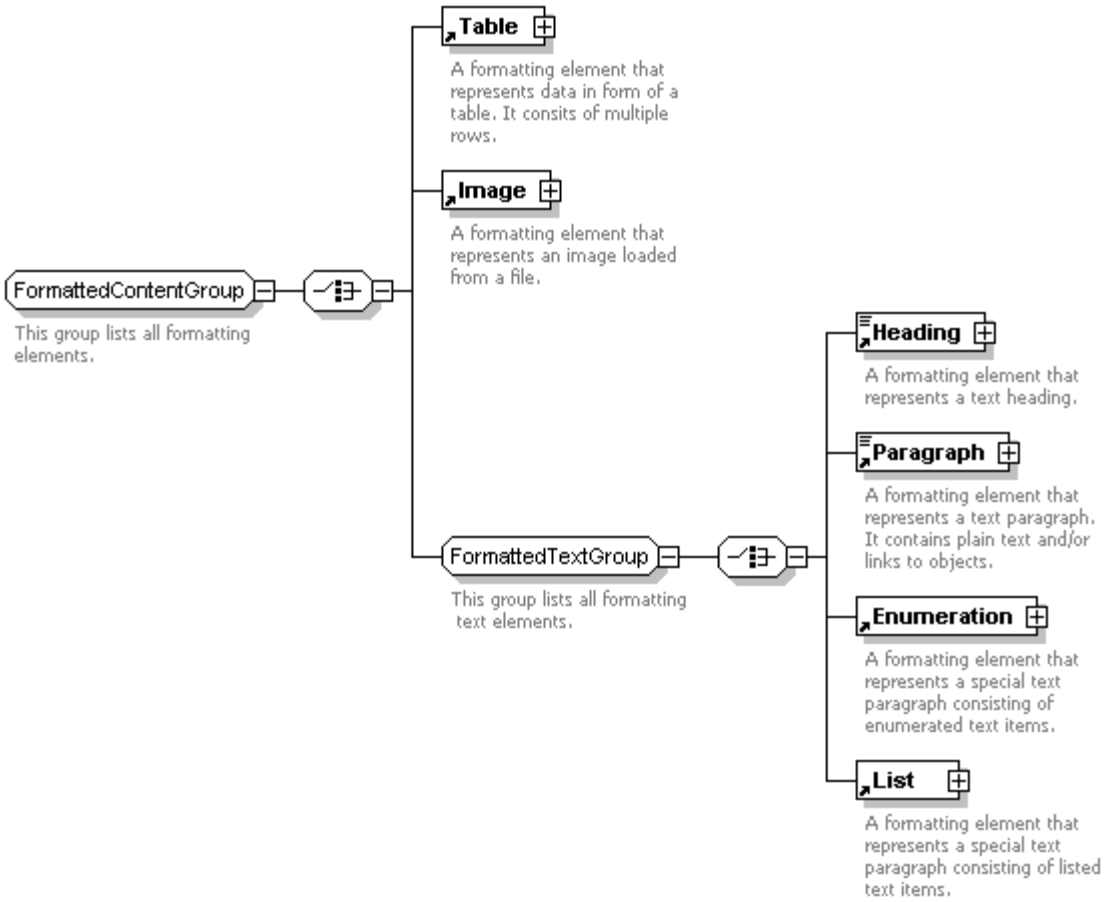

namespace	http://bsi.bund.de/TR03105
children	**Table** **Image** **Heading** **Paragraph** **Enumeration** **List**
used by	complexType **FormattedContent**
annotation	documentation This group lists all formatting elements.

source

```
<xs:group name="FormattedContentGroup">
  <xs:annotation>
    <xs:documentation>This group lists all formatting elements.</xs:documentation>
  </xs:annotation>
  <xs:choice>
    <xs:element ref="Table"/>
    <xs:element ref="Image"/>
    <xs:group ref="FormattedTextGroup"/>
  </xs:choice>
</xs:group>
```

group **FormattedTextGroup**

diagram	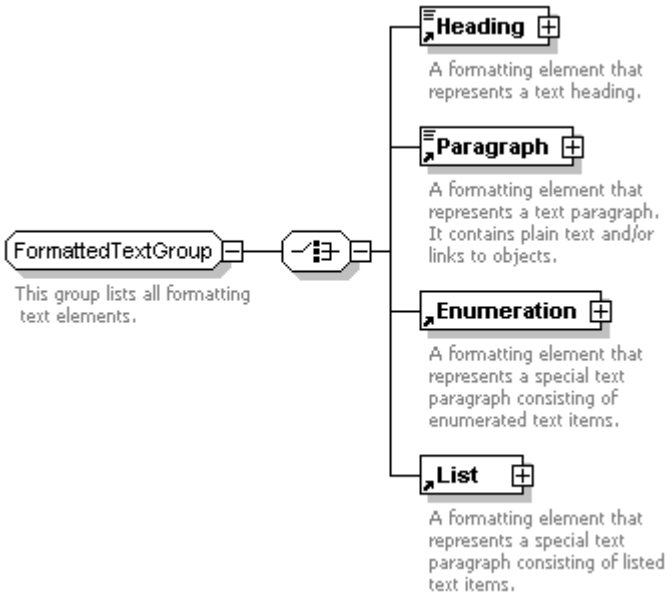
namespace	http://bsi.bund.de/TR03105
children	**Heading** **Paragraph** **Enumeration** **List**
used by	complexType **FormattedText** group **FormattedContentGroup**
annotation	documentation This group lists all formatting text elements.

source	`<xs:group name="FormattedTextGroup">`
	`<xs:annotation>`
	`<xs:documentation>`This group lists all formatting text elements.`</xs:documentation>`
	`</xs:annotation>`
	`<xs:choice>`
	`<xs:element ref="Heading"/>`
	`<xs:element ref="Paragraph"/>`
	`<xs:element ref="Enumeration"/>`
	`<xs:element ref="List"/>`
	`</xs:choice>`
	`</xs:group>`

complexType **ActionStep**

diagram

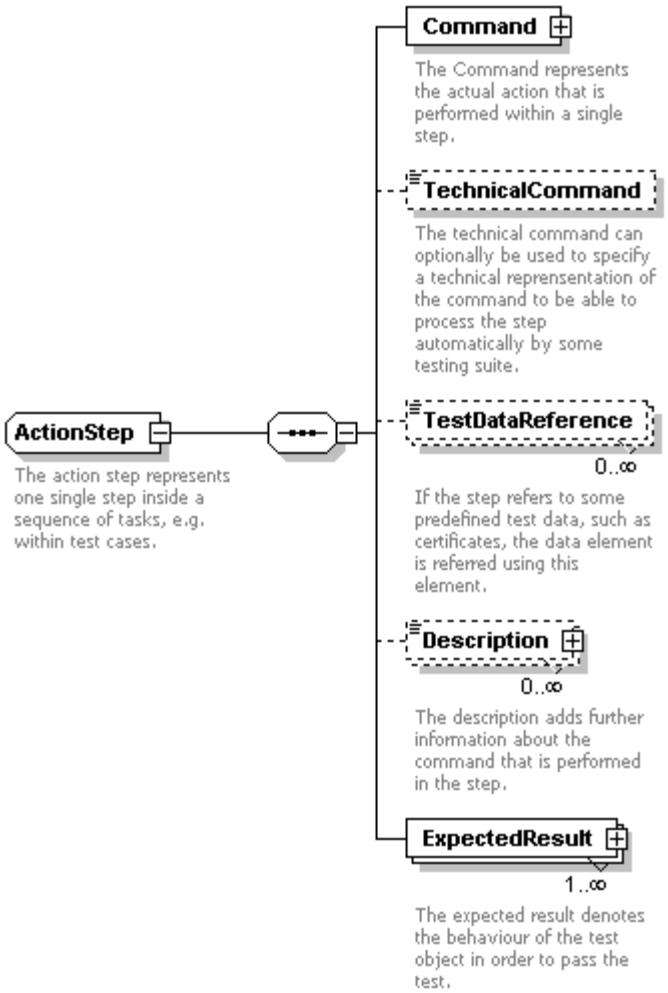

namespace	http://bsi.bund.de/TR03105
children	**Command** **TechnicalCommand** **TestDataReference** **Description** **ExpectedResult**
used by	elements **Routine/RoutineStep** **TestCase/TestStep**
annotation	documentation The action step represents one single step inside a sequence of tasks, e.g. within test cases.

source

```
<xs:complexType name="ActionStep">
  <xs:annotation>
    <xs:documentation>The action step represents one single step inside a sequence of tasks, e.g.
within test cases.</xs:documentation>
  </xs:annotation>
  <xs:sequence>
    <xs:element name="Command" type="Command">
      <xs:annotation>
        <xs:documentation>The Command represents the actual action that is performed within a
single step.</xs:documentation>
      </xs:annotation>
    </xs:element>
    <xs:element name="TechnicalCommand" type="xs:string" minOccurs="0">
      <xs:annotation>
        <xs:documentation>The technical command can optionally be used to specify a technical
```

	reprensentation of the command to be able to process the step automatically by some testing suite.</xs:documentation> </xs:annotation> </xs:element> <xs:element name="TestDataReference" type="LinkIDType" minOccurs="0" maxOccurs="unbounded"> <xs:annotation> <xs:documentation>If the step refers to some predefined test data, such as certificates, the data element is referred using this element.</xs:documentation> </xs:annotation> </xs:element> <xs:element name="Description" type="Hypertext" minOccurs="0" maxOccurs="unbounded"> <xs:annotation> <xs:documentation>The description adds further information about the command that is performed in the step.</xs:documentation> </xs:annotation> </xs:element> <xs:element name="ExpectedResult" type="Result" maxOccurs="unbounded"> <xs:annotation> <xs:documentation>The expected result denotes the behaviour of the test object in order to pass the test.</xs:documentation> </xs:annotation> </xs:element> </xs:sequence> </xs:complexType>

element **ActionStep/Command**

diagram	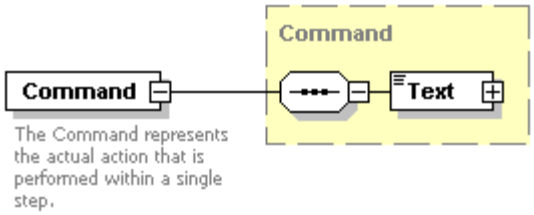
namespace	http://bsi.bund.de/TR03105
type	**Command**
properties	isRef 0 content complex
children	**Text**
annotation	documentation The Command represents the actual action that is performed within a single step.
source	<xs:element name="Command" type="Command"> <xs:annotation> <xs:documentation>The Command represents the actual action that is performed within a single step.</xs:documentation> </xs:annotation> </xs:element>

element **ActionStep/TechnicalCommand**

diagram	**TechnicalCommand** The technical command can optionally be used to specify a technical reprensentation of the command to be able to process the step automatically by some testing suite.
namespace	http://bsi.bund.de/TR03105
type	**xs:string**
properties	isRef 0 minOcc 0 maxOcc 1 content simple
annotation	documentation The technical command can optionally be used to specify a technical reprensentation of the command to be able to process the step automatically by some testing suite.
source	<xs:element name="TechnicalCommand" type="xs:string" minOccurs="0"> <xs:annotation> <xs:documentation>The technical command can optionally be used to specify a technical reprensentation of the command to be able to process the step automatically by some testing suite.</xs:documentation> </xs:annotation> </xs:element>

element **ActionStep/TestDataReference**

diagram	**TestDataReference** 0..∞ If the step refers to some predefined test data, such as certificates, the data element is referred using this element.
namespace	http://bsi.bund.de/TR03105
type	**LinkIDType**
properties	isRef 0 minOcc 0 maxOcc unbounded content simple
annotation	documentation If the step refers to some predefined test data, such as certificates, the data element is referred using this element.
source	<xs:element name="TestDataReference" type="LinkIDType" minOccurs="0" maxOccurs="unbounded">\ <xs:annotation> <xs:documentation>If the step refers to some predefined test data, such as certificates, the data element is referred using this element.</xs:documentation> </xs:annotation> </xs:element>

element **ActionStep/Description**

diagram	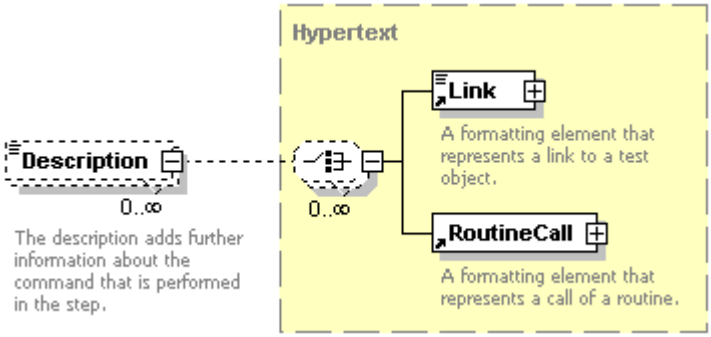
namespace	http://bsi.bund.de/TR03105
type	**Hypertext**
properties	isRef 0 minOcc 0 maxOcc unbounded content complex mixed true
children	**Link** **RoutineCall**
annotation	documentation The description adds further information about the command that is performed in the step.
source	<xs:element name="Description" type="Hypertext" minOccurs="0" maxOccurs="unbounded"> <xs:annotation> <xs:documentation>The description adds further information about the command that is performed in the step.</xs:documentation> </xs:annotation> </xs:element>

element **ActionStep/ExpectedResult**

diagram	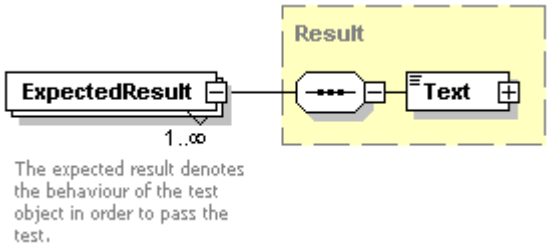
namespace	http://bsi.bund.de/TR03105
type	**Result**
properties	isRef 0 minOcc 1 maxOcc unbounded content complex
children	**Text**
annotation	documentation The expected result denotes the behaviour of the test object in order to pass the test.
source	<xs:element name="ExpectedResult" type="Result" maxOccurs="unbounded">> <xs:annotation> <xs:documentation>The expected result denotes the behaviour of the test object in order to pass the test.</xs:documentation>

	<xs:annotation> </xs:annotation> </xs:element>

complexType **APDUCommand**

diagram	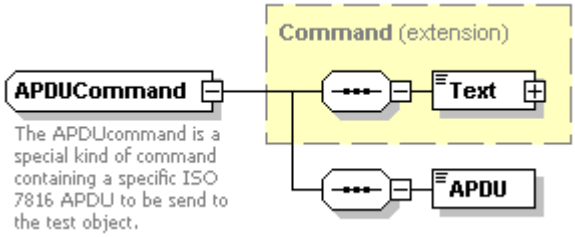
namespace	http://bsi.bund.de/TR03105
type	extension of **Command**
properties	base Command
children	**Text** **APDU**
annotation	documentation The APDUcommand is a special kind of command containing a specific ISO 7816 APDU to be send to the test object.
source	<xs:complexType name="APDUCommand"> <xs:annotation> <xs:documentation>The APDUcommand is a special kind of command containing a specific ISO 7816 APDU to be send to the test object.</xs:documentation> </xs:annotation> <xs:complexContent> <xs:extension base="Command"> <xs:sequence> <xs:element name="APDU" type="xs:string"/> </xs:sequence> </xs:extension> </xs:complexContent> </xs:complexType>

element **APDUCommand/APDU**

diagram	
namespace	http://bsi.bund.de/TR03105
type	**xs:string**
properties	isRef 0 content simple
source	<xs:element name="APDU" type="xs:string"/>

complexType **APDUResult**

diagram	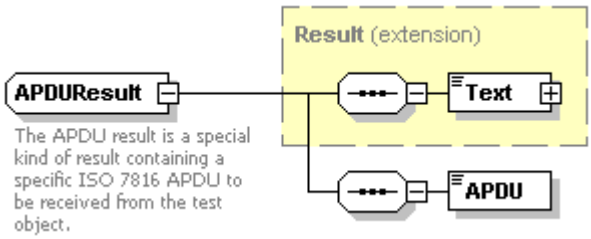
namespace	http://bsi.bund.de/TR03105
type	extension of **Result**
properties	base Result
children	**Text** **APDU**
annotation	documentation The APDU result is a special kind of result containing a specific ISO 7816 APDU to be received from the test object.

source	`<xs:complexType name="APDUResult">`
	`  <xs:annotation>`
	`  <xs:documentation>`The APDU result is a special kind of result containing a specific ISO 7816 APDU to be received from the test object.`</xs:documentation>`
	`  </xs:annotation>`
	`  <xs:complexContent>`
	`  <xs:extension base="Result">`
	`  <xs:sequence>`
	`  <xs:element name="APDU" type="xs:string"/>`
	`  </xs:sequence>`
	`  </xs:extension>`
	`  </xs:complexContent>`
	`</xs:complexType>`

element **APDUResult/APDU**

diagram	
namespace	http://bsi.bund.de/TR03105
type	**xs:string**
properties	isRef 0 content simple
source	`<xs:element name="APDU" type="xs:string"/>`

complexType **Certificate**

diagram

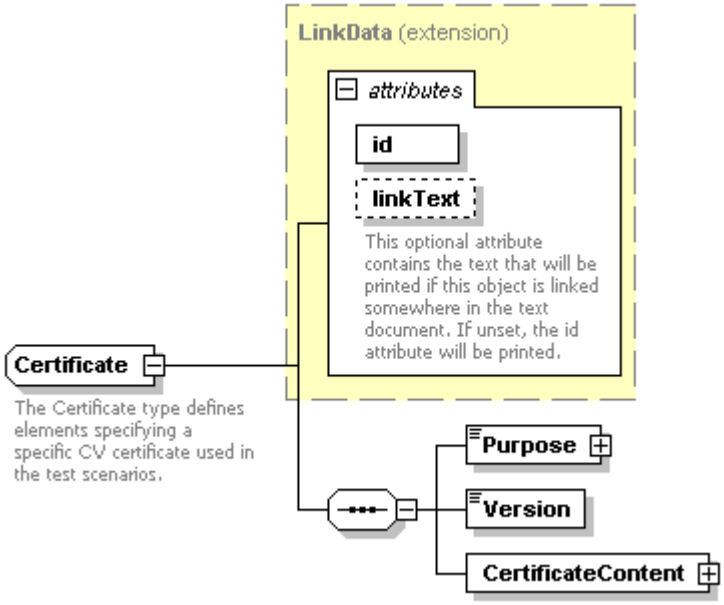

namespace	http://bsi.bund.de/TR03105
type	extension of **LinkData**
properties	base LinkData
children	**Purpose** **Version** **CertificateContent**
used by	element **Certificates/Certificate**

attributes

Name	Type	Use	Default	Fixed	annotation
id	**LinkIDType**	required			
linkText	**xs:string**	optional			documentation This optional attribute c attribute will be printed.

annotation

documentation
The Certificate type defines elements specifying a specific CV certificate used in the test scenarios.

source

```
<xs:complexType name="Certificate">
  <xs:annotation>
    <xs:documentation>The Certificate type defines elements specifying a specific CV certificate
used in the test scenarios.</xs:documentation>
  </xs:annotation>
  <xs:complexContent>
    <xs:extension base="LinkData">
      <xs:sequence>
        <xs:element name="Purpose" type="Hypertext"/>
        <xs:element name="Version" type="xs:string"/>
        <xs:element name="CertificateContent">
          <xs:complexType>
            <xs:sequence>
              <xs:choice>
                <xs:sequence>
                  <xs:annotation>
                    <xs:documentation>If the certificate has a (regular) signer, its certificate is linked and
the corresponding elements become optional.</xs:documentation>
                  </xs:annotation>
                  <xs:element name="SignerCertificate" type="LinkIDType"/>
```

```
                <xs:element name="CertificateAuthorityReference" type="xs:string" minOccurs="0"/>
                <xs:element name="SigningKey" type="xs:string" minOccurs="0"/>
              </xs:sequence>
              <xs:sequence>
                <xs:annotation>
                  <xs:documentation>If the certificate has no signer it could link to, all elements must be
given explicitly.</xs:documentation>
                </xs:annotation>
                <xs:element name="CertificateAuthorityReference" type="xs:string"/>
                <xs:element name="SigningKey" type="xs:string"/>
              </xs:sequence>
            </xs:choice>
            <xs:element name="CertificateHolderReference" type="xs:string"/>
            <xs:element name="CertificateHolderAuthorization" type="xs:string"/>
            <xs:element name="CertificateEffectiveDate" type="xs:string"/>
            <xs:element name="CertificateExpirationDate" type="xs:string"/>
            <xs:element name="PublicKey" type="xs:string"/>
            <xs:element name="CertificateExtension" type="xs:string" minOccurs="0"
maxOccurs="unbounded"/>
          </xs:sequence>
        </xs:complexType>
      </xs:element>
    </xs:sequence>
  </xs:extension>
 </xs:complexContent>
</xs:complexType>
```

element **Certificate/Purpose**

diagram	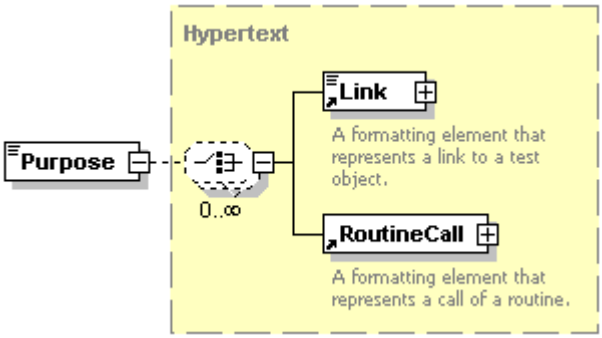
namespace	http://bsi.bund.de/TR03105
type	**Hypertext**
properties	isRef 0 content complex mixed true
children	**Link** **RoutineCall**
source	`<xs:element name="Purpose" type="Hypertext"/>`

element **Certificate/Version**

diagram	Version
namespace	http://bsi.bund.de/TR03105
type	**xs:string**
properties	isRef 0 content simple
source	<xs:element name="Version" type="xs:string"/>

element **Certificate/CertificateContent**

diagram	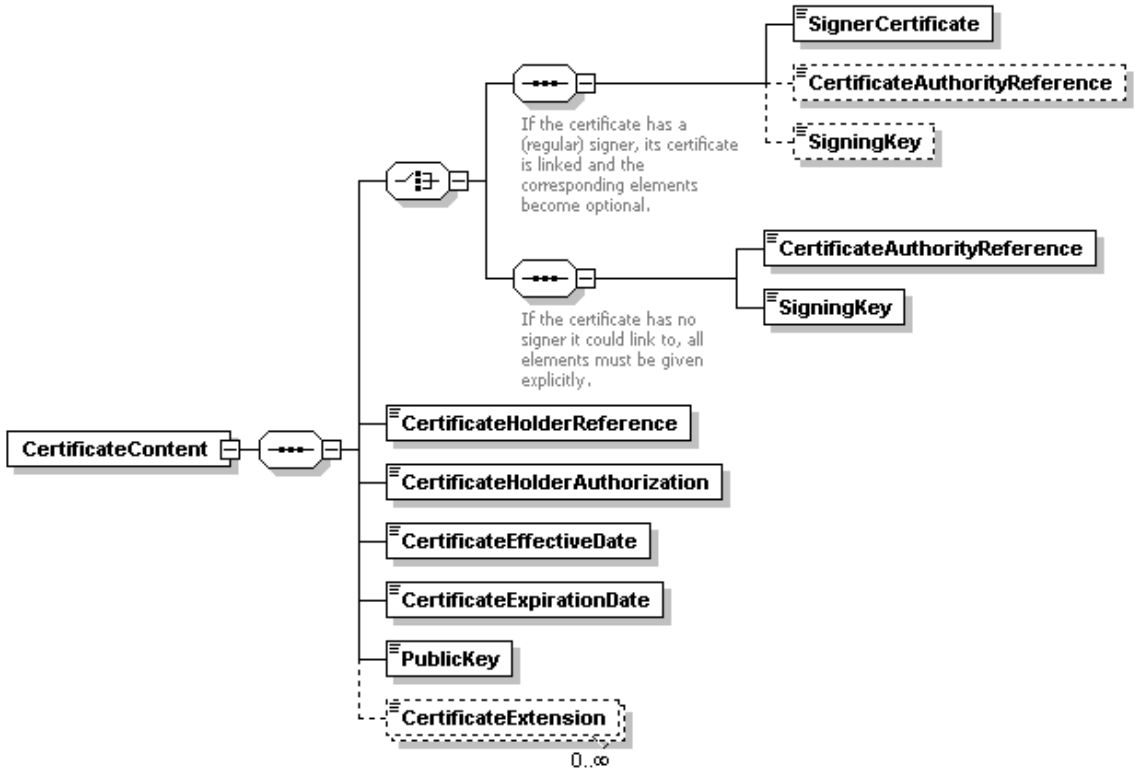
namespace	http://bsi.bund.de/TR03105
properties	isRef 0 content complex
children	SignerCertificate CertificateAuthorityReference SigningKey CertificateAuthorityReference SigningKey CertificateHolderReference CertificateHolderAuthorization CertificateEffectiveDate CertificateExpirationDate PublicKey CertificateExtension
source	<xs:element name="CertificateContent"> <xs:complexType> <xs:sequence> <xs:choice> <xs:sequence> <xs:annotation> <xs:documentation>If the certificate has a (regular) signer, its certificate is linked and the corresponding elements become optional.</xs:documentation> </xs:annotation>

```
        <xs:element name="SignerCertificate" type="LinkIDType"/>
        <xs:element name="CertificateAuthorityReference" type="xs:string" minOccurs="0"/>
        <xs:element name="SigningKey" type="xs:string" minOccurs="0"/>
      </xs:sequence>
      <xs:sequence>
        <xs:annotation>
          <xs:documentation>If the certificate has no signer it could link to, all elements must be
given explicitly.</xs:documentation>
        </xs:annotation>
        <xs:element name="CertificateAuthorityReference" type="xs:string"/>
        <xs:element name="SigningKey" type="xs:string"/>
      </xs:sequence>
    </xs:choice>
    <xs:element name="CertificateHolderReference" type="xs:string"/>
    <xs:element name="CertificateHolderAuthorization" type="xs:string"/>
    <xs:element name="CertificateEffectiveDate" type="xs:string"/>
    <xs:element name="CertificateExpirationDate" type="xs:string"/>
    <xs:element name="PublicKey" type="xs:string"/>
    <xs:element name="CertificateExtension" type="xs:string" minOccurs="0"
maxOccurs="unbounded"/>
  </xs:sequence>
 </xs:complexType>
</xs:element>
```

element **Certificate/CertificateContent/SignerCertificate**

diagram	SignerCertificate
namespace	http://bsi.bund.de/TR03105
type	**LinkIDType**
properties	isRef 0 content simple
source	`<xs:element name="SignerCertificate" type="LinkIDType"/>`

element **Certificate/CertificateContent/CertificateAuthorityReference**

diagram	CertificateAuthorityReference
namespace	http://bsi.bund.de/TR03105
type	**xs:string**
properties	isRef 0 minOcc 0 maxOcc 1 content simple
source	`<xs:element name="CertificateAuthorityReference" type="xs:string" minOccurs="0"/>`

element **Certificate/CertificateContent/SigningKey**

diagram	SigningKey
namespace	http://bsi.bund.de/TR03105
type	**xs:string**
properties	isRef 0 minOcc 0 maxOcc 1 content simple
source	<xs:element name="SigningKey" type="xs:string" minOccurs="0"/>

element **Certificate/CertificateContent/CertificateAuthorityReference**

diagram	CertificateAuthorityReference
namespace	http://bsi.bund.de/TR03105
type	**xs:string**
properties	isRef 0 content simple
source	<xs:element name="CertificateAuthorityReference" type="xs:string"/>

element **Certificate/CertificateContent/SigningKey**

diagram	SigningKey
namespace	http://bsi.bund.de/TR03105
type	**xs:string**
properties	isRef 0 content simple
source	<xs:element name="SigningKey" type="xs:string"/>

element **Certificate/CertificateContent/CertificateHolderReference**

diagram	CertificateHolderReference
namespace	http://bsi.bund.de/TR03105
type	**xs:string**
properties	isRef 0 content simple
source	<xs:element name="CertificateHolderReference" type="xs:string"/>

element **Certificate/CertificateContent/CertificateHolderAuthorization**

diagram	CertificateHolderAuthorization

namespace	http://bsi.bund.de/TR03105
type	**xs:string**
properties	isRef 0 content simple
source	<xs:element name="CertificateHolderAuthorization" type="xs:string"/>

element **Certificate/CertificateContent/CertificateEffectiveDate**

diagram	
namespace	http://bsi.bund.de/TR03105
type	**xs:string**
properties	isRef 0 content simple
source	<xs:element name="CertificateEffectiveDate" type="xs:string"/>

element **Certificate/CertificateContent/CertificateExpirationDate**

diagram	
namespace	http://bsi.bund.de/TR03105
type	**xs:string**
properties	isRef 0 content simple
source	<xs:element name="CertificateExpirationDate" type="xs:string"/>

element **Certificate/CertificateContent/PublicKey**

diagram	
namespace	http://bsi.bund.de/TR03105
type	**xs:string**
properties	isRef 0 content simple
source	<xs:element name="PublicKey" type="xs:string"/>

element **Certificate/CertificateContent/CertificateExtension**

diagram	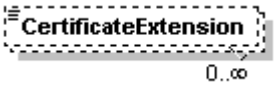
namespace	http://bsi.bund.de/TR03105
type	**xs:string**
properties	isRef 0

	minOcc 0 maxOcc unbounded content simple
source	<xs:element name="CertificateExtension" type="xs:string" minOccurs="0" maxOccurs="unbounded"/>

complexType **Certificates**

diagram	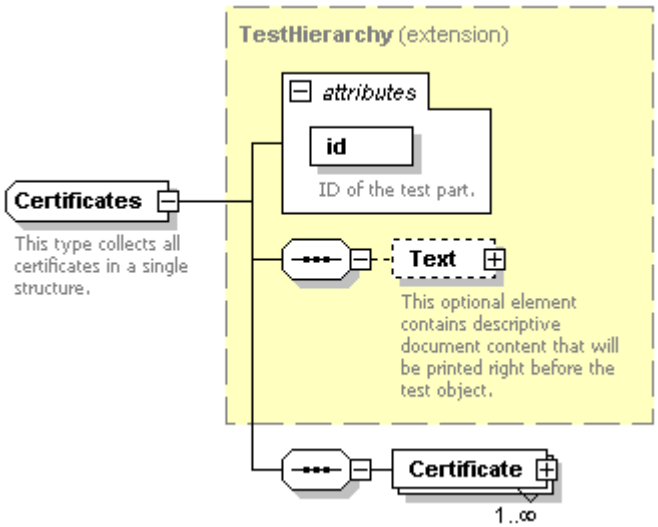
namespace	http://bsi.bund.de/TR03105
type	extension of **TestHierarchy**
properties	base TestHierarchy
children	**Text** **Certificate**
used by	element **Certificates**
attributes	Name: id Type: **LinkIDType** Use: required Default: Fixed: annotation: documentation ID of the test part.
annotation	documentation This type collects all certificates in a single structure.
source	<xs:complexType name="Certificates"> <xs:annotation> <xs:documentation>This type collects all certificates in a single structure.</xs:documentation> </xs:annotation> <xs:complexContent> <xs:extension base="TestHierarchy"> <xs:sequence> <xs:element name="Certificate" type="Certificate" maxOccurs="unbounded"/> </xs:sequence> </xs:extension> </xs:complexContent> </xs:complexType>

element **Certificates/Certificate**

diagram	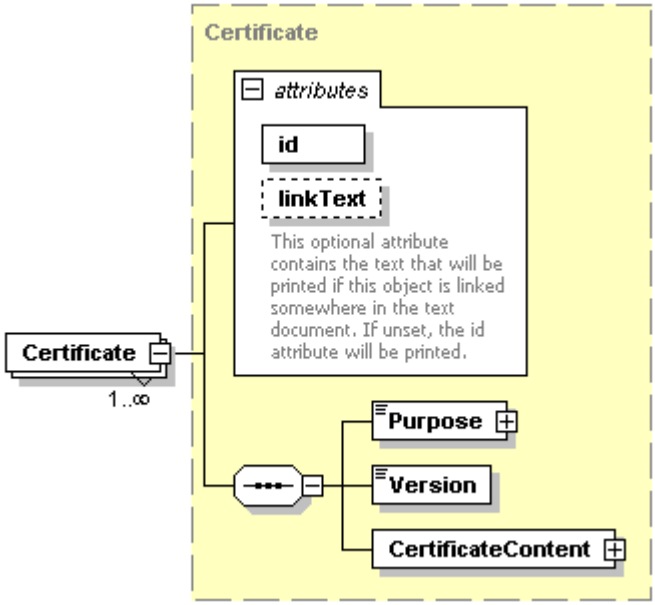
namespace	http://bsi.bund.de/TR03105
type	**Certificate**
properties	isRef 0 minOcc 1 maxOcc unbounded content complex
children	**Purpose** **Version** **CertificateContent**
attributes	Name / Type / Use / Default / Fixed / annotation id / **LinkIDType** / required linkText / **xs:string** / optional / documentation: This optional attribute c attribute will be printed.
source	<xs:element name="Certificate" type="Certificate" maxOccurs="unbounded"/>

complexType **Command**

diagram	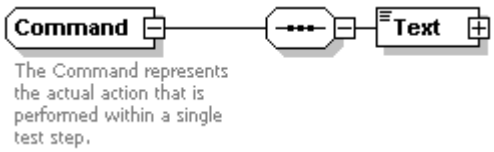
namespace	http://bsi.bund.de/TR03105
children	**Text**
used by	element **ActionStep/Command** complexType **APDUCommand**
annotation	documentation The Command represents the actual action that is performed within a single test step.
source	<xs:complexType name="Command"> <xs:annotation> <xs:documentation>The Command represents the actual action that is performed within a single test step.</xs:documentation> </xs:annotation>

```
  <xs:sequence>
    <xs:element name="Text" type="Hypertext"/>
  </xs:sequence>
</xs:complexType>
```

element **Command/Text**

diagram	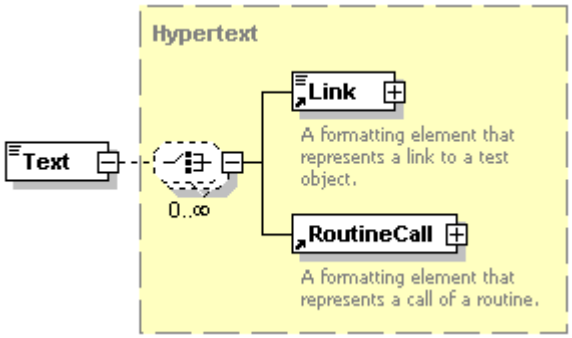
namespace	http://bsi.bund.de/TR03105
type	**Hypertext**
properties	isRef 0 content complex mixed true
children	**Link** **RoutineCall**
source	`<xs:element name="Text" type="Hypertext"/>`

complexType **Document**

diagram	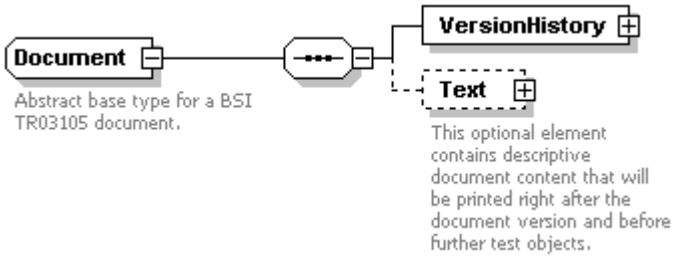
namespace	http://bsi.bund.de/TR03105
properties	abstract true
children	**VersionHistory** **Text**
used by	element **TR_03105_PART_3_3**
annotation	documentation Abstract base type for a BSI TR03105 document.

source	`<xs:complexType name="Document" abstract="true">`
	`  <xs:annotation>`
	`  <xs:documentation>Abstract base type for a BSI TR03105 document.</xs:documentation>`
	`  </xs:annotation>`
	`  <xs:sequence>`
	`  <xs:element name="VersionHistory">`

```
      <xs:complexType>
        <xs:sequence>
          <xs:element name="Version" maxOccurs="unbounded">
            <xs:complexType>
              <xs:sequence>
                <xs:element name="VersionID" type="xs:string"/>
                <xs:element name="Date" type="xs:date"/>
                <xs:element name="Editor" type="xs:string"/>
                <xs:element name="Description" type="xs:string"/>
              </xs:sequence>
            </xs:complexType>
          </xs:element>
        </xs:sequence>
      </xs:complexType>
    </xs:element>
    <xs:element name="Text" type="FormattedContent" minOccurs="0">
      <xs:annotation>
        <xs:documentation>This optional element contains descriptive document content that will be
printed right after the document version and before further test objects.</xs:documentation>
      </xs:annotation>
    </xs:element>
  </xs:sequence>
</xs:complexType>
```

element **Document/VersionHistory**

diagram	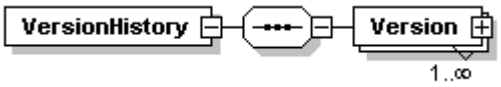
namespace	http://bsi.bund.de/TR03105
properties	isRef 0 content complex
children	**Version**

source

```
<xs:element name="VersionHistory">
  <xs:complexType>
    <xs:sequence>
      <xs:element name="Version" maxOccurs="unbounded">
        <xs:complexType>
          <xs:sequence>
            <xs:element name="VersionID" type="xs:string"/>
            <xs:element name="Date" type="xs:date"/>
            <xs:element name="Editor" type="xs:string"/>
            <xs:element name="Description" type="xs:string"/>
          </xs:sequence>
        </xs:complexType>
      </xs:element>
    </xs:sequence>
  </xs:complexType>
</xs:element>
```

element **Document/VersionHistory/Version**

diagram	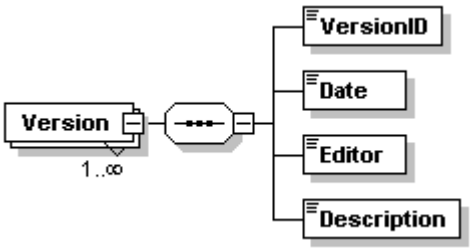
namespace	http://bsi.bund.de/TR03105
properties	isRef 0 minOcc 1 maxOcc unbounded content complex
children	VersionID Date Editor Description

source	`<xs:element name="Version" maxOccurs="unbounded">`
	`  <xs:complexType>`
	`  <xs:sequence>`
	`  <xs:element name="VersionID" type="xs:string"/>`
	`  <xs:element name="Date" type="xs:date"/>`
	`  <xs:element name="Editor" type="xs:string"/>`
	`  <xs:element name="Description" type="xs:string"/>`
	`  </xs:sequence>`
	`  </xs:complexType>`
	`</xs:element>`

element **Document/VersionHistory/Version/VersionID**

diagram	
namespace	http://bsi.bund.de/TR03105
type	**xs:string**
properties	isRef 0 content simple
source	`<xs:element name="VersionID" type="xs:string"/>`

element **Document/VersionHistory/Version/Date**

diagram	
namespace	http://bsi.bund.de/TR03105
type	**xs:date**
properties	isRef 0 content simple
source	`<xs:element name="Date" type="xs:date"/>`

element **Document/VersionHistory/Version/Editor**

diagram	
namespace	http://bsi.bund.de/TR03105
type	**xs:string**
properties	isRef 0 content simple
source	<xs:element name="Editor" type="xs:string"/>

element **Document/VersionHistory/Version/Description**

diagram	
namespace	http://bsi.bund.de/TR03105
type	**xs:string**
properties	isRef 0 content simple
source	<xs:element name="Description" type="xs:string"/>

element **Document/Text**

diagram	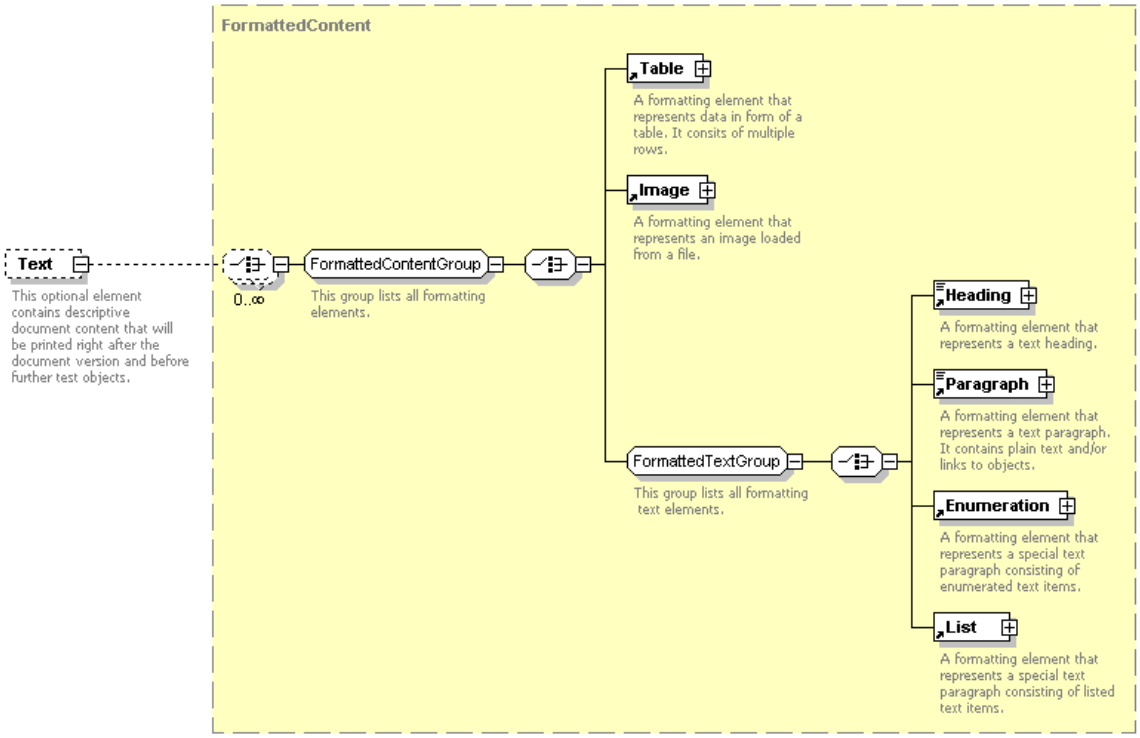
namespace	http://bsi.bund.de/TR03105
type	**FormattedContent**
properties	isRef 0 minOcc 0

	maxOcc 1 content complex
children	**Table** **Image** **Heading** **Paragraph** **Enumeration** **List**
annotation	documentation This optional element contains descriptive document content that will be printed right after the document version and before further test objects.
source	<xs:element name="Text" type="FormattedContent" minOccurs="0"> <xs:annotation> <xs:documentation>This optional element contains descriptive document content that will be printed right after the document version and before further test objects.</xs:documentation> </xs:annotation> </xs:element>

complexType **FormattedContent**

diagram	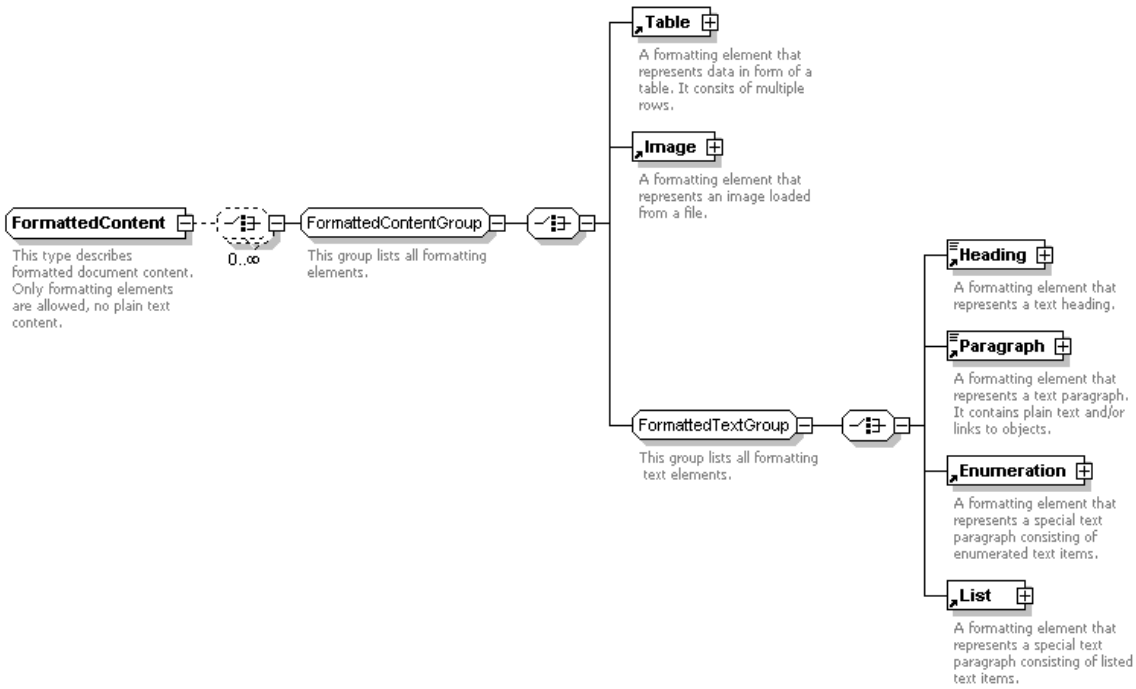
namespace	http://bsi.bund.de/TR03105
children	**Table** **Image** **Heading** **Paragraph** **Enumeration** **List**
used by	elements **TestHierarchy/Text** **Document/Text**
annotation	documentation This type describes formatted document content. Only formatting elements are allowed, no plain text content.
source	<xs:complexType name="FormattedContent">\ <xs:annotation> <xs:documentation>This type describes formatted document content. Only formatting elements are allowed, no plain text content.</xs:documentation> </xs:annotation> <xs:choice minOccurs="0" maxOccurs="unbounded">\ <xs:group ref="FormattedContentGroup"/> </xs:choice> </xs:complexType>

complexType **FormattedText**

diagram	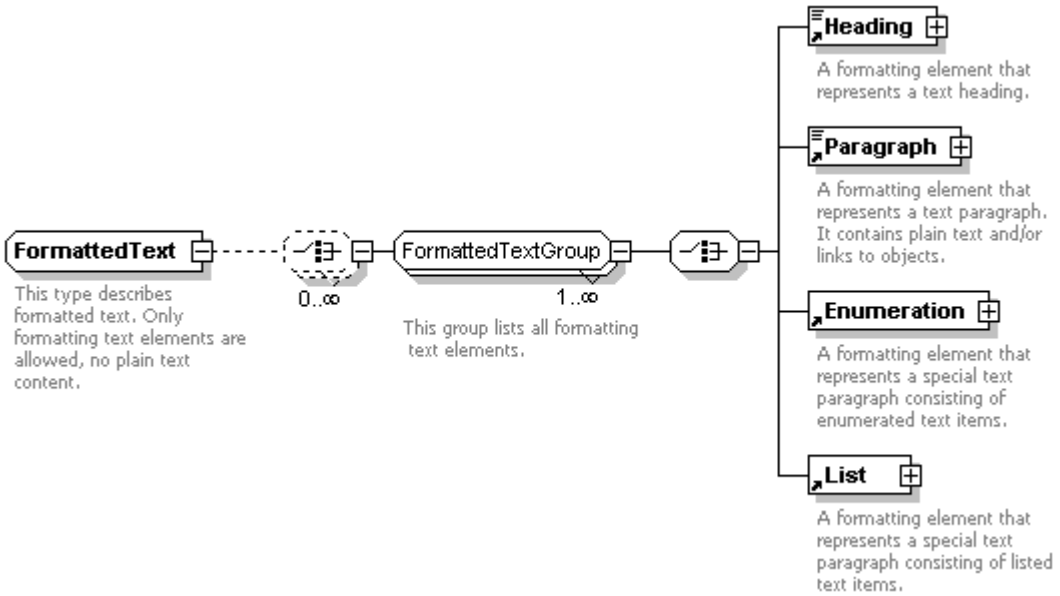
namespace	http://bsi.bund.de/TR03105
children	**Heading** **Paragraph** **Enumeration** **List**
annotation	documentation This type describes formatted text. Only formatting text elements are allowed, no plain text content.
source	<xs:complexType name="FormattedText"> <xs:annotation> <xs:documentation>This type describes formatted text. Only formatting text elements are allowed, no plain text content.</xs:documentation> </xs:annotation> <xs:choice minOccurs="0" maxOccurs="unbounded"> <xs:group ref="FormattedTextGroup" maxOccurs="unbounded"/> </xs:choice> </xs:complexType>

complexType **Hypertext**

diagram	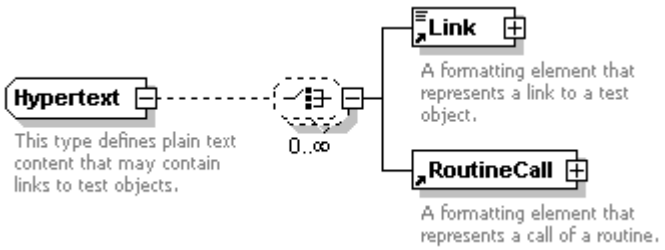
namespace	http://bsi.bund.de/TR03105
properties	mixed true
children	**Link** **RoutineCall**
used by	elements **Table/Row/Cell** **TestCase/Comment** **ActionStep/Description** **Enumeration/Item** **List/Item**

	Paragraph TestCase/Postcondition TestCase/Precondition Certificate/Purpose TestCase/Purpose Routine/Purpose Command/Text Result/Text
annotation	documentation This type defines plain text content that may contain links to test objects.
source	<xs:complexType name="Hypertext" mixed="true"> <xs:annotation> <xs:documentation>This type defines plain text content that may contain links to test objects.</xs:documentation> </xs:annotation> <xs:choice minOccurs="0" maxOccurs="unbounded"> <xs:element ref="Link"/> <xs:element ref="RoutineCall"/> </xs:choice> </xs:complexType>

complexType **KeyValueType**

diagram	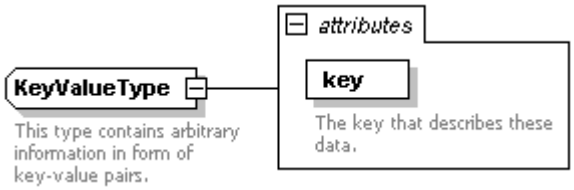
namespace	http://bsi.bund.de/TR03105
type	extension of **xs:string**
properties	base xs:string
used by	elements TestCase/MetaData Routine/MetaData Routine/Parameter RoutineCall/Parameter
attributes	Name: key; Type: **xs:string**; Use: required; Default; Fixed; annotation: documentation: The key that describes
annotation	documentation This type contains arbitrary information in form of key-value pairs.
source	<xs:complexType name="KeyValueType"> <xs:annotation> <xs:documentation>This type contains arbitrary information in form of key-value pairs.</xs:documentation> </xs:annotation> <xs:simpleContent> <xs:extension base="xs:string"> <xs:attribute name="key" type="xs:string" use="required"> <xs:annotation> <xs:documentation>The key that describes these data.</xs:documentation> </xs:annotation> </xs:attribute> </xs:extension> </xs:simpleContent> </xs:complexType>

attribute **KeyValueType/@key**

type	**xs:string**
properties	isRef 0 use required
annotation	documentation The key that describes these data.
source	<xs:attribute name="key" type="xs:string" use="required"> <xs:annotation> <xs:documentation>The key that describes these data.</xs:documentation> </xs:annotation> </xs:attribute>

complexType **Link**

diagram	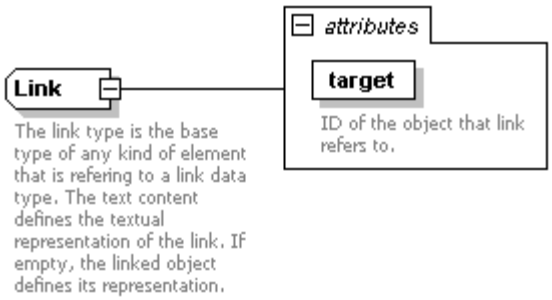
namespace	http://bsi.bund.de/TR03105
properties	mixed true
used by	element **Link**
attributes	Name: target; Type: **LinkIDType**; Use: required; Default; Fixed; annotation: documentation: ID of the object that link
annotation	documentation The link type is the base type of any kind of element that is refering to a link data type. The text content defines the textual representation of the link. If empty, the linked object defines its representation.
source	<xs:complexType name="Link" mixed="true">\ <xs:annotation> <xs:documentation>The link type is the base type of any kind of element that is refering to a link data type. The text content defines the textual representation of the link. If empty, the linked object defines its representation.</xs:documentation> </xs:annotation> <xs:attribute name="target" type="LinkIDType" use="required">\ <xs:annotation> <xs:documentation>ID of the object that link refers to.</xs:documentation> </xs:annotation> </xs:attribute> </xs:complexType>

attribute **Link/@target**

type	**LinkIDType**
properties	isRef 0 use required
annotation	documentation ID of the object that link refers to.

source	<xs:attribute name="target" type="LinkIDType" use="required"> <xs:annotation> <xs:documentation>ID of the object that link refers to.</xs:documentation> </xs:annotation> </xs:attribute>

complexType **LinkData**

diagram	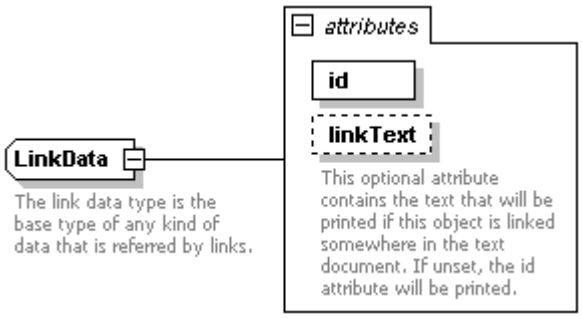
namespace	http://bsi.bund.de/TR03105
used by	complexTypes **Certificate** **Profile** **Reference**
attributes	Name / Type / Use / Default / Fixed / annotation id / **LinkIDType** / required linkText / **xs:string** / optional / documentation: This optional attribute c attribute will be printed.
annotation	documentation The link data type is the base type of any kind of data that is referred by links.
source	<xs:complexType name="LinkData">…</xs:complexType>

```
<xs:complexType name="LinkData">
  <xs:annotation>
    <xs:documentation>The link data type is the base type of any kind of data that is referred by links.</xs:documentation>
  </xs:annotation>
  <xs:attribute name="id" type="LinkIDType" use="required"/>
  <xs:attribute name="linkText" type="xs:string" use="optional">
    <xs:annotation>
      <xs:documentation>This optional attribute contains the text that will be printed if this object is linked somewhere in the text document. If unset, the id attribute will be printed.</xs:documentation>
    </xs:annotation>
  </xs:attribute>
</xs:complexType>
```

attribute **LinkData/@id**

type	**LinkIDType**
properties	isRef 0 use required
source	<xs:attribute name="id" type="LinkIDType" use="required"/>

attribute **LinkData/@linkText**

type	**xs:string**
properties	isRef 0 use optional
annotation	documentation This optional attribute contains the text that will be printed if this object is linked somewhere in the text document. If unset, the id attribute will be printed.
source	<xs:attribute name="linkText" type="xs:string" use="optional"> <xs:annotation> <xs:documentation>This optional attribute contains the text that will be printed if this object is linked somewhere in the text document. If unset, the id attribute will be printed.</xs:documentation> </xs:annotation> </xs:attribute>

complexType **Profile**

diagram	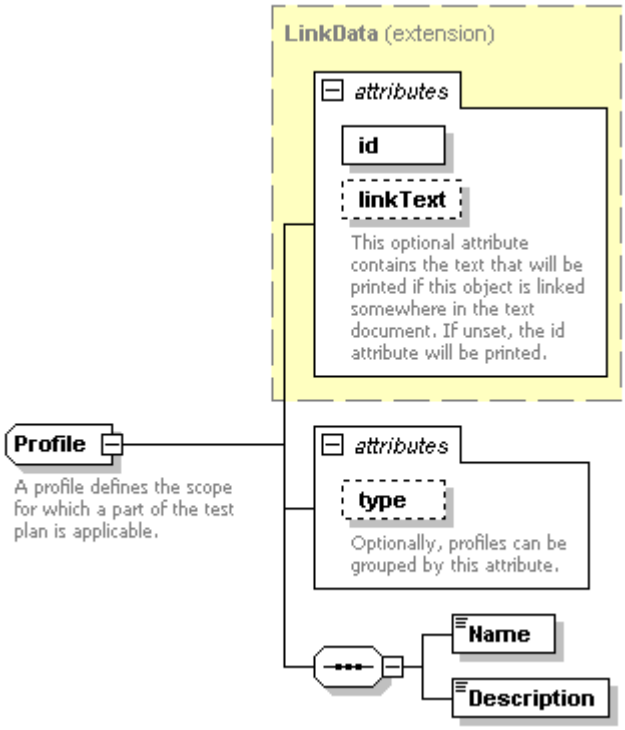
namespace	http://bsi.bund.de/TR03105
type	extension of **LinkData**
properties	base LinkData
children	**Name** **Description**
used by	element **Profiles/Profile**

attributes

Name	Type	Use	Default	Fixed	annotation
id	**LinkIDType**	required			
linkText	**xs:string**	optional			documentation This optional attribute c attribute will be printed.
type	**xs:string**	optional			documentation Optionally, profiles can

annotation	documentation A profile defines the scope for which a part of the test plan is applicable.
source	<xs:complexType name="Profile"> <xs:annotation> <xs:documentation>A profile defines the scope for which a part of the test plan is applicable.</xs:documentation> </xs:annotation> <xs:complexContent> <xs:extension base="LinkData"> <xs:sequence> <xs:element name="Name" type="xs:string"/> <xs:element name="Description" type="xs:string"/> </xs:sequence> <xs:attribute name="type" type="xs:string" use="optional"> <xs:annotation> <xs:documentation>Optionally, profiles can be grouped by this attribute.</xs:documentation> </xs:annotation> </xs:attribute> </xs:extension> </xs:complexContent> </xs:complexType>

attribute **Profile/@type**

type	**xs:string**
properties	isRef 0 use optional
annotation	documentation Optionally, profiles can be grouped by this attribute.
source	<xs:attribute name="type" type="xs:string" use="optional">\ <xs:annotation> <xs:documentation>Optionally, profiles can be grouped by this attribute.</xs:documentation> </xs:annotation> </xs:attribute>

element **Profile/Name**

diagram	
namespace	http://bsi.bund.de/TR03105
type	**xs:string**
properties	isRef 0 content simple
source	<xs:element name="Name" type="xs:string"/>

element **Profile/Description**

diagram	

namespace	http://bsi.bund.de/TR03105
type	**xs:string**
properties	isRef 0 content simple
source	<xs:element name="Description" type="xs:string"/>

complexType **Profiles**

diagram	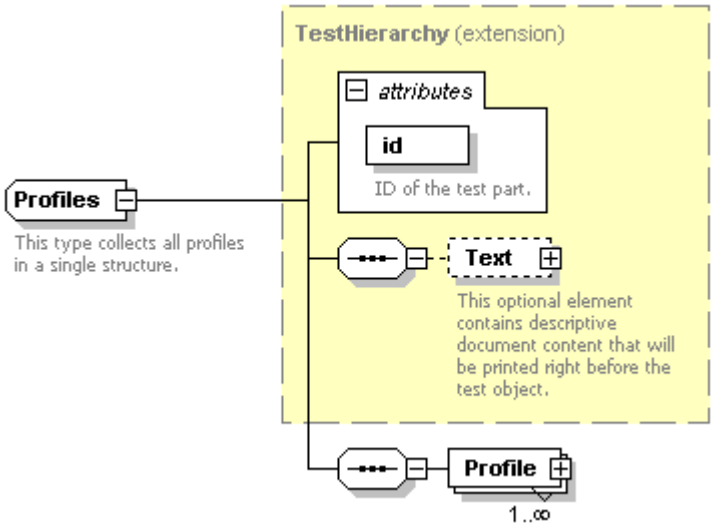
namespace	http://bsi.bund.de/TR03105
type	extension of **TestHierarchy**
properties	base TestHierarchy
children	**Text** **Profile**
used by	element **Profiles**
attributes	Name: id; Type: **LinkIDType**; Use: required; Default; Fixed; annotation: documentation: ID of the test part.
annotation	documentation This type collects all profiles in a single structure.
source	<xs:complexType name="Profiles"> <xs:annotation> <xs:documentation>This type collects all profiles in a single structure.</xs:documentation> </xs:annotation> <xs:complexContent> <xs:extension base="TestHierarchy"> <xs:sequence> <xs:element name="Profile" type="Profile" maxOccurs="unbounded"/> </xs:sequence> </xs:extension> </xs:complexContent> </xs:complexType>

element **Profiles/Profile**

diagram

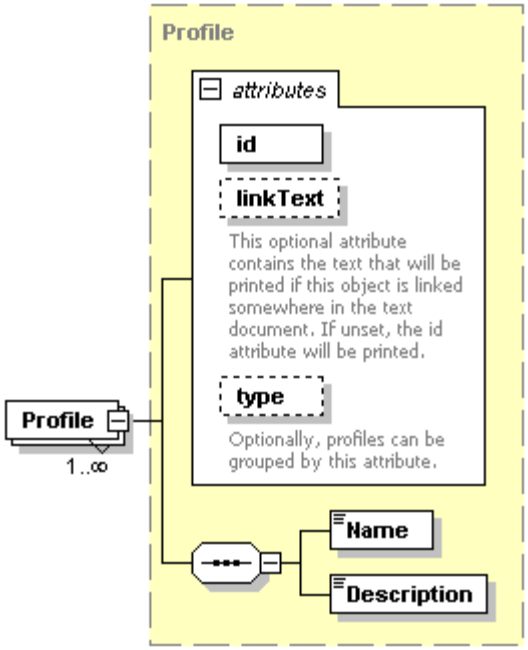

namespace	http://bsi.bund.de/TR03105
type	**Profile**
properties	isRef 0 minOcc 1 maxOcc unbounded content complex
children	**Name** **Description**

attributes

Name	Type	Use	Default	Fixed	annotation
id	**LinkIDType**	required			
linkText	**xs:string**	optional			documentation This optional attribute c attribute will be printed.
type	**xs:string**	optional			documentation Optionally, profiles can

source

```
<xs:element name="Profile" type="Profile" maxOccurs="unbounded"/>
```

complexType **Reference**

diagram	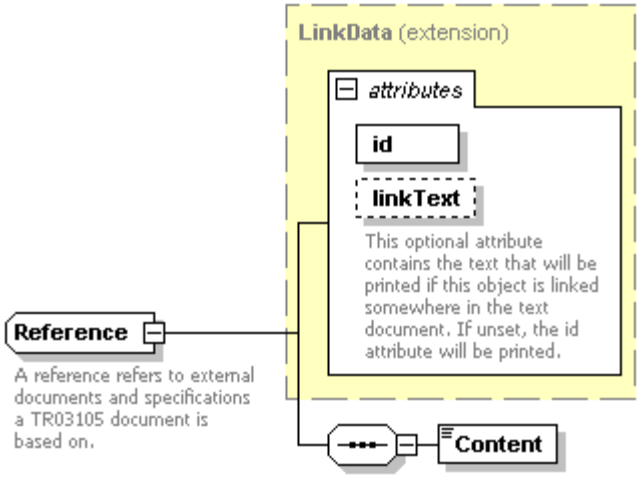
namespace	http://bsi.bund.de/TR03105
type	extension of **LinkData**
properties	base LinkData
children	**Content**
used by	element **References/Reference**
attributes	Name / Type / Use / Default / Fixed / annotation id / **LinkIDType** / required linkText / **xs:string** / optional / documentation: This optional attribute c attribute will be printed.
annotation	documentation A reference refers to external documents and specifications a TR03105 document is based on.

source	`<xs:complexType name="Reference">`
	`  <xs:annotation>`
	`  <xs:documentation>A reference refers to external documents and specifications a TR03105 document is based on.</xs:documentation>`
	`  </xs:annotation>`
	`  <xs:complexContent>`
	`  <xs:extension base="LinkData">`
	`  <xs:sequence>`
	`  <xs:element name="Content" type="xs:string"/>`
	`  </xs:sequence>`
	`  </xs:extension>`
	`  </xs:complexContent>`
	`</xs:complexType>`

element **Reference/Content**

diagram	**Content**
namespace	http://bsi.bund.de/TR03105
type	**xs:string**
properties	isRef 0 content simple

source	<xs:element name="Content" type="xs:string"/>

complexType **References**

diagram	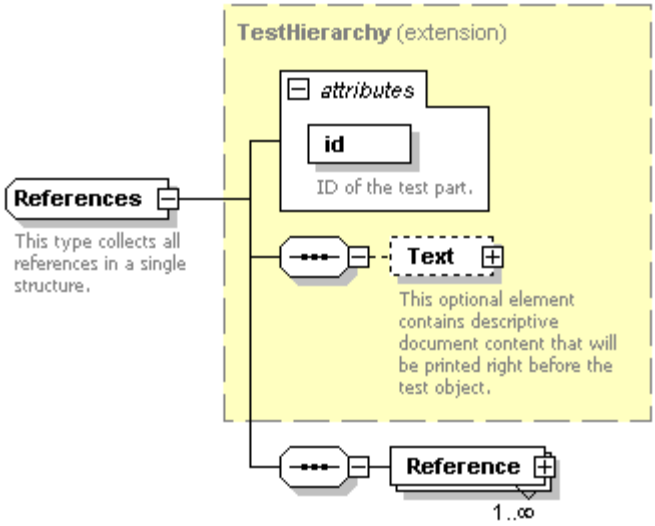
namespace	http://bsi.bund.de/TR03105
type	extension of **TestHierarchy**
properties	base TestHierarchy
children	**Text** **Reference**
used by	element **References**
attributes	Name: id; Type: **LinkIDType**; Use: required; Default; Fixed; annotation: documentation: ID of the test part.
annotation	documentation: This type collects all references in a single structure.

source

```
<xs:complexType name="References">
  <xs:annotation>
    <xs:documentation>This type collects all references in a single structure.</xs:documentation>
  </xs:annotation>
  <xs:complexContent>
    <xs:extension base="TestHierarchy">
      <xs:sequence>
        <xs:element name="Reference" type="Reference" maxOccurs="unbounded"/>
      </xs:sequence>
    </xs:extension>
  </xs:complexContent>
</xs:complexType>
```

element **References/Reference**

diagram	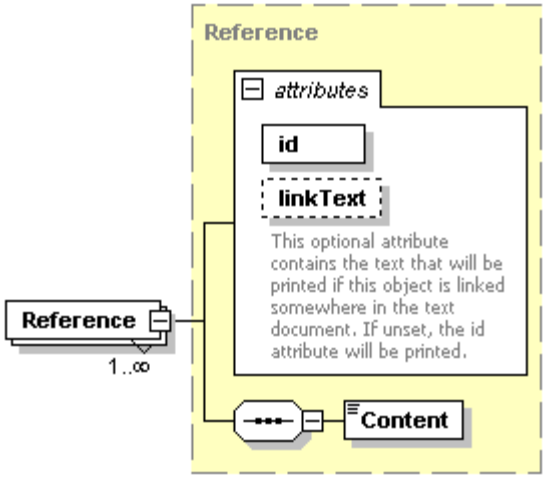
namespace	http://bsi.bund.de/TR03105
type	**Reference**
properties	isRef 0 minOcc 1 maxOcc unbounded content complex
children	**Content**
attributes	Name / Type / Use / Default / Fixed / annotation id / **LinkIDType** / required linkText / **xs:string** / optional / documentation: This optional attribute c attribute will be printed.
source	`<xs:element name="Reference" type="Reference" maxOccurs="unbounded"/>`

complexType **Result**

diagram	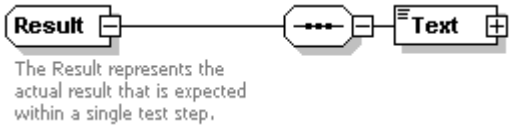
namespace	http://bsi.bund.de/TR03105
children	**Text**
used by	element **ActionStep/ExpectedResult** complexType **APDUResult**
annotation	documentation The Result represents the actual result that is expected within a single test step.

source	`<xs:complexType name="Result">`
	`  <xs:annotation>`
	`  <xs:documentation>The Result represents the actual result that is expected within a single test step.</xs:documentation>`
	`  </xs:annotation>`
	`  <xs:sequence>`
	`  <xs:element name="Text" type="Hypertext"/>`
	`  </xs:sequence>`
	`</xs:complexType>`

element **Result/Text**

diagram	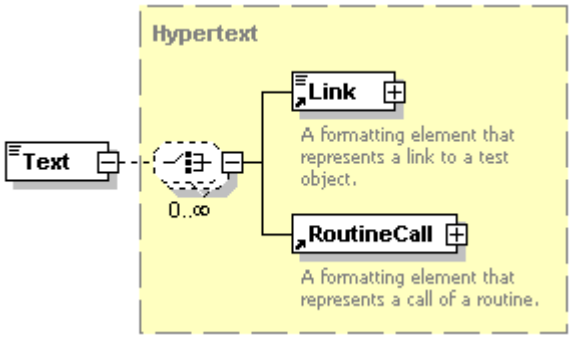
namespace	http://bsi.bund.de/TR03105
type	**Hypertext**
properties	isRef 0 content complex mixed true
children	**Link** **RoutineCall**
source	<xs:element name="Text" type="Hypertext"/>

complexType **Routine**

diagram

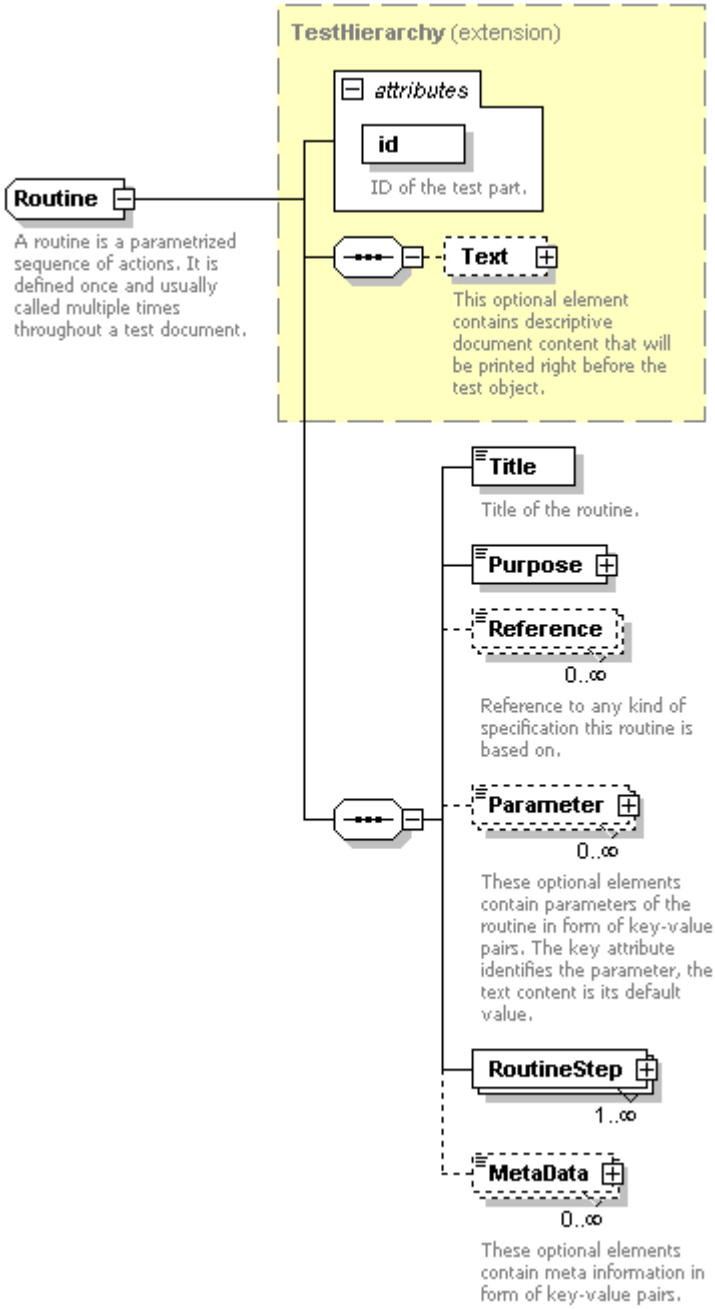

namespace	http://bsi.bund.de/TR03105
type	extension of **TestHierarchy**
properties	base TestHierarchy
children	**Text** **Title** **Purpose** **Reference** **Parameter** **RoutineStep** **MetaData**
used by	element **Routines/Routine**

attributes

Name	Type	Use	Default	Fixed	annotation
id	**LinkIDType**	required			documentation ID of the test part.

annotation

documentation

A routine is a parametrized sequence of actions. It is defined once and usually called multiple times throughout a test document.

source

```
<xs:complexType name="Routine">
  <xs:annotation>
    <xs:documentation>A routine is a parametrized sequence of actions. It is defined once and usually called multiple times throughout a test document.</xs:documentation>
  </xs:annotation>
  <xs:complexContent>
    <xs:extension base="TestHierarchy">
      <xs:sequence>
        <xs:element name="Title" type="xs:string">
          <xs:annotation>
            <xs:documentation>Title of the routine.</xs:documentation>
          </xs:annotation>
        </xs:element>
        <xs:element name="Purpose" type="Hypertext"/>
        <xs:element name="Reference" type="LinkIDType" minOccurs="0" maxOccurs="unbounded">
          <xs:annotation>
            <xs:documentation>Reference to any kind of specification this routine is based on.</xs:documentation>
          </xs:annotation>
        </xs:element>
        <xs:element name="Parameter" type="KeyValueType" minOccurs="0" maxOccurs="unbounded">
          <xs:annotation>
            <xs:documentation>These optional elements contain parameters of the routine in form of key-value pairs. The key attribute identifies the parameter, the text content is its default value.</xs:documentation>
          </xs:annotation>
        </xs:element>
        <xs:element name="RoutineStep" type="ActionStep" maxOccurs="unbounded"/>
        <xs:element name="MetaData" type="KeyValueType" minOccurs="0" maxOccurs="unbounded">
          <xs:annotation>
            <xs:documentation>These optional elements contain meta information in form of key-value pairs.</xs:documentation>
          </xs:annotation>
        </xs:element>
      </xs:sequence>
    </xs:extension>
  </xs:complexContent>
</xs:complexType>
```

element **Routine/Title**

diagram	
namespace	http://bsi.bund.de/TR03105
type	**xs:string**
properties	isRef 0 content simple
annotation	documentation Title of the routine.

source	<xs:element name="Title" type="xs:string"> <xs:annotation> <xs:documentation>Title of the routine.</xs:documentation> </xs:annotation> </xs:element>

element **Routine/Purpose**

diagram	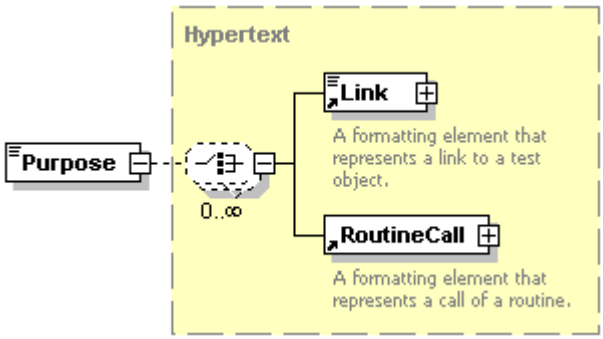
namespace	http://bsi.bund.de/TR03105
type	**Hypertext**
properties	isRef 0 content complex mixed true
children	**Link** **RoutineCall**
source	<xs:element name="Purpose" type="Hypertext"/>

element **Routine/Reference**

diagram	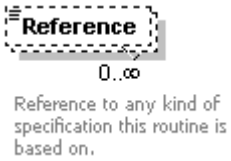
namespace	http://bsi.bund.de/TR03105
type	**LinkIDType**
properties	isRef 0 minOcc 0 maxOcc unbounded content simple
annotation	documentation Reference to any kind of specification this routine is based on.
source	<xs:element name="Reference" type="LinkIDType" minOccurs="0" maxOccurs="unbounded"> <xs:annotation> <xs:documentation>Reference to any kind of specification this routine is based on.</xs:documentation> </xs:annotation> </xs:element>

element **Routine/Parameter**

diagram	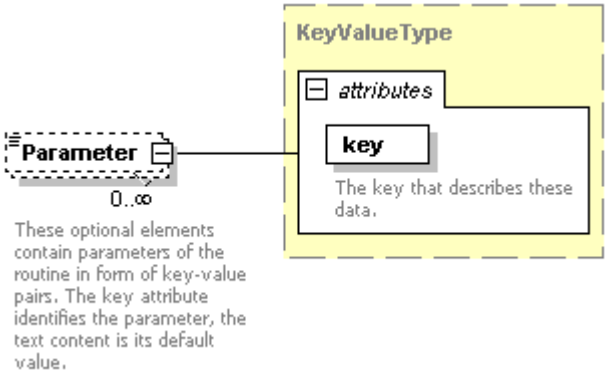
namespace	http://bsi.bund.de/TR03105
type	**KeyValueType**
properties	isRef 0 minOcc 0 maxOcc unbounded content complex
attributes	Name: key; Type: **xs:string**; Use: required; Default; Fixed; annotation: documentation: The key that describes
annotation	documentation These optional elements contain parameters of the routine in form of key-value pairs. The key attribute identifies the parameter, the text content is its default value.

source	`<xs:element name="Parameter" type="KeyValueType" minOccurs="0" maxOccurs="unbounded">`
	`<xs:annotation>`
	`<xs:documentation>`These optional elements contain parameters of the routine in form of key-value pairs. The key attribute identifies the parameter, the text content is its default value.`</xs:documentation>`
	`</xs:annotation>`
	`</xs:element>`

element **Routine/RoutineStep**

diagram	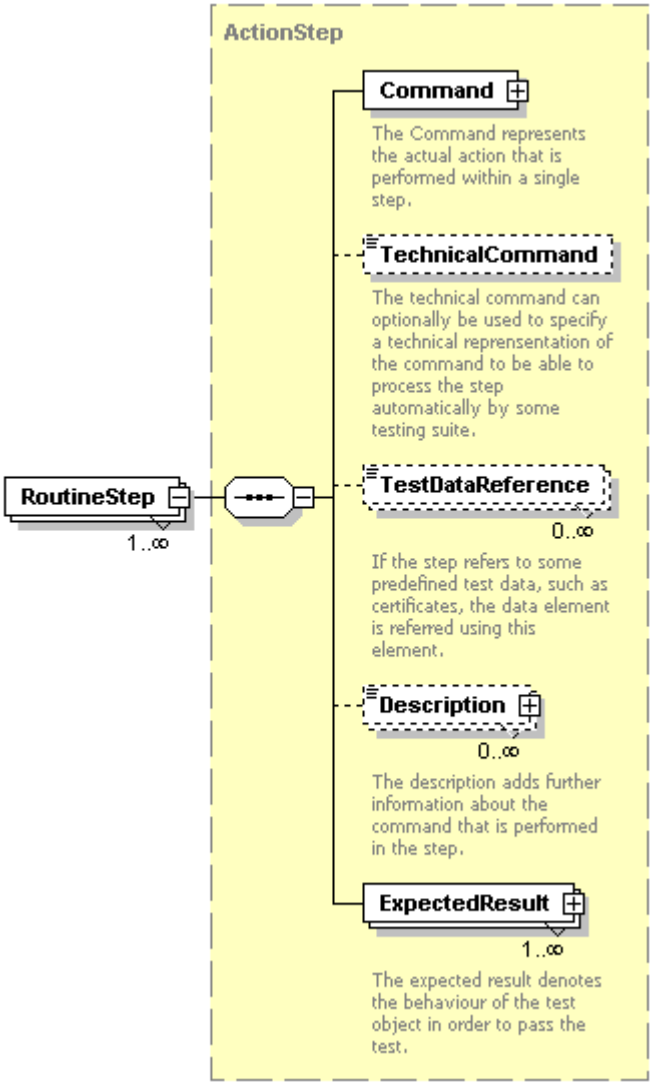
namespace	http://bsi.bund.de/TR03105
type	**ActionStep**
properties	isRef 0 minOcc 1 maxOcc unbounded content complex
children	**Command** **TechnicalCommand** **TestDataReference** **Description** **ExpectedResult**
source	<xs:element name="RoutineStep" type="ActionStep" maxOccurs="unbounded"/>

element **Routine/MetaData**

diagram	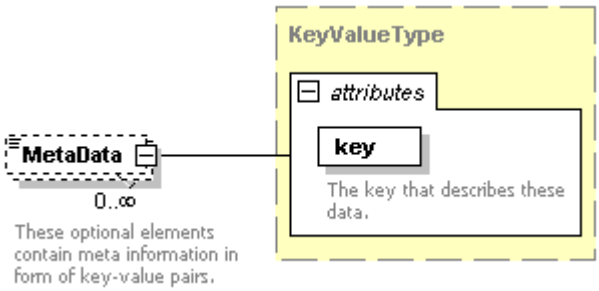
namespace	http://bsi.bund.de/TR03105
type	**KeyValueType**
properties	isRef 0 minOcc 0 maxOcc unbounded content complex
attributes	Name: key; Type: **xs:string**; Use: required; Default; Fixed; annotation: documentation: The key that describes
annotation	documentation These optional elements contain meta information in form of key-value pairs.

source	`<xs:element name="MetaData" type="KeyValueType" minOccurs="0" maxOccurs="unbounded">`
	`<xs:annotation>`
	`<xs:documentation>`These optional elements contain meta information in form of key-value pairs.`</xs:documentation>`
	`</xs:annotation>`
	`</xs:element>`

complexType **RoutineCall**

diagram	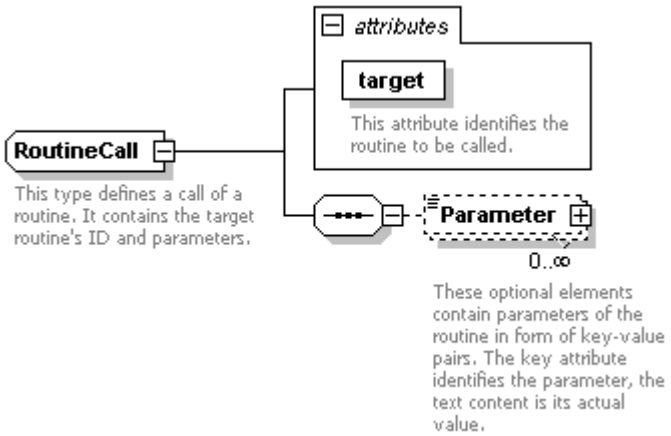
namespace	http://bsi.bund.de/TR03105
children	**Parameter**
used by	element **RoutineCall**
attributes	Name: target; Type: **LinkIDType**; Use: required; Default; Fixed; annotation: documentation: This attribute identifies
annotation	documentation This type defines a call of a routine. It contains the target routine's ID and parameters.

source	<xs:complexType name="RoutineCall"> <xs:annotation> <xs:documentation>This type defines a call of a routine. It contains the target routine's ID and parameters.</xs:documentation> </xs:annotation> <xs:sequence> <xs:element name="Parameter" type="KeyValueType" minOccurs="0" maxOccurs="unbounded"> <xs:annotation> <xs:documentation>These optional elements contain parameters of the routine in form of key-value pairs. The key attribute identifies the parameter, the text content is its actual value.</xs:documentation> </xs:annotation> </xs:element> </xs:sequence> <xs:attribute name="target" type="LinkIDType" use="required"> <xs:annotation> <xs:documentation>This attribute identifies the routine to be called.</xs:documentation> </xs:annotation> </xs:attribute> </xs:complexType>

attribute **RoutineCall/@target**

type	**LinkIDType**
properties	isRef 0 use required
annotation	documentation This attribute identifies the routine to be called.
source	<xs:attribute name="target" type="LinkIDType" use="required"> <xs:annotation> <xs:documentation>This attribute identifies the routine to be called.</xs:documentation> </xs:annotation> </xs:attribute>

element **RoutineCall/Parameter**

diagram	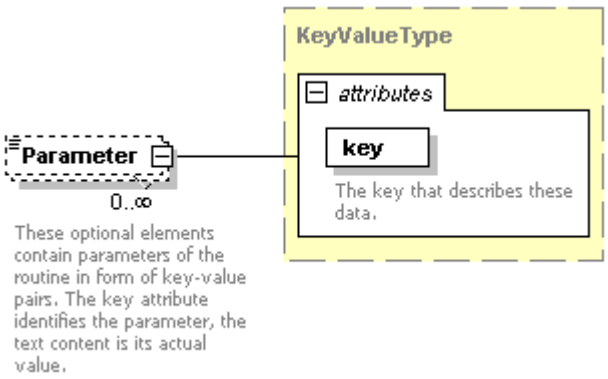
namespace	http://bsi.bund.de/TR03105
type	**KeyValueType**

properties	isRef 0 minOcc 0 maxOcc unbounded content complex
attributes	Name: key Type: **xs:string** Use: required Default: Fixed: annotation: documentation The key that describes
annotation	documentation These optional elements contain parameters of the routine in form of key-value pairs. The key attribute identifies the parameter, the text content is its actual value.

source	`<xs:element name="Parameter" type="KeyValueType" minOccurs="0" maxOccurs="unbounded">`
	`<xs:annotation>`
	`<xs:documentation>`These optional elements contain parameters of the routine in form of key-value pairs. The key attribute identifies the parameter, the text content is its actual value.`</xs:documentation>`
	`</xs:annotation>`
	`</xs:element>`

complexType **Routines**

diagram	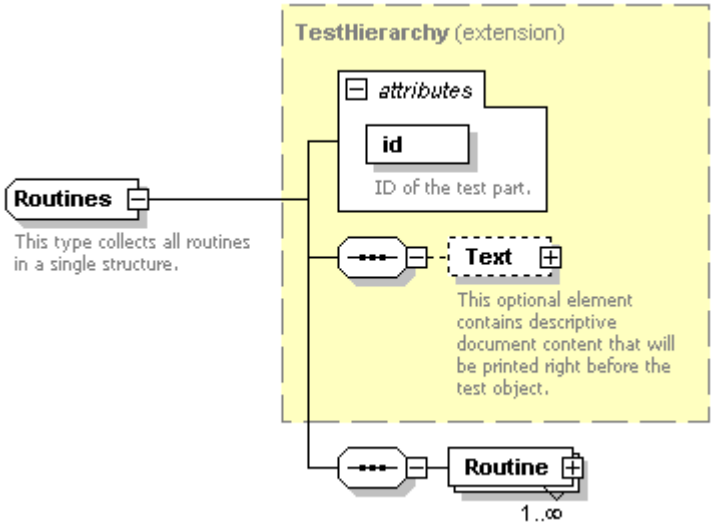
namespace	http://bsi.bund.de/TR03105
type	extension of **TestHierarchy**
properties	base TestHierarchy
children	**Text** **Routine**
used by	element **Routines**
attributes	Name: id Type: **LinkIDType** Use: required Default: Fixed: annotation: documentation ID of the test part.
annotation	documentation This type collects all routines in a single structure.

source	`<xs:complexType name="Routines">`
	`<xs:annotation>`
	`<xs:documentation>`This type collects all routines in a single structure.`</xs:documentation>`
	`</xs:annotation>`
	`<xs:complexContent>`
	`<xs:extension base="TestHierarchy">`

```
      <xs:sequence>
        <xs:element name="Routine" type="Routine" maxOccurs="unbounded"/>
      </xs:sequence>
    </xs:extension>
  </xs:complexContent>
</xs:complexType>
```

element **Routines/Routine**

diagram

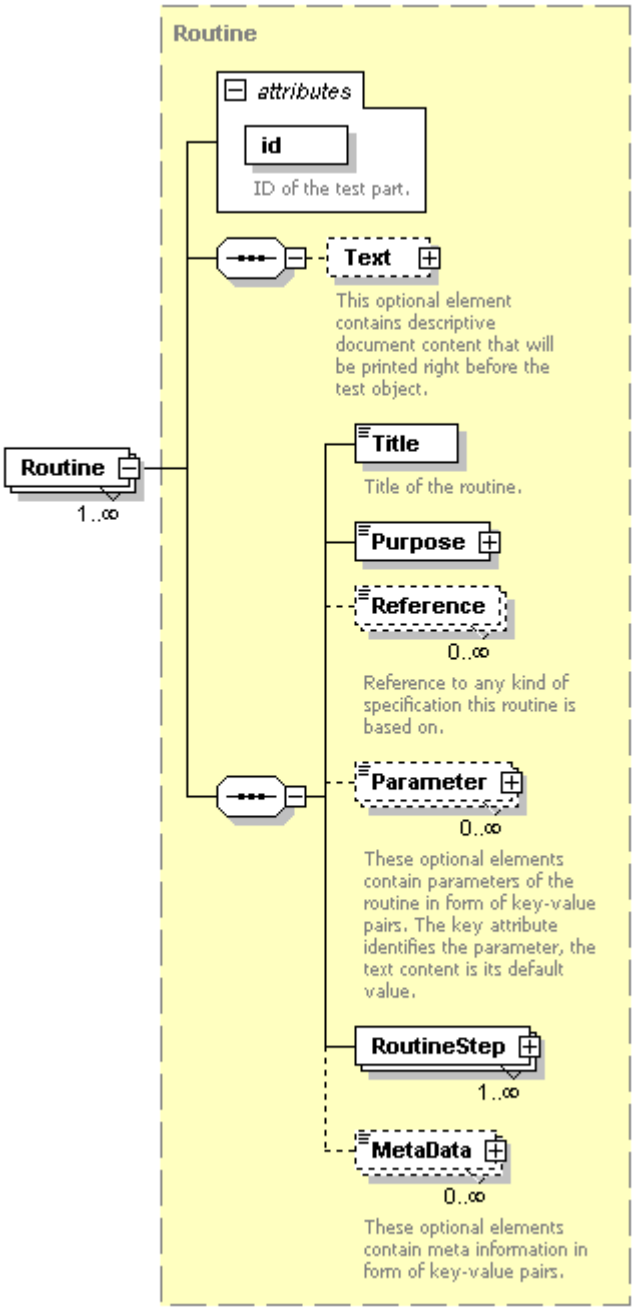

namespace	http://bsi.bund.de/TR03105

type	**Routine**
properties	isRef 0 minOcc 1 maxOcc unbounded content complex
children	**Text** **Title** **Purpose** **Reference** **Parameter** **RoutineStep** **MetaData**
attributes	Name: id Type: **LinkIDType** Use: required Default: Fixed: annotation: documentation ID of the test part.
source	<xs:element name="Routine" type="Routine" maxOccurs="unbounded"/>

complexType **TestCase**

diagram

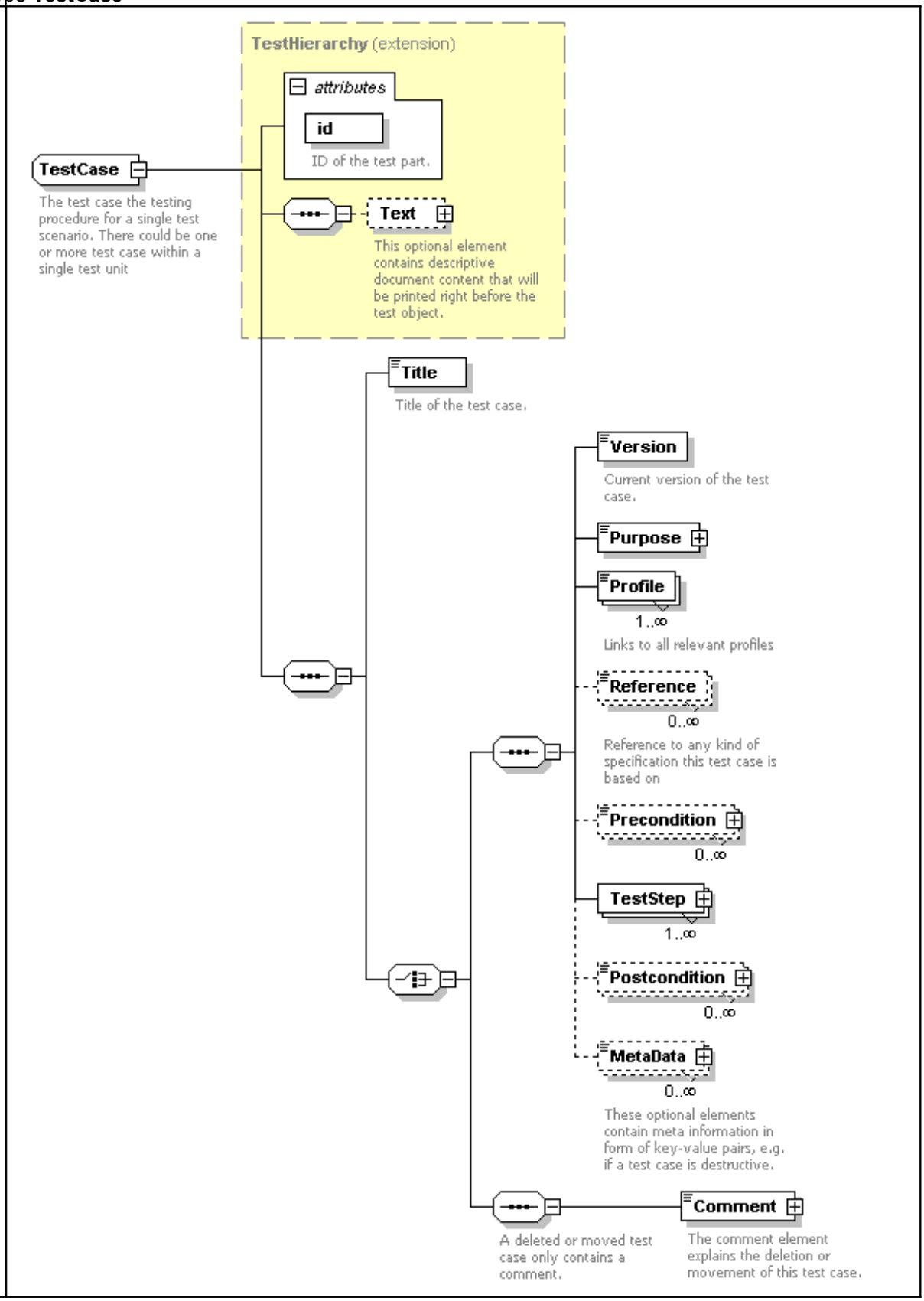

namespace	http://bsi.bund.de/TR03105
type	extension of **TestHierarchy**
properties	base TestHierarchy
children	**Text** **Title** **Version** **Purpose** **Profile** **Reference** **Precondition** **TestStep** **Postcondition** **MetaData** **Comment**
used by	element **TestCase**
attributes	Name: id; Type: **LinkIDType**; Use: required; Default; Fixed; annotation: documentation: ID of the test part.
annotation	documentation: The test case the testing procedure for a single test scenario. There could be one or more test case within a single test unit

source

```
<xs:complexType name="TestCase">
  <xs:annotation>
    <xs:documentation>The test case the testing procedure for a single test scenario. There could be one or more test case within a single test unit</xs:documentation>
  </xs:annotation>
  <xs:complexContent>
    <xs:extension base="TestHierarchy">
      <xs:sequence>
        <xs:element name="Title" type="xs:string">
          <xs:annotation>
            <xs:documentation>Title of the test case.</xs:documentation>
          </xs:annotation>
        </xs:element>
        <xs:choice>
          <xs:sequence>
            <xs:element name="Version" type="xs:string">
              <xs:annotation>
                <xs:documentation>Current version of the test case.</xs:documentation>
              </xs:annotation>
            </xs:element>
            <xs:element name="Purpose" type="Hypertext"/>
            <xs:element name="Profile" type="LinkIDType" maxOccurs="unbounded">
              <xs:annotation>
                <xs:documentation>Links to all relevant profiles</xs:documentation>
              </xs:annotation>
            </xs:element>
            <xs:element name="Reference" type="LinkIDType" minOccurs="0" maxOccurs="unbounded">
              <xs:annotation>
                <xs:documentation>Reference to any kind of specification this test case is based on</xs:documentation>
              </xs:annotation>
            </xs:element>
            <xs:element name="Precondition" type="Hypertext" minOccurs="0" maxOccurs="unbounded"/>
            <xs:element name="TestStep" type="ActionStep" maxOccurs="unbounded"/>
            <xs:element name="Postcondition" type="Hypertext" minOccurs="0" maxOccurs="unbounded"/>
            <xs:element name="MetaData" type="KeyValueType" minOccurs="0" maxOccurs="unbounded">
              <xs:annotation>
                <xs:documentation>These optional elements contain meta information in form of key-value pairs, e.g. if a test case is destructive.</xs:documentation>
              </xs:annotation>
```

```
          </xs:element>
        </xs:sequence>
        <xs:sequence>
          <xs:annotation>
            <xs:documentation>A deleted or moved test case only contains a
comment.</xs:documentation>
          </xs:annotation>
          <xs:element name="Comment" type="Hypertext">
            <xs:annotation>
              <xs:documentation>The comment element explains the deletion or movement of this test
case.</xs:documentation>
            </xs:annotation>
          </xs:element>
        </xs:sequence>
      </xs:choice>
    </xs:sequence>
  </xs:extension>
 </xs:complexContent>
</xs:complexType>
```

element **TestCase/Title**

diagram	Title Title of the test case.
namespace	http://bsi.bund.de/TR03105
type	**xs:string**
properties	isRef 0 content simple
annotation	documentation Title of the test case.

source	`<xs:element name="Title" type="xs:string">`
	`  <xs:annotation>`
	`  <xs:documentation>Title of the test case.</xs:documentation>`
	`  </xs:annotation>`
	`</xs:element>`

element **TestCase/Version**

diagram	Version Current version of the test case.
namespace	http://bsi.bund.de/TR03105
type	**xs:string**
properties	isRef 0 content simple
annotation	documentation Current version of the test case.
source	`<xs:element name="Version" type="xs:string">` `  <xs:annotation>`

	<xs:documentation>Current version of the test case.</xs:documentation> </xs:annotation> </xs:element>

element **TestCase/Purpose**

diagram	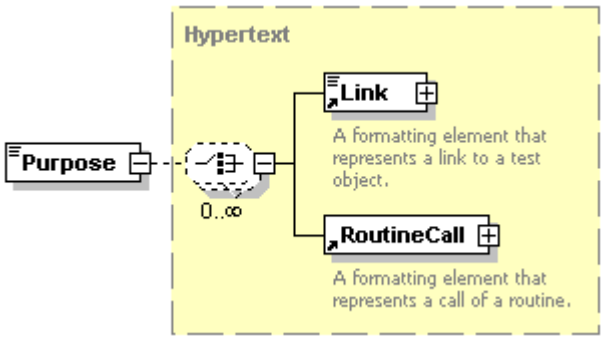
namespace	http://bsi.bund.de/TR03105
type	**Hypertext**
properties	isRef 0 content complex mixed true
children	**Link** **RoutineCall**
source	<xs:element name="Purpose" type="Hypertext"/>

element **TestCase/Profile**

diagram	
namespace	http://bsi.bund.de/TR03105
type	**LinkIDType**
properties	isRef 0 minOcc 1 maxOcc unbounded content simple
annotation	documentation Links to all relevant profiles
source	<xs:element name="Profile" type="LinkIDType" maxOccurs="unbounded"> <xs:annotation> <xs:documentation>Links to all relevant profiles</xs:documentation> </xs:annotation> </xs:element>

element **TestCase/Reference**

diagram	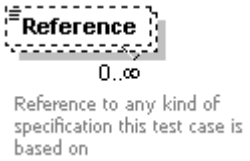
namespace	http://bsi.bund.de/TR03105
type	**LinkIDType**
properties	isRef 0 minOcc 0 maxOcc unbounded content simple
annotation	documentation Reference to any kind of specification this test case is based on
source	<xs:element name="Reference" type="LinkIDType" minOccurs="0" maxOccurs="unbounded"> <xs:annotation> <xs:documentation>Reference to any kind of specification this test case is based on</xs:documentation> </xs:annotation> </xs:element>

element **TestCase/Precondition**

diagram	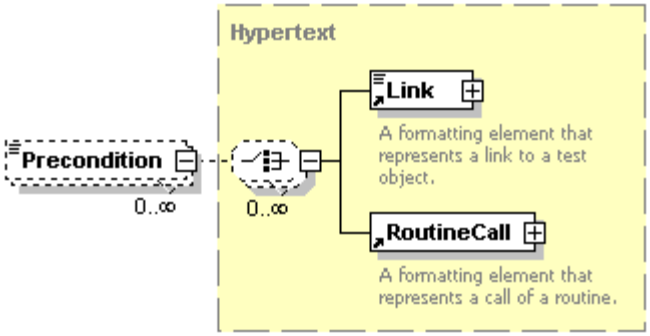
namespace	http://bsi.bund.de/TR03105
type	**Hypertext**
properties	isRef 0 minOcc 0 maxOcc unbounded content complex mixed true
children	**Link** **RoutineCall**
source	<xs:element name="Precondition" type="Hypertext" minOccurs="0" maxOccurs="unbounded"/>

element **TestCase/TestStep**

diagram	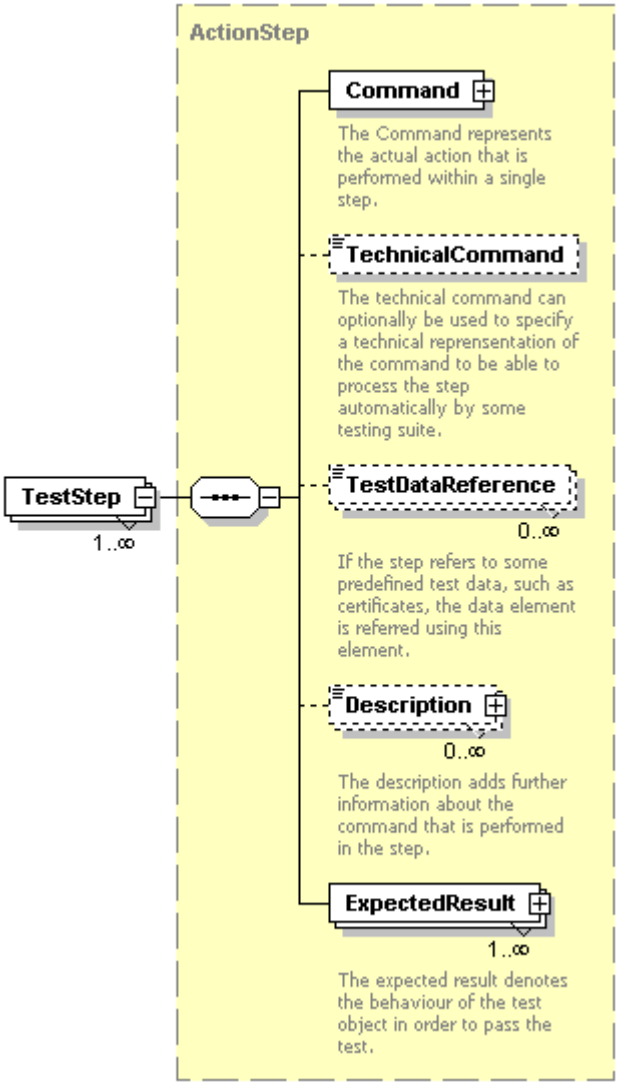
namespace	http://bsi.bund.de/TR03105
type	**ActionStep**
properties	isRef 0 minOcc 1 maxOcc unbounded content complex
children	**Command** **TechnicalCommand** **TestDataReference** **Description** **ExpectedResult**
source	<xs:element name="TestStep" type="ActionStep" maxOccurs="unbounded"/>

element **TestCase/Postcondition**

diagram	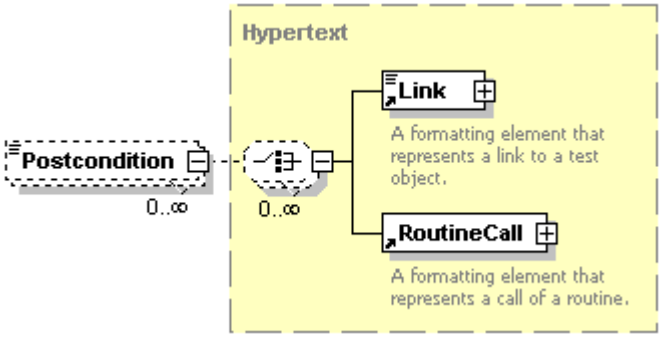
namespace	http://bsi.bund.de/TR03105
type	**Hypertext**
properties	isRef 0 minOcc 0 maxOcc unbounded content complex mixed true
children	**Link** **RoutineCall**
source	<xs:element name="Postcondition" type="Hypertext" minOccurs="0" maxOccurs="unbounded"/>

element **TestCase/MetaData**

diagram	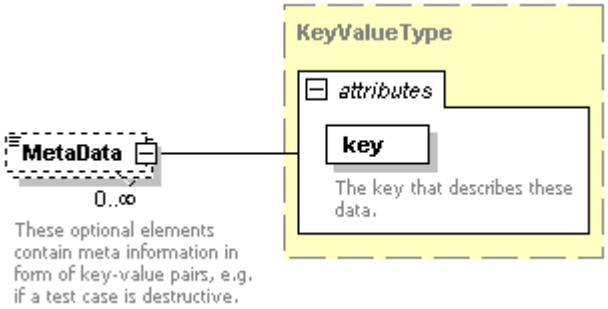
namespace	http://bsi.bund.de/TR03105
type	**KeyValueType**
properties	isRef 0 minOcc 0 maxOcc unbounded content complex
attributes	Name: key; Type: **xs:string**; Use: required; Default; Fixed; annotation: documentation: The key that describes
annotation	documentation These optional elements contain meta information in form of key-value pairs, e.g. if a test case is destructive.
source	<xs:element name="MetaData" type="KeyValueType" minOccurs="0" maxOccurs="unbounded"> <xs:annotation> <xs:documentation>These optional elements contain meta information in form of key-value pairs, e.g. if a test case is destructive.</xs:documentation> </xs:annotation> </xs:element>

element **TestCase/Comment**

diagram	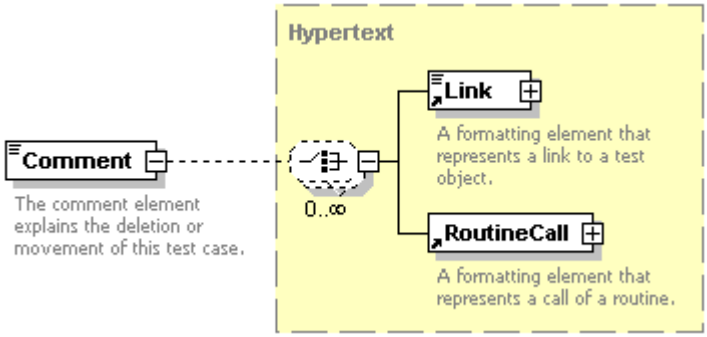
namespace	http://bsi.bund.de/TR03105
type	**Hypertext**
properties	isRef 0 content complex mixed true
children	**Link** **RoutineCall**
annotation	documentation The comment element explains the deletion or movement of this test case.

source	`<xs:element name="Comment" type="Hypertext">`
	`<xs:annotation>`
	`<xs:documentation>`The comment element explains the deletion or movement of this test case.`</xs:documentation>`
	`</xs:annotation>`
	`</xs:element>`

complexType **TestHierarchy**

diagram	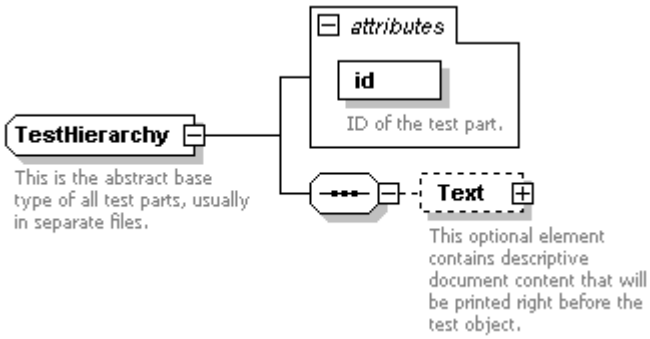
namespace	http://bsi.bund.de/TR03105
properties	abstract true
children	**Text**
used by	complexTypes **Certificates** **Profiles** **References** **Routine** **Routines** **TestCase** **TestLayer** **TestUnit**
attributes	Name: id; Type: **LinkIDType**; Use: required; Default; Fixed; annotation: documentation: ID of the test part.
annotation	documentation This is the abstract base type of all test parts, usually in separate files.

source	<xs:complexType name="TestHierarchy" abstract="true"> <xs:annotation> <xs:documentation>This is the abstract base type of all test parts, usually in separate files.</xs:documentation> </xs:annotation> <xs:sequence> <xs:element name="Text" type="FormattedContent" minOccurs="0"> <xs:annotation> <xs:documentation>This optional element contains descriptive document content that will be printed right before the test object.</xs:documentation> </xs:annotation> </xs:element> </xs:sequence> <xs:attribute name="id" type="LinkIDType" use="required"> <xs:annotation> <xs:documentation>ID of the test part.</xs:documentation> </xs:annotation> </xs:attribute> </xs:complexType>

attribute **TestHierarchy/@id**

type	**LinkIDType**
properties	isRef 0 use required
annotation	documentation ID of the test part.
source	<xs:attribute name="id" type="LinkIDType" use="required"> <xs:annotation> <xs:documentation>ID of the test part.</xs:documentation> </xs:annotation> </xs:attribute>

element **TestHierarchy/Text**

diagram	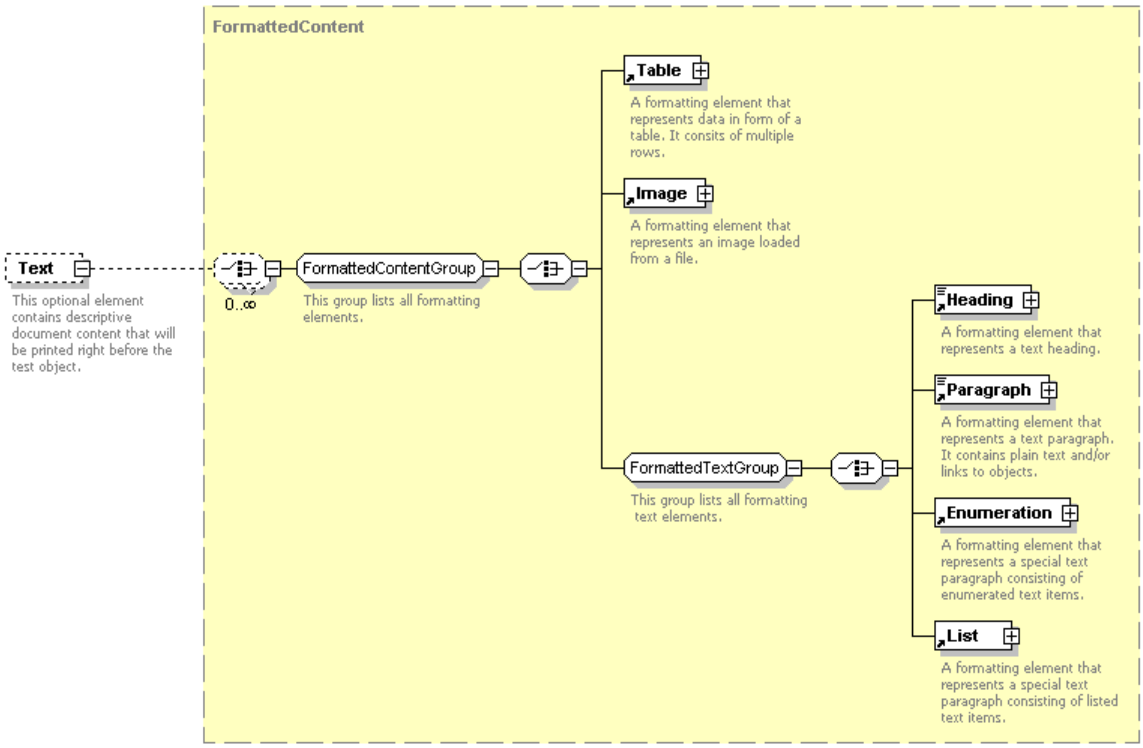
namespace	http://bsi.bund.de/TR03105
type	**FormattedContent**
properties	isRef 0 minOcc 0 maxOcc 1 content complex
children	**Table** **Image** **Heading** **Paragraph** **Enumeration** **List**
annotation	documentation This optional element contains descriptive document content that will be printed right before the test object.

source	`<xs:element name="Text" type="FormattedContent" minOccurs="0">`
	`<xs:annotation>`
	`<xs:documentation>`This optional element contains descriptive document content that will be printed right before the test object.`</xs:documentation>`
	`</xs:annotation>`
	`</xs:element>`

complexType **TestHierarchyReference**

diagram	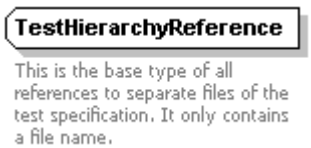
namespace	http://bsi.bund.de/TR03105
type	extension of **xs:string**
properties	base xs:string

used by	elements TR_03105_PART_3_3/CertificateDefinition TR_03105_PART_3_3/References TR_03105_PART_3_3/Routines TestUnit/TestCase TR_03105_PART_3_3/TestLayer TR_03105_PART_3_3/TestProfiles TestLayer/TestUnit
annotation	documentation This is the base type of all references to separate files of the test specification. It only contains a file name.
source	<xs:complexType name="TestHierarchyReference"> <xs:annotation> <xs:documentation>This is the base type of all references to separate files of the test specification. It only contains a file name.</xs:documentation> </xs:annotation> <xs:simpleContent> <xs:extension base="xs:string"/> </xs:simpleContent> </xs:complexType>

complexType **TestLayer**

diagram	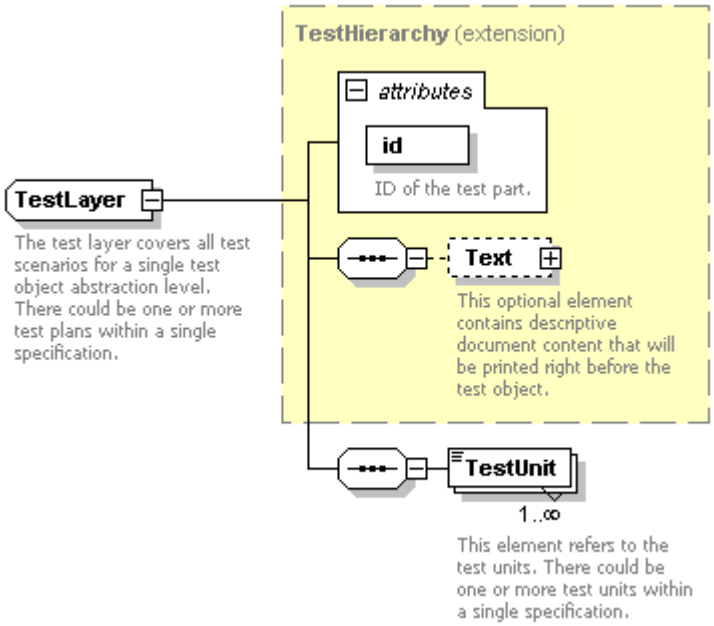
namespace	http://bsi.bund.de/TR03105
type	extension of TestHierarchy
properties	base TestHierarchy
children	Text TestUnit
used by	element TestLayer
attributes	Name: id; Type: LinkIDType; Use: required; Default; Fixed; annotation: documentation: ID of the test part.
annotation	documentation The test layer covers all test scenarios for a single test object abstraction level. There could be one or more test plans within a single specification.
source	<xs:complexType name="TestLayer"> <xs:annotation> <xs:documentation>The test layer covers all test scenarios for a single test object abstraction

```
level. There could be one or more test plans within a single specification.</xs:documentation>
  </xs:annotation>
  <xs:complexContent>
    <xs:extension base="TestHierarchy">
      <xs:sequence>
        <xs:element name="TestUnit" type="TestHierarchyReference" maxOccurs="unbounded">
          <xs:annotation>
            <xs:documentation>This element refers to the test units. There could be one or more test
units within a single specification.</xs:documentation>
          </xs:annotation>
        </xs:element>
      </xs:sequence>
    </xs:extension>
  </xs:complexContent>
</xs:complexType>
```

element **TestLayer/TestUnit**

diagram	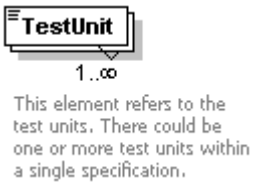
namespace	http://bsi.bund.de/TR03105
type	**TestHierarchyReference**
properties	isRef 0 minOcc 1 maxOcc unbounded content complex
annotation	documentation This element refers to the test units. There could be one or more test units within a single specification.

source	`<xs:element name="TestUnit" type="TestHierarchyReference" maxOccurs="unbounded">`
	`  <xs:annotation>`
	`  <xs:documentation>This element refers to the test units. There could be one or more test units within a single specification.</xs:documentation>`
	`  </xs:annotation>`
	`</xs:element>`

complexType **TestUnit**

diagram	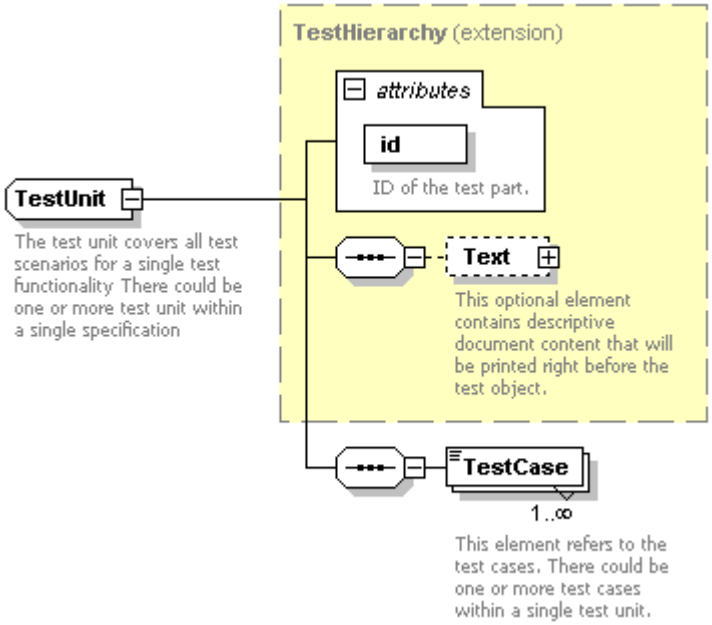
namespace	http://bsi.bund.de/TR03105
type	extension of **TestHierarchy**
properties	base TestHierarchy
children	**Text** **TestCase**
used by	element **TestUnit**
attributes	Name: id; Type: **LinkIDType**; Use: required; Default; Fixed; annotation: documentation: ID of the test part.
annotation	documentation The test unit covers all test scenarios for a single test functionality There could be one or more test unit within a single specification

source

```
<xs:complexType name="TestUnit">
  <xs:annotation>
    <xs:documentation>The test unit covers all test scenarios for a single test functionality There could be one or more test unit within a single specification</xs:documentation>
  </xs:annotation>
  <xs:complexContent>
    <xs:extension base="TestHierarchy">
      <xs:sequence>
        <xs:element name="TestCase" type="TestHierarchyReference" maxOccurs="unbounded">
          <xs:annotation>
            <xs:documentation>This element refers to the test cases. There could be one or more test cases within a single test unit.</xs:documentation>
          </xs:annotation>
        </xs:element>
      </xs:sequence>
    </xs:extension>
  </xs:complexContent>
</xs:complexType>
```

element **TestUnit/TestCase**

diagram	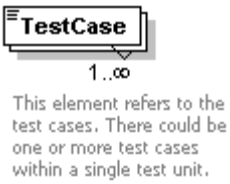
namespace	http://bsi.bund.de/TR03105
type	**TestHierarchyReference**
properties	isRef 0 minOcc 1 maxOcc unbounded content complex
annotation	documentation This element refers to the test cases. There could be one or more test cases within a single test unit.

source	`<xs:element name="TestCase" type="TestHierarchyReference" maxOccurs="unbounded">`
	`  <xs:annotation>`
	`  <xs:documentation>`This element refers to the test cases. There could be one or more test cases within a single test unit.`</xs:documentation>`
	`  </xs:annotation>`
	`</xs:element>`

simpleType **LinkIDType**

namespace	http://bsi.bund.de/TR03105
type	**xs:string**
used by	elements **TestCase/Profile** **TestCase/Reference** **Routine/Reference** **Certificate/CertificateContent/SignerCertificate** **ActionStep/TestDataReference** attributes **TestHierarchy/@id** **LinkData/@id** **RoutineCall/@target** **Link/@target**
annotation	documentation Type used by all ID attributes and elements.

source	`<xs:simpleType name="LinkIDType">`
	`  <xs:annotation>`
	`  <xs:documentation>`Type used by all ID attributes and elements.`</xs:documentation>`
	`  </xs:annotation>`
	`  <xs:restriction base="xs:string"/>`
	`</xs:simpleType>`

attributeGroup **NonTextBlockAttributes**

namespace	http://bsi.bund.de/TR03105
used by	elements **Image** **Table**
attributes	Name / Type / Use / Default / Fixed / annotation caption / **xs:string** / required / / / / documentation Caption text of the non- alternativeText / **xs:string** / required / / / / documentation This text, that describes
annotation	documentation All non-textual content must be explained by textual attributes.
source	`<xs:attributeGroup name="NonTextBlockAttributes">`

```
  <xs:annotation>
    <xs:documentation>All non-textual content must be explained by textual
attributes.</xs:documentation>
  </xs:annotation>
  <xs:attribute name="caption" type="xs:string" use="required">
    <xs:annotation>
      <xs:documentation>Caption text of the non-textual element.</xs:documentation>
    </xs:annotation>
  </xs:attribute>
  <xs:attribute name="alternativeText" type="xs:string" use="required">
    <xs:annotation>
      <xs:documentation>This text, that describes the non-textual element, will be used alternatively
if the element can not be presented properly.</xs:documentation>
    </xs:annotation>
  </xs:attribute>
</xs:attributeGroup>
```

XML Schema documentation generated by **XMLSpy** Schema Editor **http://www.altova.com/xmlspy**