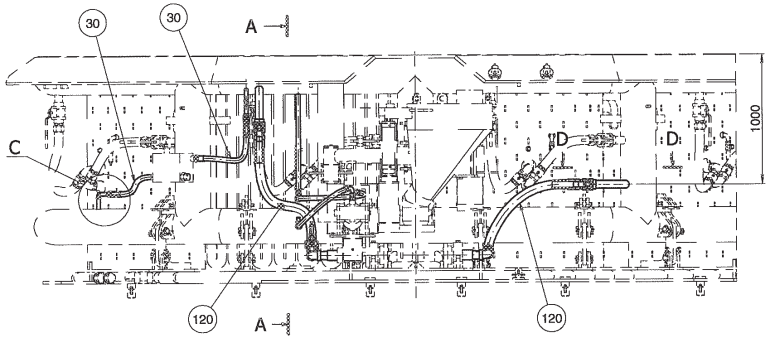

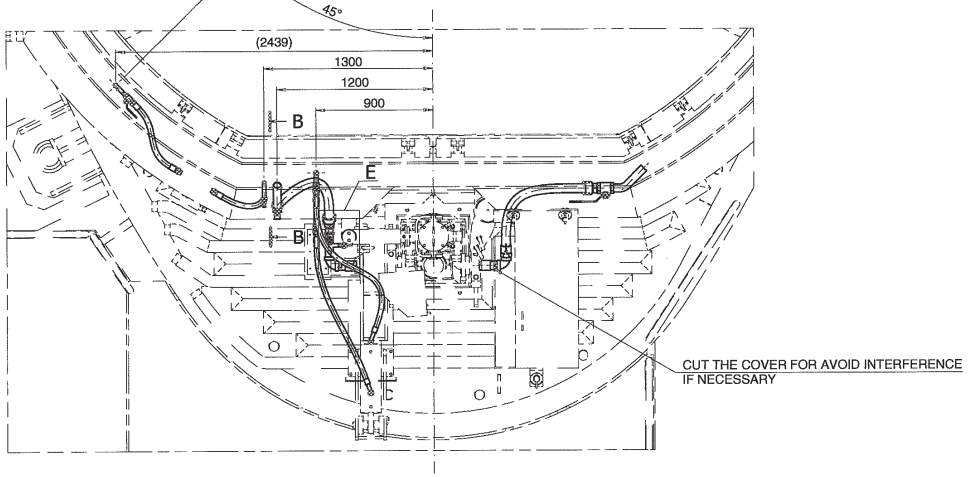

A-A (1 : 10)

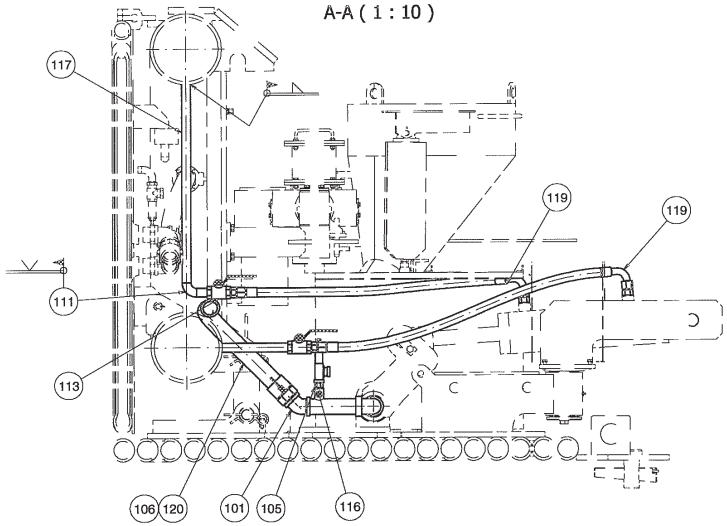

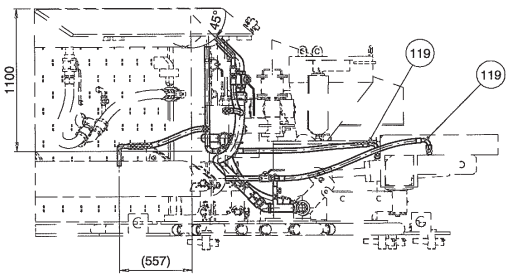

B-B (1 : 10)

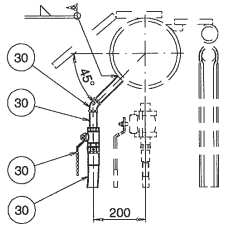

D-D (1 : 10)

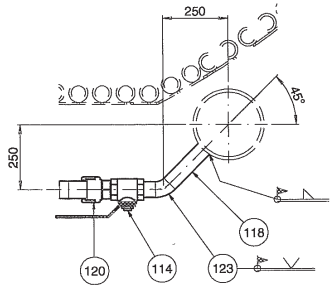

C (1 : 5)

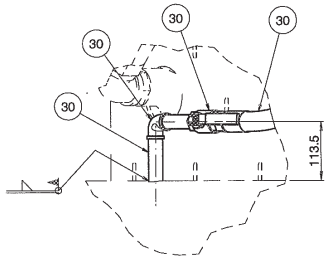

E (1 : 10)

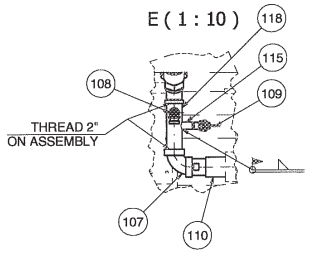

ISOMETRIC VIEW

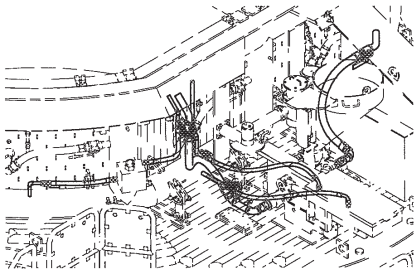

Rev.	Date	Revisions description	Drawn by	Checked by	Approved by
00	15 Feb 2017	EMESSO PER COSTRUZIONE ISSUED FOR CONSTRUCTION	Buphato J	Riga E	Pasut N

Material 1 (where not indicated on drawing) — State of supply Mat.1 — Danieli Supply Std. — Supply Class — Pattern DB

Material 2 — State of supply Mat.2 — Danieli Supply Std. — Supply Class — Casting code

Material 1 Equivalent

Heat Treatment

On Drawing Symbol, if required,

Coating

On Drawing Symbol, if required,

Unquoted radius (mm)	Unquoted bevels (mm)	Dimensions without tolerance as per	Machinings	Prec.Class	Max.Welding Class
		DANIELI STD 2.4.103	√/√√√√√√		A

Project Name

DANIELI CENTRO MET

Job nr

Obtained from 8.767117.B

Replaces

Family code/Machine code: AVEEAF

Weight (Kg): 65 — J (Kgm²)

Title: SAND CHARGING + CAMERA WATER COOLED

Scale: 1:20

Format: A1

Nr. of sheets: 001

Sheet: 001 — Follow

DANIELI Shop number: 8.807604.L

Revision: 00

DANIELI dwg number

According to law DANIELI & C.SpA considers this document to be a company secret and therefore prohibits any person to reproduce or disclose it or make it known in whole or in part to other parties or to competitors without specific written authorization of DANIELI's Management

File nr FD12-002-499-557.IDW

SALDATURE DA ESEGUIRE IN CANTIERE
WELDS TO BE DONE ON SITE

SALDATURE A NORMA DANIELI STD 2.8.006 CLASSE A

WELDS AS PER DANIELI STD 2.8.006 CLASS ...

DOVE NON INDICATO A = 0.7 DELLO SPESSORE MINIMO DA COLLEGARE

WHERE NOT INDICATED A = 0.7 OF MINIMUM THICKNESS TO BE WELDED

NOTA / NOTE :

- ESEGUIRE UN ACCURATO LAVAGGIO INTERNO ELIMINANDO TUTTI I CORPI ESTRANEI.
  ACCURATELY CLEAN THE INSIDE REMOVING ALL DIRTY
- ESEGUIRE PROVA DI TENUTA SECONDO DANIELI STD 2.8.102 CON FLUIDO ACQUA
  SEAL TEST TO BE CARRIED OUT ACCORDING TO DANIELI STD N.2.8.102 WITH FLUID WATER
- DOPO LA PROVA SVUOTARE E TAPPARE IL CIRCUITO
  EMPTY AND PLUG THE CIRCUIT AFTER TESTING
- PRESSIONE DI ESERCIZIO / WORKING PRESSURE : 0.6 MPa
- PRESSIONE DI COLLAUDO / TEST PRESSURE : 0.9 MPa
  PER / FOR : 2 ORE / HOURS.

DIMENSIONS VERIFY ON SITE

COMPUTER AIDED DESIGN — I