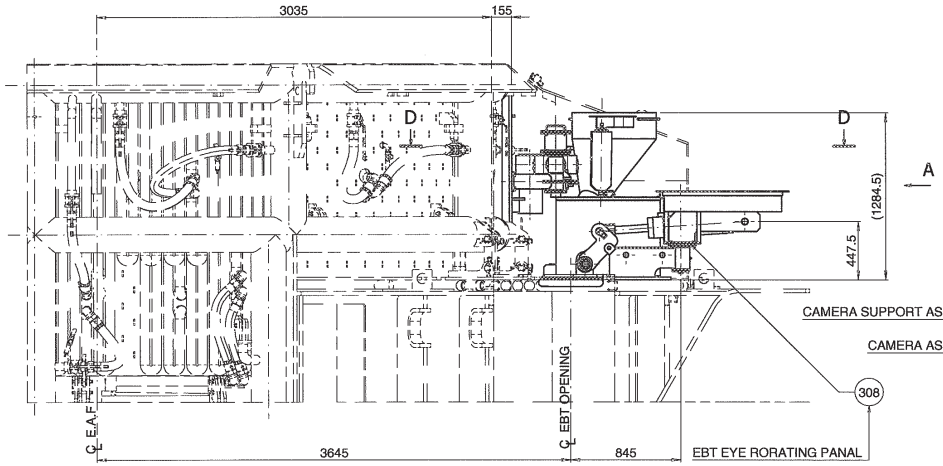

VIEW "A"
CAMELA INSTALLATION ASSEMBLY

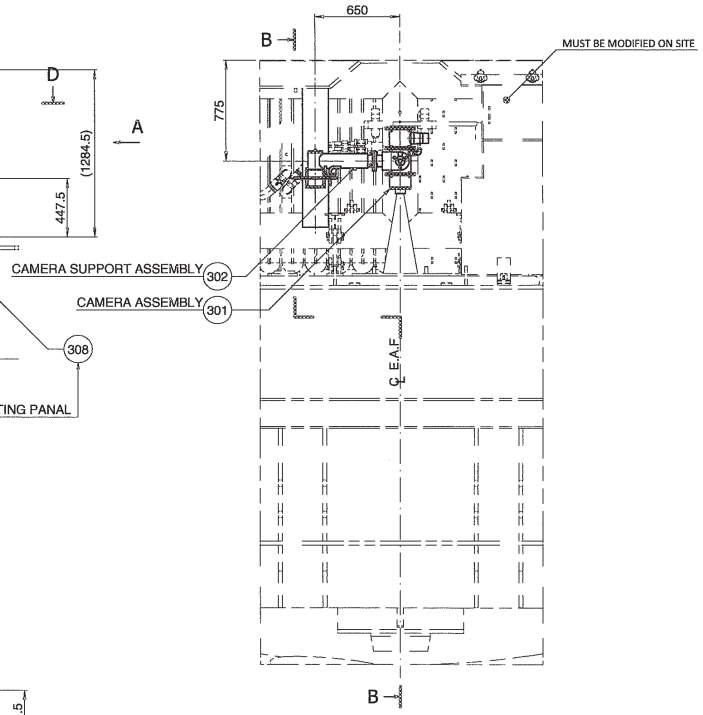

B-B

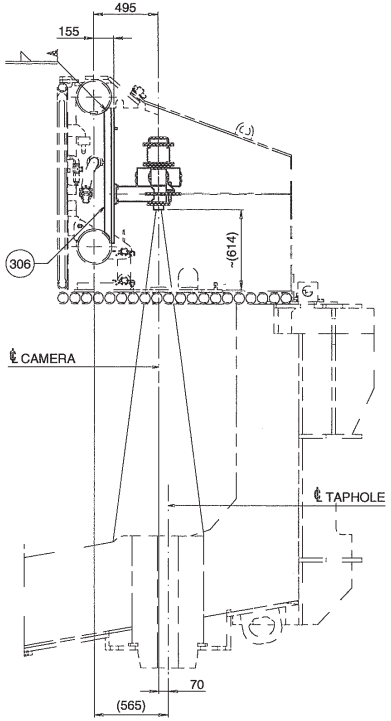

D-D (1 : 10)

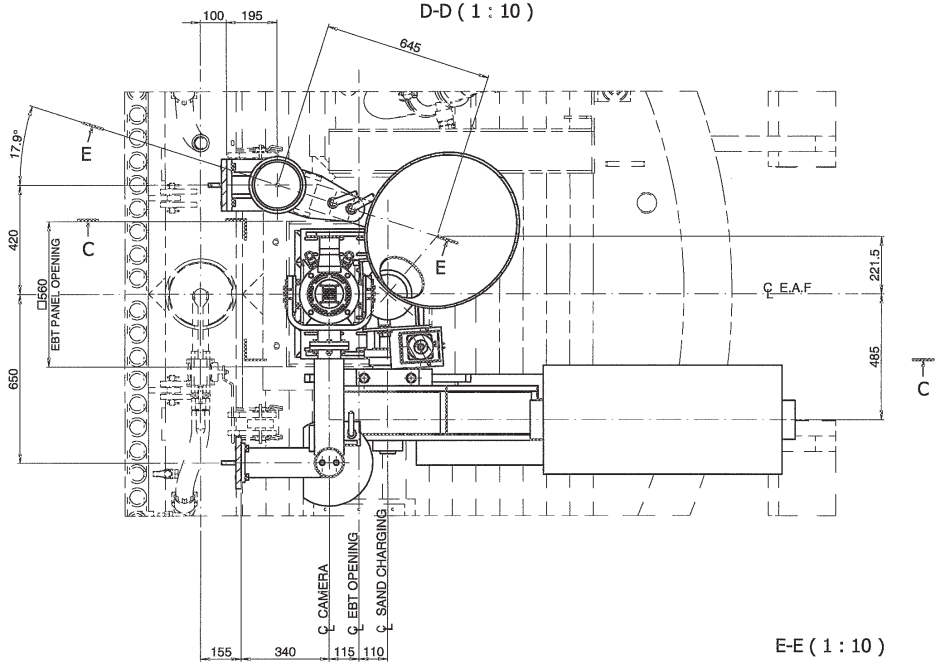

C-C
SAND CHARGING INSTALLATION ASSEMBLY

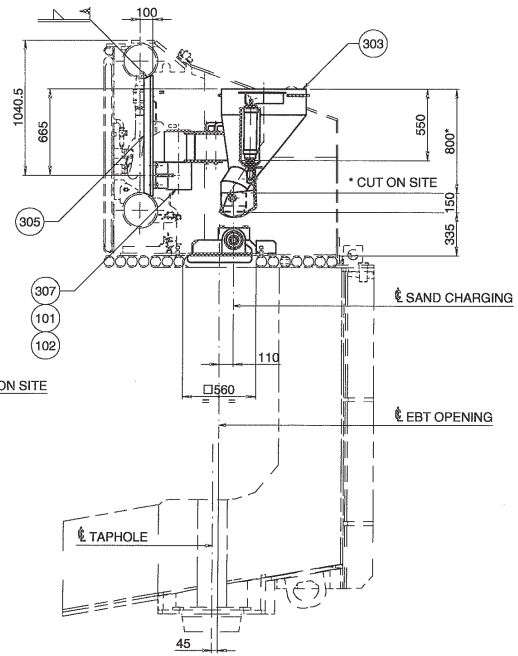

E-E (1 : 10)

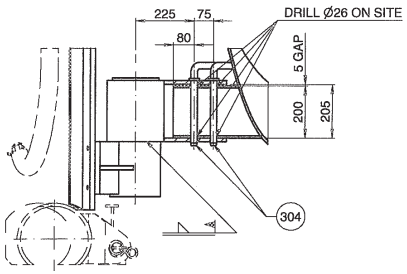

309 EBT COVER PNEUMATIC INSTALLATION

310 SAND CHARGING + CAMERA WATER COOLED

311 EBT COVER HYDRAULIC PIPING

312 SAND CHARGING + CAMERA ELECTRACAL SYSTEM

313 GUARD MODIFY

WELDS AS PER DANIELI STD 2.8.006

WELDS TO BE DONE ON SITE

WELDS TO BE DONE ON WORKSHOP

SALDATURE A NORMA DANIELI STD 2.8.006 CLASSE A

WELDS AS PER DANIELI STD 2.8.006 CLASS ...

DOVE NON INDICATO A = 0.7 DELLO SPESSORE MINIMO DA COLLEGARE

WHERE NOT INDICATED A = 0.7 OF MINIMUM THICKNESS TO BE WELDED

COMPUTER AIDED DESIGN

Rev.	Date	Revisions description	Drawn by	Checked by	Approved by
00	15 Feb 2017	ISSUED FOR CONSTRUCTION	Khamvong A	Riga E	Pasut N

Material 1 (where not indicated on drawing) State of supply Mat.1 Danieli Supply Std. Supply Class Pattern DB

Material 2 State of supply Mat.2 Danieli Supply Std. Supply Class Casting code

Material 1 Equivalent

Heat Treatment

On Drawing Symbol, if required,

Coating

On Drawing Symbol, if required,

Unquoted radius	Unquoted bevels	Dimensions without tolerance as per	Machinings	Proc.Class	Max.Welding Class
1 (mm)	1x45° (mm)	DANIELI STD 2.4.103	√ √ √ √ √ √ √		A

Project Name

DANIELI CENTRO MET

Job nr

Obtained from 8.515409.B

Replaces

Family code/Machine code PSREBT

Weight (Kg) 1550

J (Kgm²)

Title SAND CHARGING + CAMERA INSTALLATION ASSEMBLY

Scale 1:20

Format A1

DANIELI Shop number 8.807602.H

Revision 00

DANIELI dwg number

Revision

Nr. of sheets 002

Sheet 001

Follow

According to law DANIELI & C.SpA considers this document to be a company secret and therefore prohibits any person to reproduce or disclose it or make it known in whole or in part to other parties or to competitors without specific written authorization of DANIELI's Management

File nr FD12-002-499-245.IDW

CHARGING OF SAND IS AT 4°

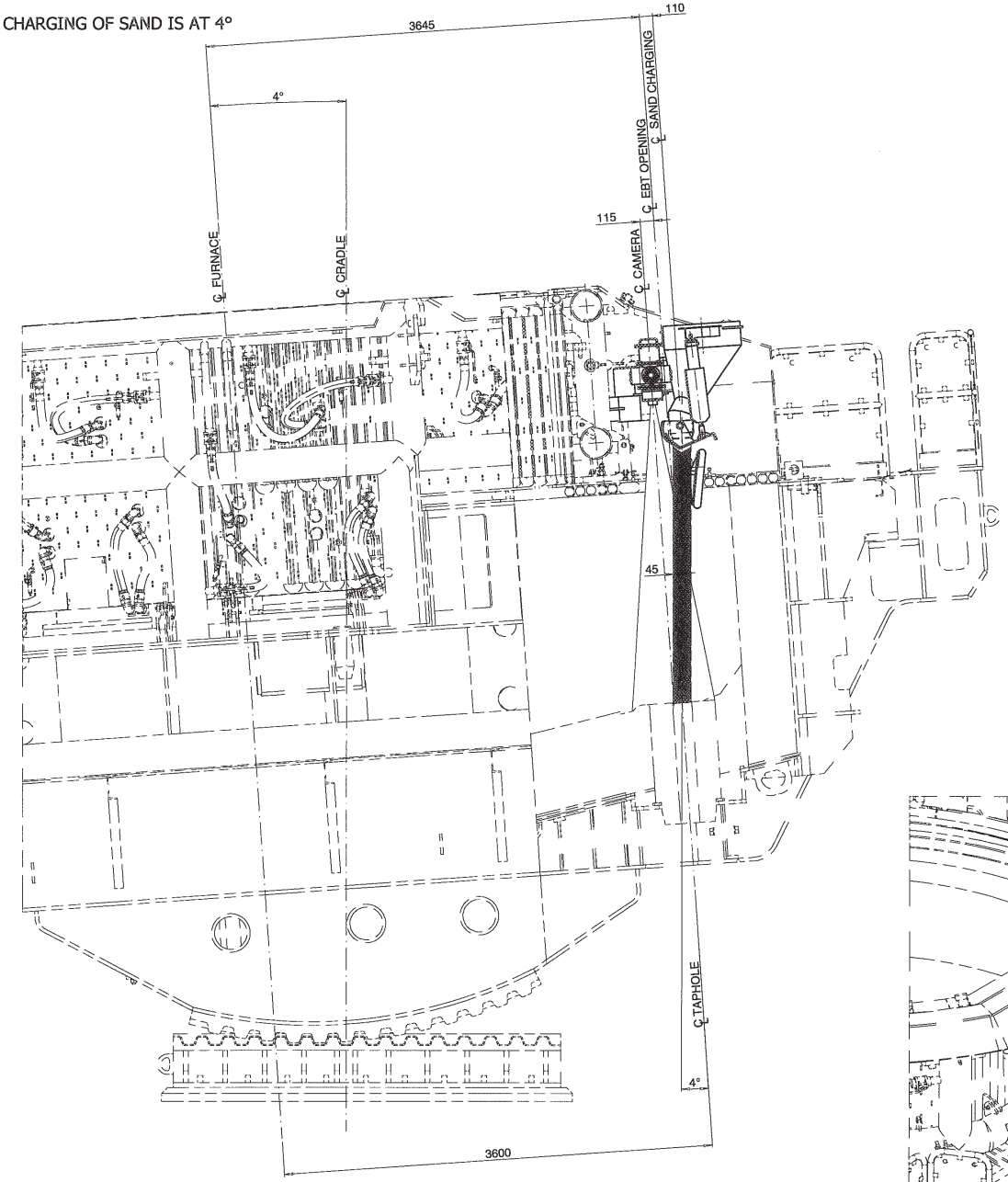

EBT PANEL OPENING (1 : 10)

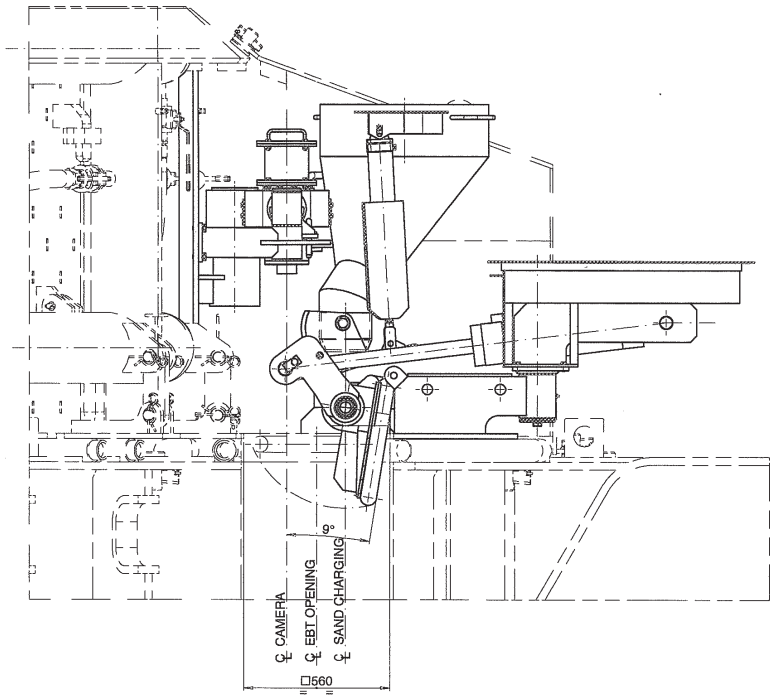

ISOMETRIC VIEW

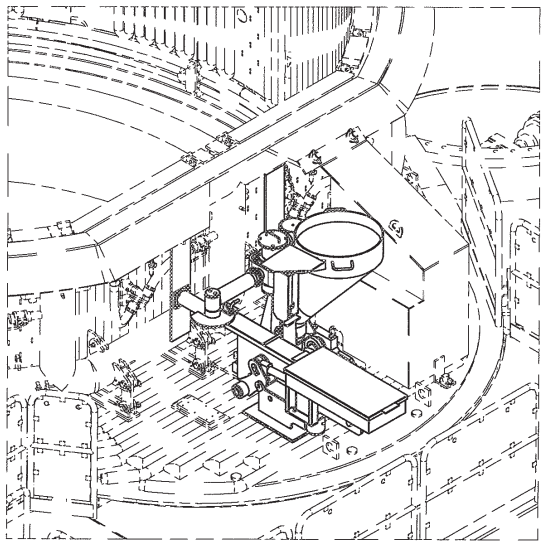

Rev.	Date	Revisions description	Drawn by	Checked by	Approved by
00	15 Feb 2017	ISSUED FOR CONSTRUCTION	Khamsang A	Riga E	Pasut W

Material 1 (where not indicated on drawing) — State of supply Mat.1 — Danieli Supply Std. — Supply Class — Pattern DB

Material 2 — State of supply Mat.2 — Danieli Supply Std. — Supply Class — Casting code

Material 1 Equivalent

Heat Treatment

On Drawing Symbol, if required,

Coating

On Drawing Symbol, if required,

Unquoted radius	Unquoted bevels	Dimensions without tolerance as per	Machinings	Prev.Class	Max.Welding Class
1 (mm)	1x45° (mm)	DANIELI STD 2.4.103	√ / √√√√√√		A

Project Name

DANIELI CENTRO MET

Job nr

Obtained from 8.515409.B

Replaces

Family code/Machine code: PSREBT

Weight (Kg): 1550 — ρ (Kgm⁻³)

Title: SAND CHARGING + CAMERA INSTALLATION ASSEMBLY

Scale: 1:20

Format: A1

DANIELI Shop number: 8.807602.H — Revision: 00

DANIELI dwg number — Revision

Nr. of sheets: 002

Sheet: 002 — Follow

According to law DANIELI & C.SpA considers this document to be a company secret and therefore prohibits any person to reproduce or disclose it or make it known in whole or in part to other parties or to competitors without specific written authorization of DANIELI's Management

File nr FD12-002-499-638.IDW

COMPUTER AIDED DESIGN - 1