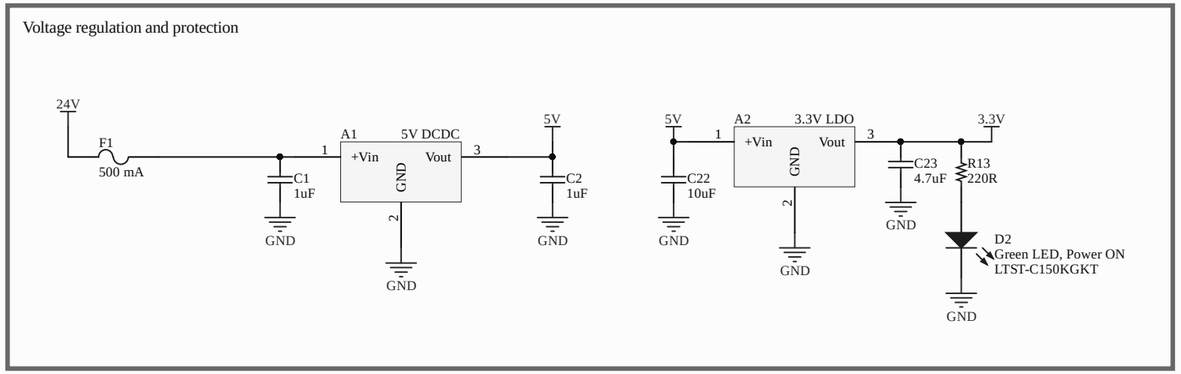

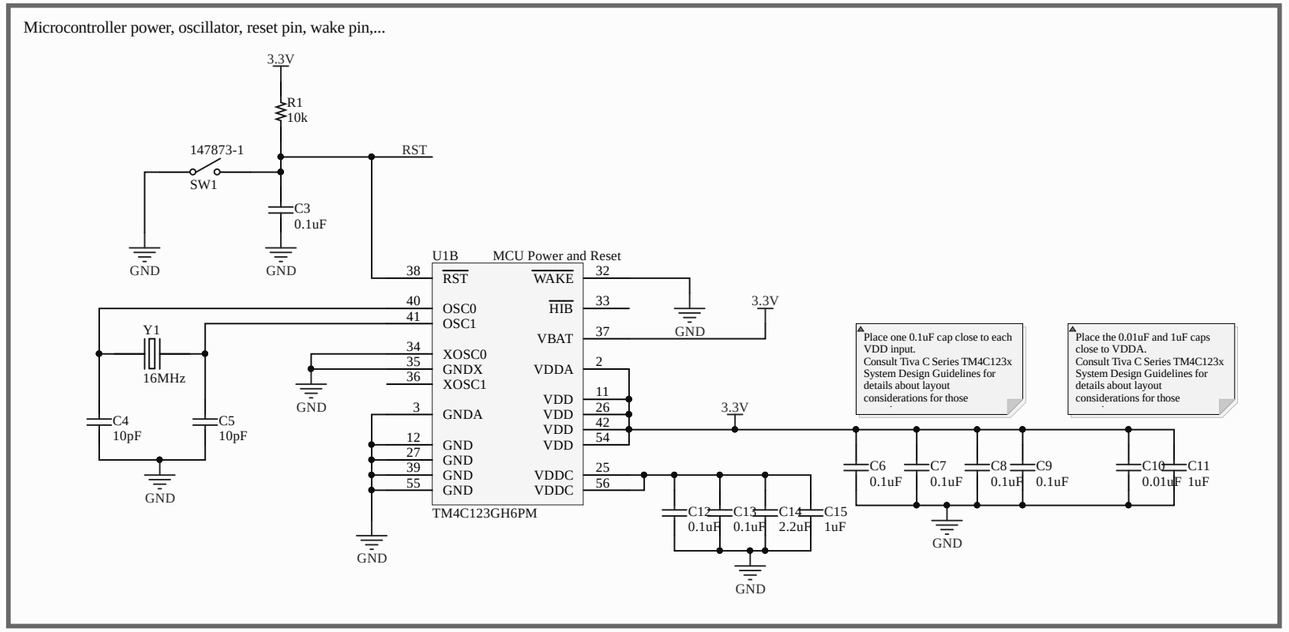

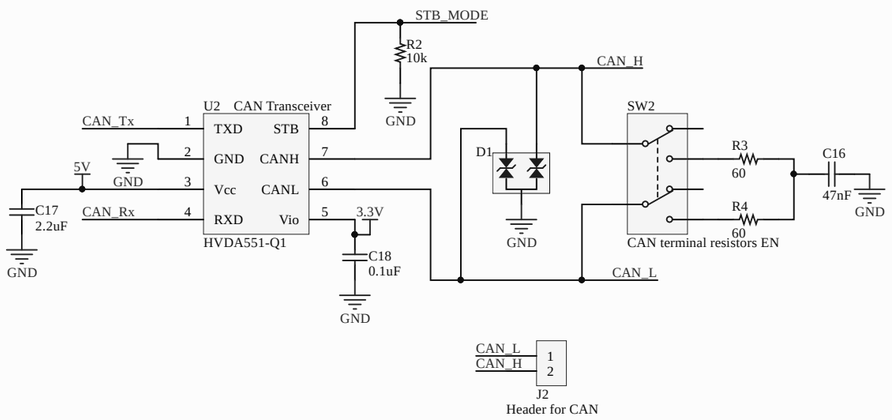

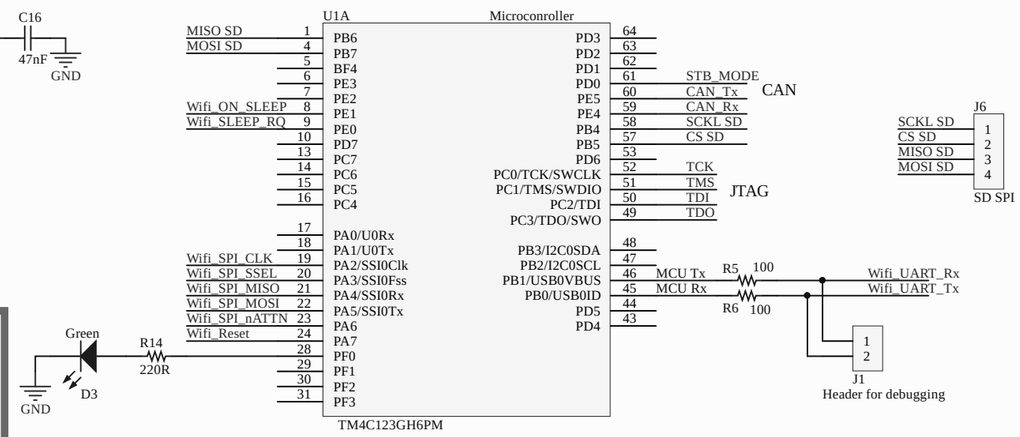

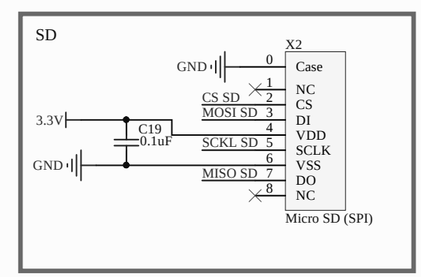

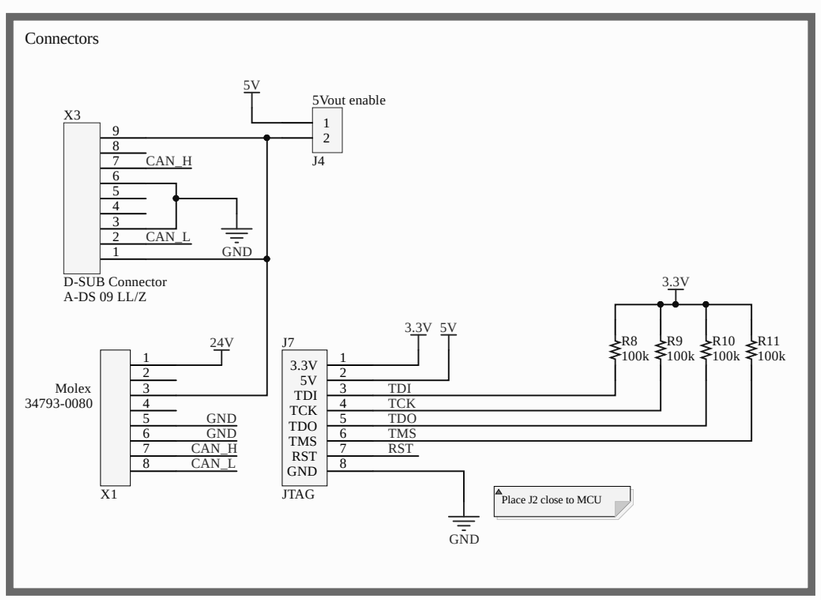

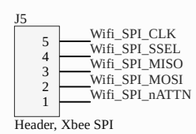

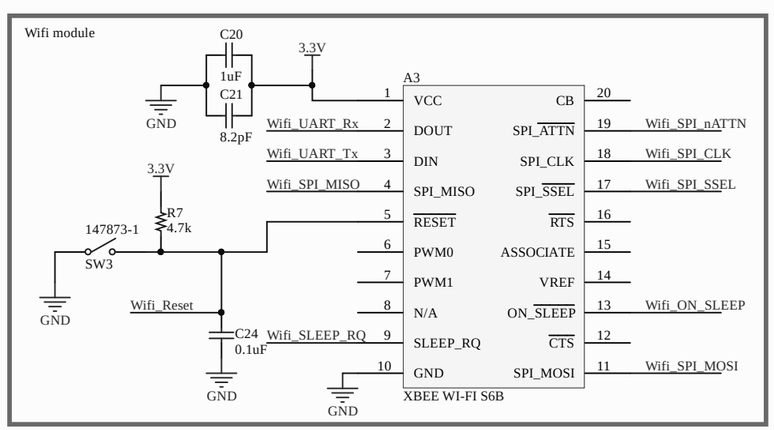

Title: CAN to Wifi Module		
Size: Tabloid	Number	Revision: Rev B
Date: 2017-11-27		Sheet of
File: C:\Poly eRacing Git\..\module_wifi.SchDoc		Drawn By:

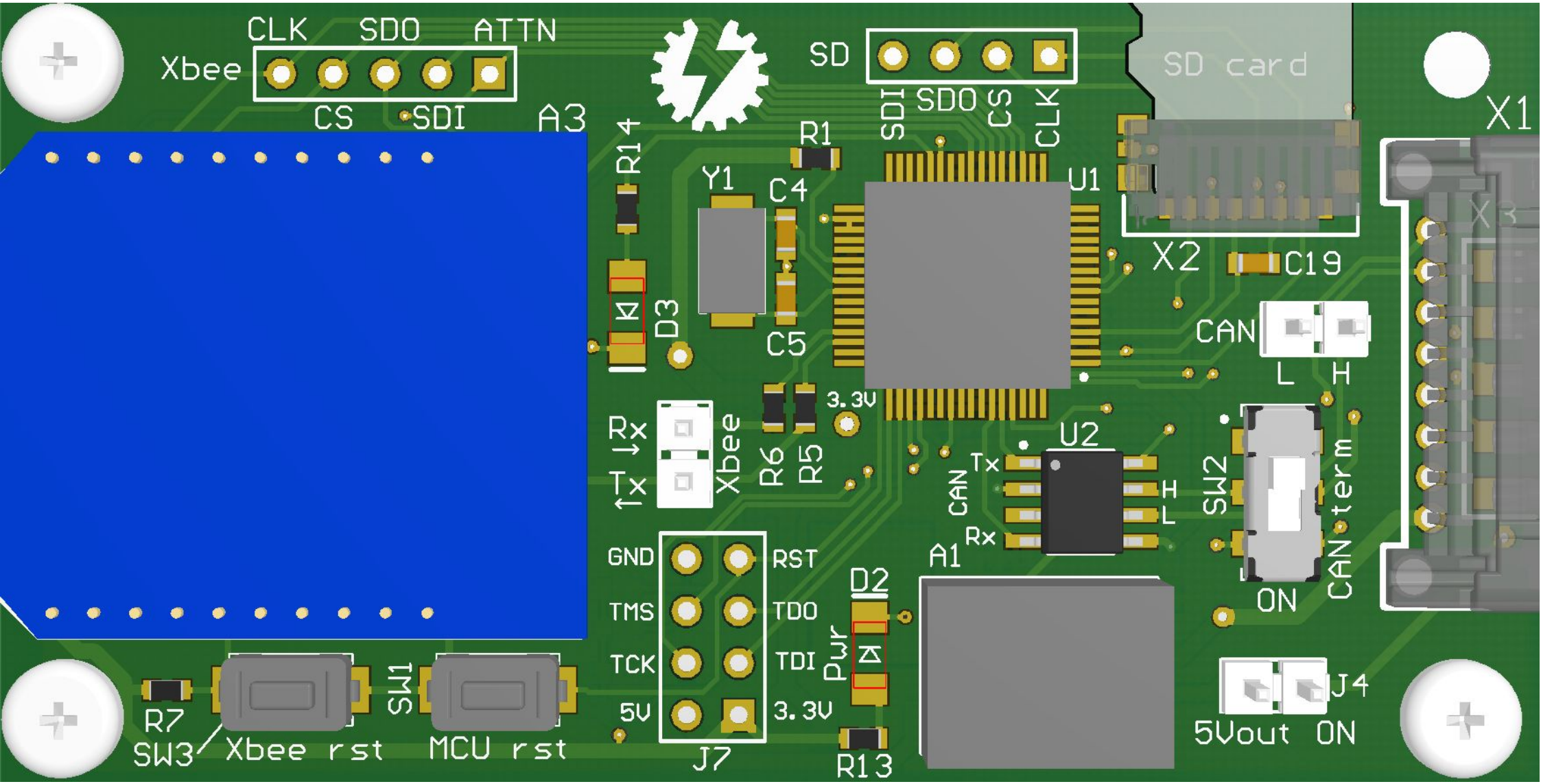
CLK
SDO
ATTN
Xbee
CS
SDI
A3
R14
D3
Y1
C4
C5
R1
SD
SDI
SDO
CS
CLK
U1
SD card
X2
C19
X1
X3
CAN
L
H
3.3V
Rx
Tx
Xbee
R6
R5
U2
Tx
CAN
H
L
Rx
A1
SW2
CAN term
ON
GND
TMS
TCK
5V
RST
TDO
TDI
3.3V
J7
D2
Pwr
R13
R7
SW3
Xbee rst
SW1
MCU rst
J4
5Vout
ON