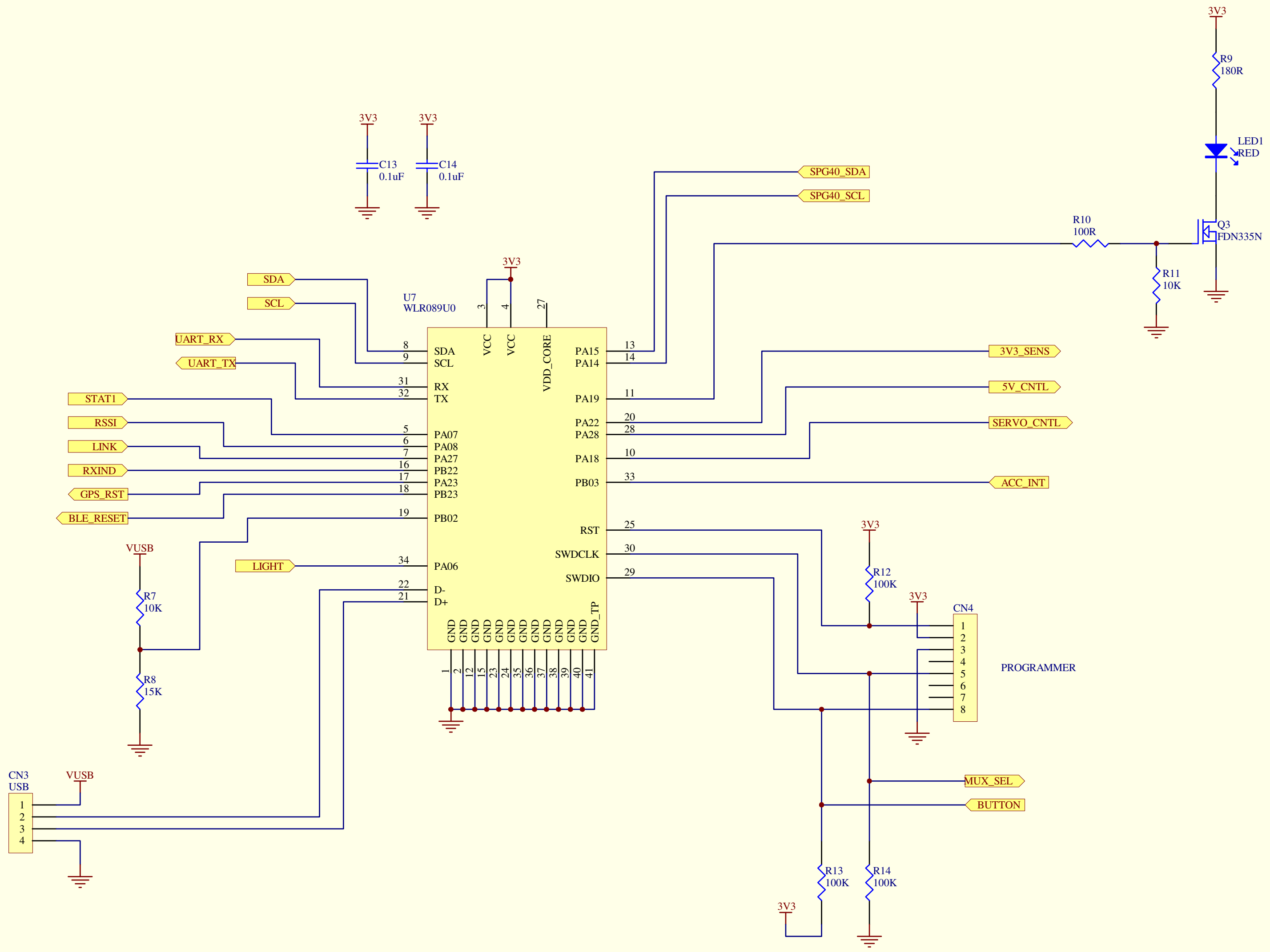
1
2
3
4
5
6
7
8
D
C
B
A
3V3
R9
180R
LED1
RED
3V3
3V3
C13
0.1uF
C14
0.1uF
SPG40_SDA
SPG40_SCL
R10
100R
Q3
FDN335N
R11
10K
3V3
SDA
SCL
U7
WLR089U0
3
4
27
VCC
VCC
VDD_CORE
UART_RX
UART_TX
8 SDA
9 SCL
31 RX
32 TX
13 PA15
14 PA14
11 PA19
3V3_SENS
5V_CNTL
SERVO_CNTL
20 PA22
28 PA28
10 PA18
33 PB03
ACC_INT
STAT1
RSSI
LINK
RXIND
GPS_RST
BLE_RESET
5 PA07
6 PA08
7 PA27
16 PB22
17 PA23
18 PB23
19 PB02
25 RST
30 SWDCLK
29 SWDIO
VUSB
R7
10K
R8
15K
LIGHT
34 PA06
22 D-
21 D+
GND GND GND GND GND GND GND GND GND GND GND GND GND_TP
1 2 12 15 23 24 35 36 37 38 39 40 41
3V3
R12
100K
3V3
CN4
1 2 3 4 5 6 7 8
PROGRAMMER
MUX_SEL
BUTTON
CN3
USB
VUSB
1 2 3 4
R13
100K
R14
100K
3V3

Title

Size
A3

Number

Revision

Date: 12-Apr-2023

Sheet of

File: C:\Customers2018\Murdoch Uni\Files\10048\10048.Ddb

Drawn By: