View from Top side (Scale 2)

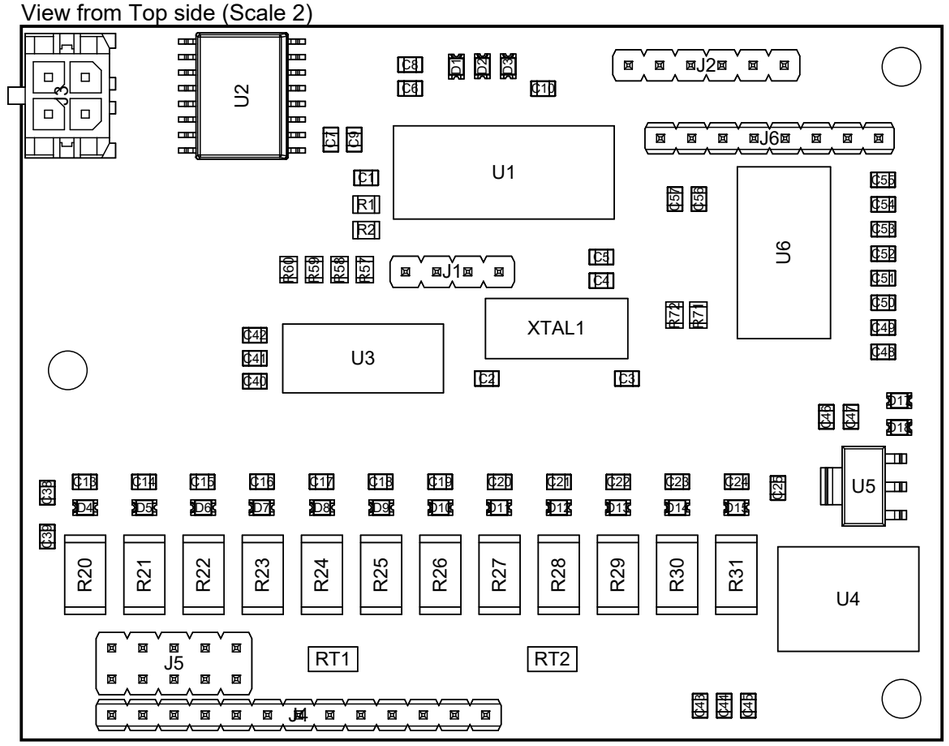

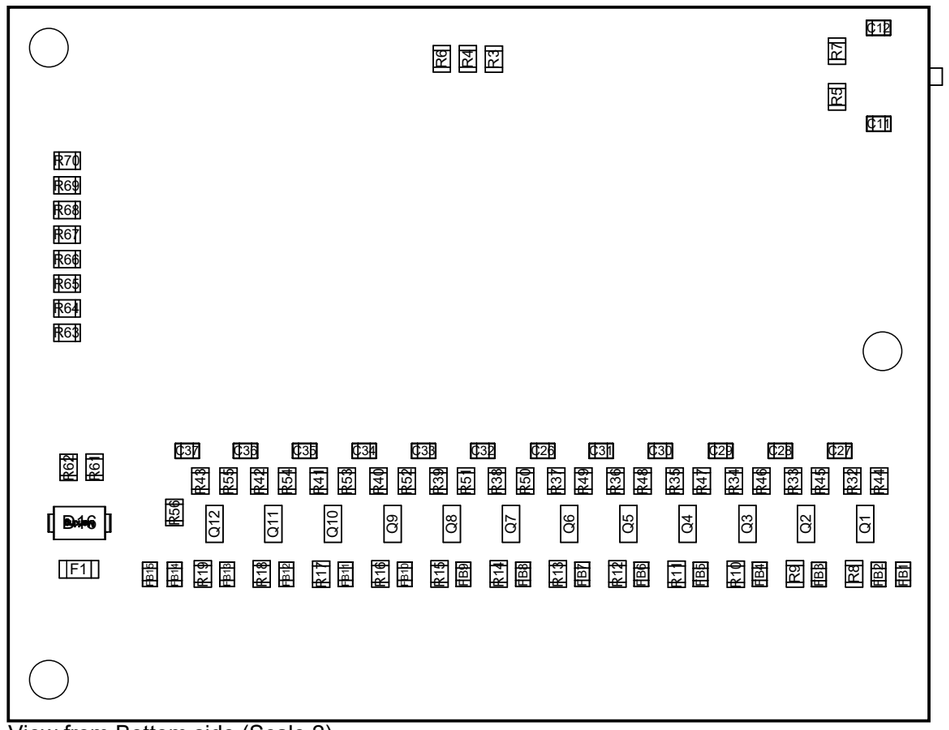

View from Bottom side (Scale 2)

Line #	Designator	Quantity	Comment	Reference	Part Number	PartNumber
1	C1, C12, C47, C48, C49, C50, C51, C52, C53, C54, C55, C56	12	10nF		885012207092	
2	C2, C3	2	15pF		885012007052	
3	C4, C8, C9, C11, C46, C57	6	100nF		885012207098	
4	C5, C6	2	1nF		885012007063	
5	C7, C10	2	10uF		885012107014	
6	C13, C14, C15, C16, C17, C18, C19, C20, C21, C22, C23, C24, C25, C26, C27, C28, C29, C30, C31, C32, C33, C34, C35, C36, C37, C38	26	50V, 10nF		885012207092	
7	C39	1	50V, 100nF		885012207098	
8	C40, C41, C42	3	50V, 1uF		885012207103	
9	C43, C44, C45	3	1uF		885012207103	
10	D1, D2	2	Blue		150080BS75000	
11	D3	1	Red		150080RS75000	
12	D4, D5, D6, D7, D8, D9, D10, D11, D12, D13, D14, D15	12	Yellow		150080YS75000	
13	D16	1	400W, 5V		824501500	
14	D17	1	Green		150080GS75000	
15	D18	1	Bright Green		150080VS75000	
16	F1	1	63 V, 0.5A			
17	FB1, FB2, FB3, FB4, FB5, FB6, FB7, FB8, FB9, FB10, FB11, FB12, FB13, FB14, FB15	15	560 Ohm		782853561	
18	J1	1	61300411121		61300411121	
19	J2	1	61300611121		61300611121	
20	J3	1	43045-0427			
21	J4	1	61301311121		61301311121	
22	J5	1	61301021121		61301021121	
23	J6	1	61300811121		61300811121	
24	Q1, Q2, Q3, Q4, Q5, Q6, Q7, Q8, Q9, Q10, Q11, Q12	12	BSS308PE			BSS308PE
25	R1, R63, R64, R65, R66, R67, R68, R69, R70	9	10kΩ			
26	R2, R44, R45, R46, R47, R48, R49, R50, R51, R52, R53, R54, R55, R56	14	100Ω			
27	R3, R4, R6, R8, R9, R10, R11, R12, R13, R14, R15, R16, R17, R18, R19, R61, R62	17	470Ω			
28	R5, R7	2	60.4Ω			
29	R20, R21, R22, R23, R24, R25, R26, R27, R28, R29, R30, R31	12	2W, 15Ω			
30	R32, R33, R34, R35, R36, R37, R38, R39, R40, R41, R42, R43	12	1kΩ			
31	R57, R58, R59, R60, R71, R72	6	4.7kΩ			
32	RT1, RT2	2	10kΩ	NXRT15XV103FA1B040		
33	U1	1	PIC24HJ128GP502			
34	U2	1	ISO1050DW			
35	U3	1	LTC6811-2			
36	U4	1	R-78HB5.0-0.5 / 173010542			
37	U5	1	1.5 - 13.8 Vin, 3.3 Vout	LM1117-3.3		
38	U6	1	LTC1296			
39	XTAL1	1	20MHz			