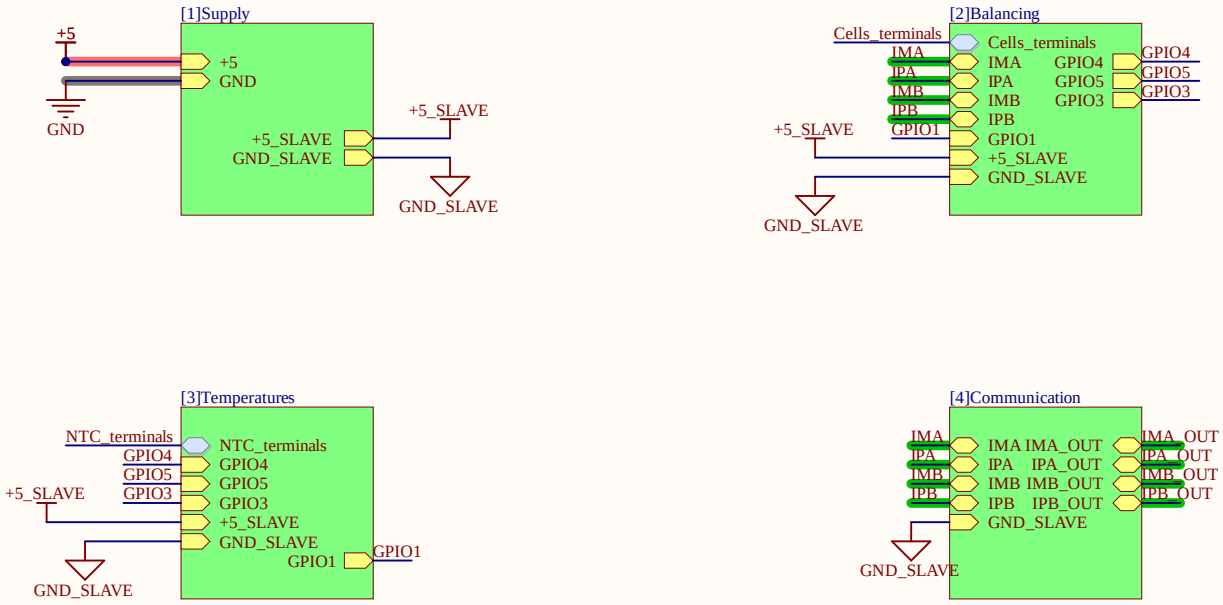

The design of the schematics of this board is mainly based on the LTC6811 datasheet, for more information refer to it.

TS Connectors

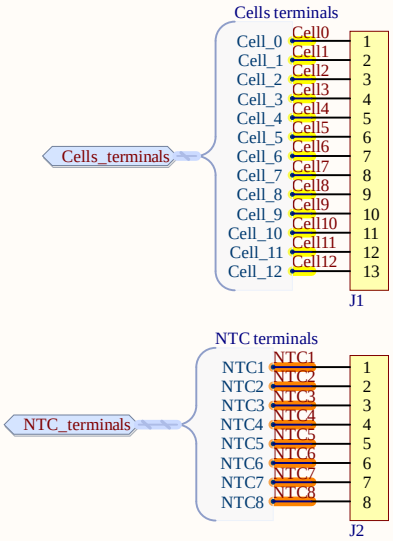

LV Connectors

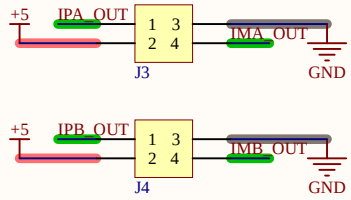

Company: e-Tech Racing	www.e-techracing.es		
Project: AMS Slave	Variant: [No Variations]		
Size: -	Page Contents: SLAVE_HW.SchDoc	Version: 1	
		Department: PCBs	
Author: Andreu Senis	andreu.senis@estudiantat.upc.edu	Sheet 1 of 5	
Checked by:		Date: 02/11/2023	

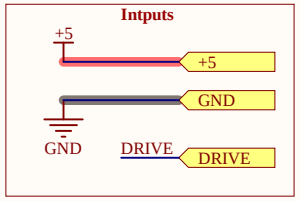

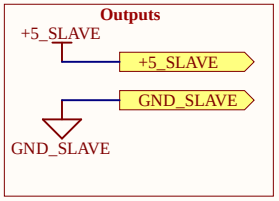

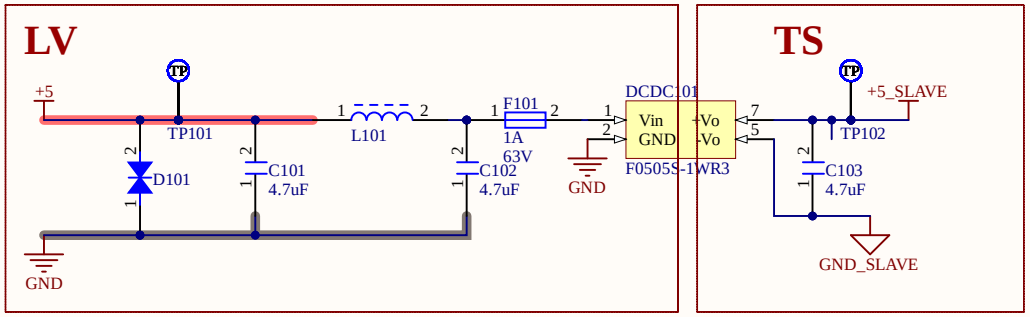

TS and LV must be separated by 12.7 mm over surface

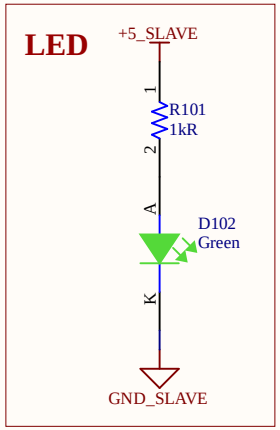

Overlay: D102 is the +5V supply indicator

Company: e-Tech Racing	www.e-techracing.es		
Project: AMS Slave	Variant: [No Variations]		
Size: -	Page Contents: [1]Supply.SchDoc	Version: 1	
		Department: PCBs	
Author: Andreu Senis	andreu.senis@estudiantat.upc.edu	Sheet 2 of 5	
Checked by:		Date: 02/11/2023	

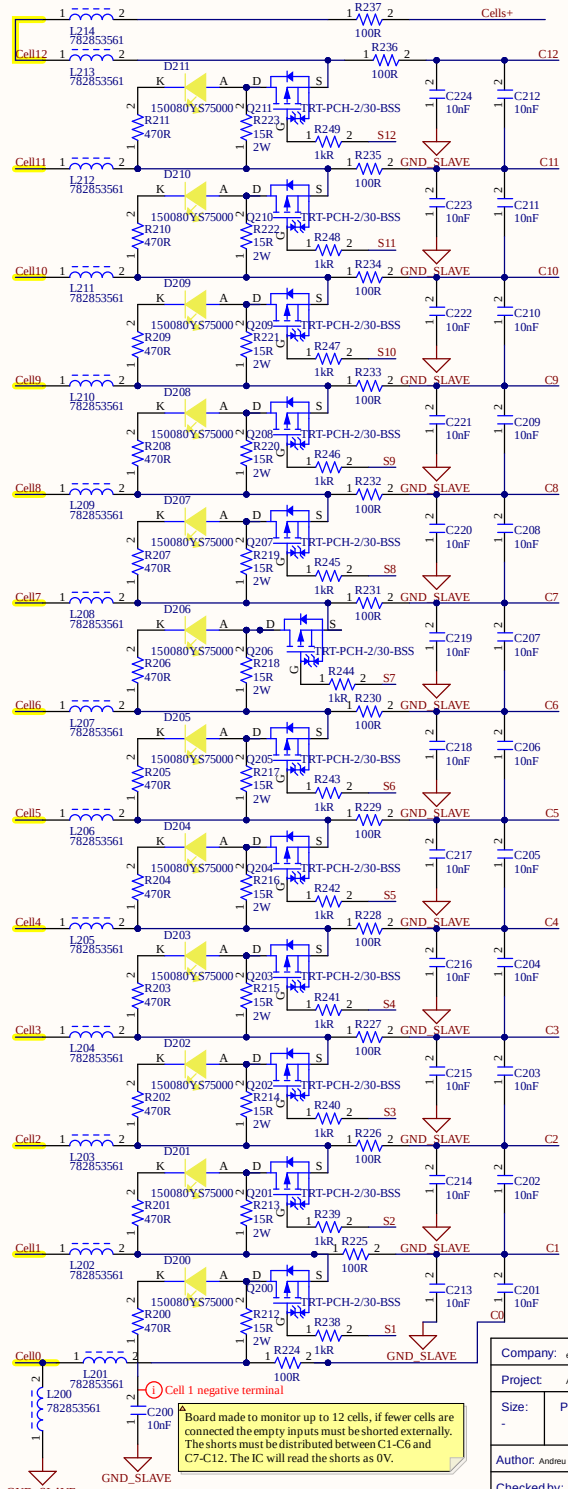

Board made to monitor up to 12 cells, if fewer cells are connected the empty inputs must be shorted externally. The shorts must be distributed between C1-C6 and C7-C12. The IC will read the shorts as 0V.

Cell monitor IC

U201

Cells_+	1	V+	IPB	48	IPB
C12	2	C12	IMB	47	IMB
S12	3	S12	ICMP	46	ICMP
C11	4	C11	IBIAS	45	IBIAS
S11	5	S11	SDO (NC)	44	
C10	6	C10	SDI (NC)	43	
S10	7	S10	SCK (IPA)	42	IPA
C9	8	C9	CSB (IMA)	41	IMA
S9	9	S9	ISOMD	40	ISOMD
C8	10	C8	WDT	39	
S8	11	S8	DRIVE	38	DRIVE
C7	12	C7	Vreg	37	Vreg
S7	13	S7	DTEN	36	DTEN
C6	14	C6	Vref1	35	Vref1
S6	15	S6	Vref2	34	Vref2
C5	16	C5	GPIO5	33	GPIO5
S5	17	S5	GPIO4	32	GPIO4
C4	18	C4	V-	31	V-
S4	19	S4	V-**	30	V-**
C3	20	C3	GPIO3	29	GPIO3
S3	21	S3	GPIO2	28	
C2	22	C2	GPIO1	27	GPIO1
S2	23	S2	C0	26	C0
C1	24	C1	S1	25	S1

LTC6811-1

Outputs

IPB, IMB, IPA, IMA, Vref2, GPIO3, GPIO4, GPIO5, DRIVE

Inputs

GPIO1

Cells terminals: Cell_12, Cell_11, Cell_10, Cell_9, Cell_8, Cell_7, Cell_6, Cell_5, Cell_4, Cell_3, Cell_2, Cell_1, Cell_0

Cell 1 negative terminal

+5_SLAVE

GND_SLAVE

Settings

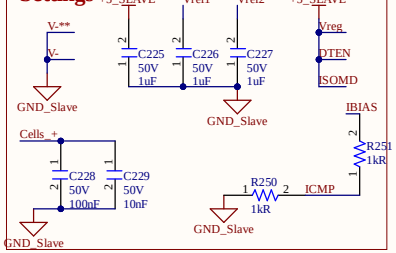

Company: e-Tech Racing	www.e-techracing.es		
Project: AMS Slave	Variant: [No Variations]		
Size: -	Page Contents: [2]Balancing.SchDoc	Version: 1	
		Department: PCBs	
Author: Andreu Senis	andreu.senis@estudiantat.upc.edu	Sheet 3 of 5	
Checked by:		Date: 02/11/2023	

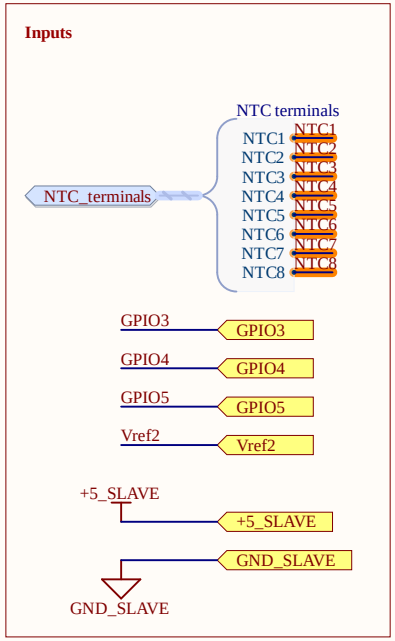

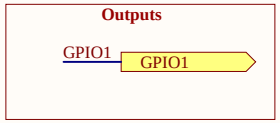

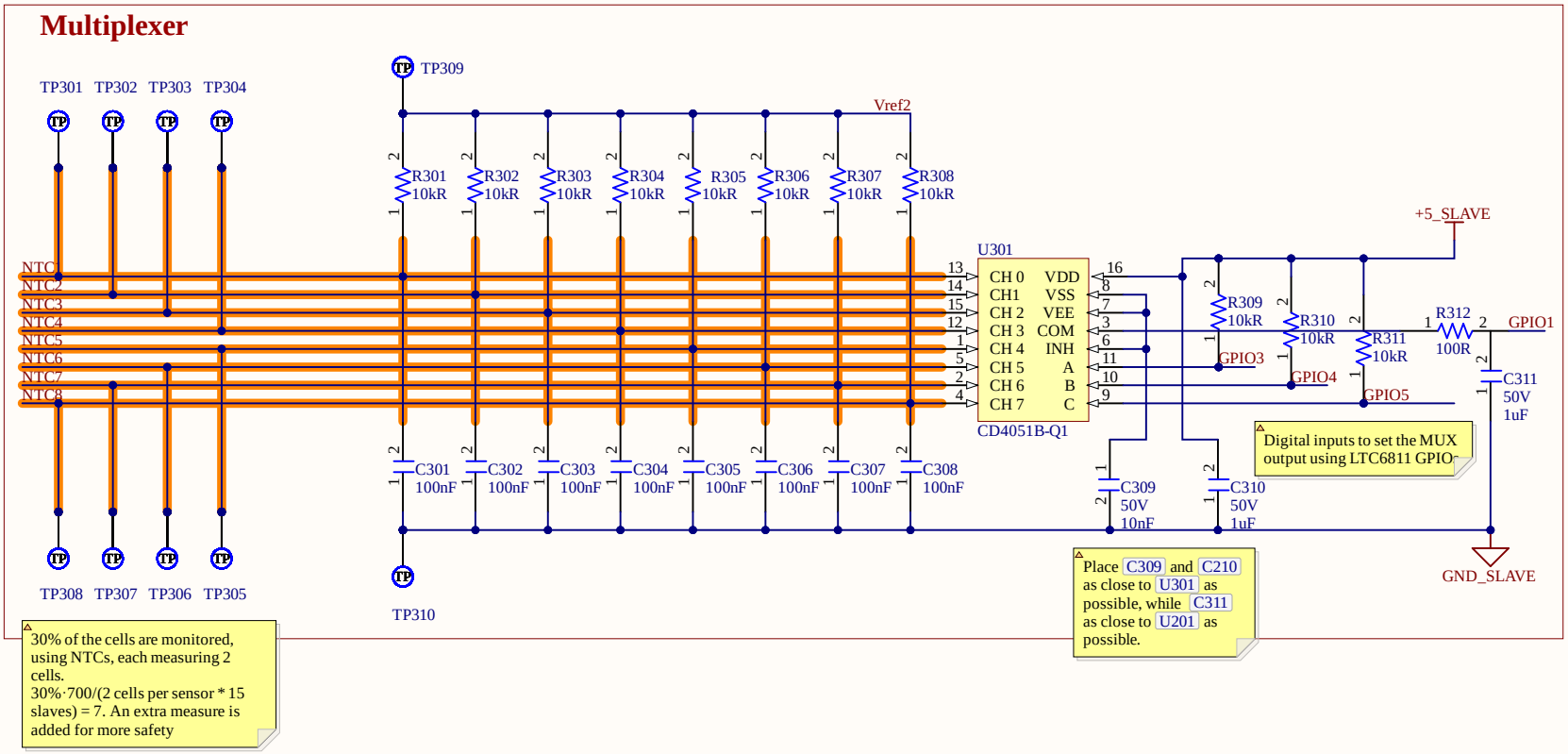

Company: e-Tech Racing	www.e-techracing.es		
Project: AMS Slave	Variant: [No Variations]		
Size: -	Page Contents: [3]Temperatures.SchDoc	Version: 1	
		Department: PCBs	
Author: Andreu Senis	andreu.senis@estudiantat.upc.edu	Sheet 4 of 5	
Checked by:		Date: 02/11/2023	

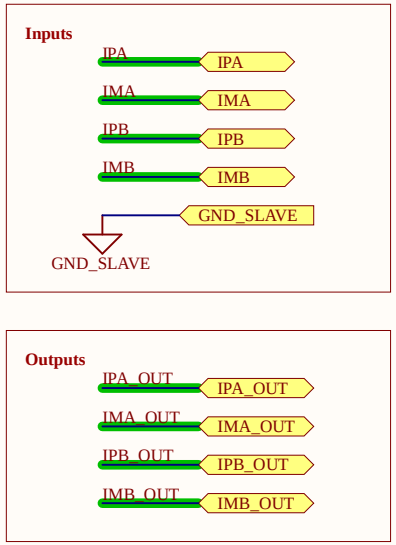

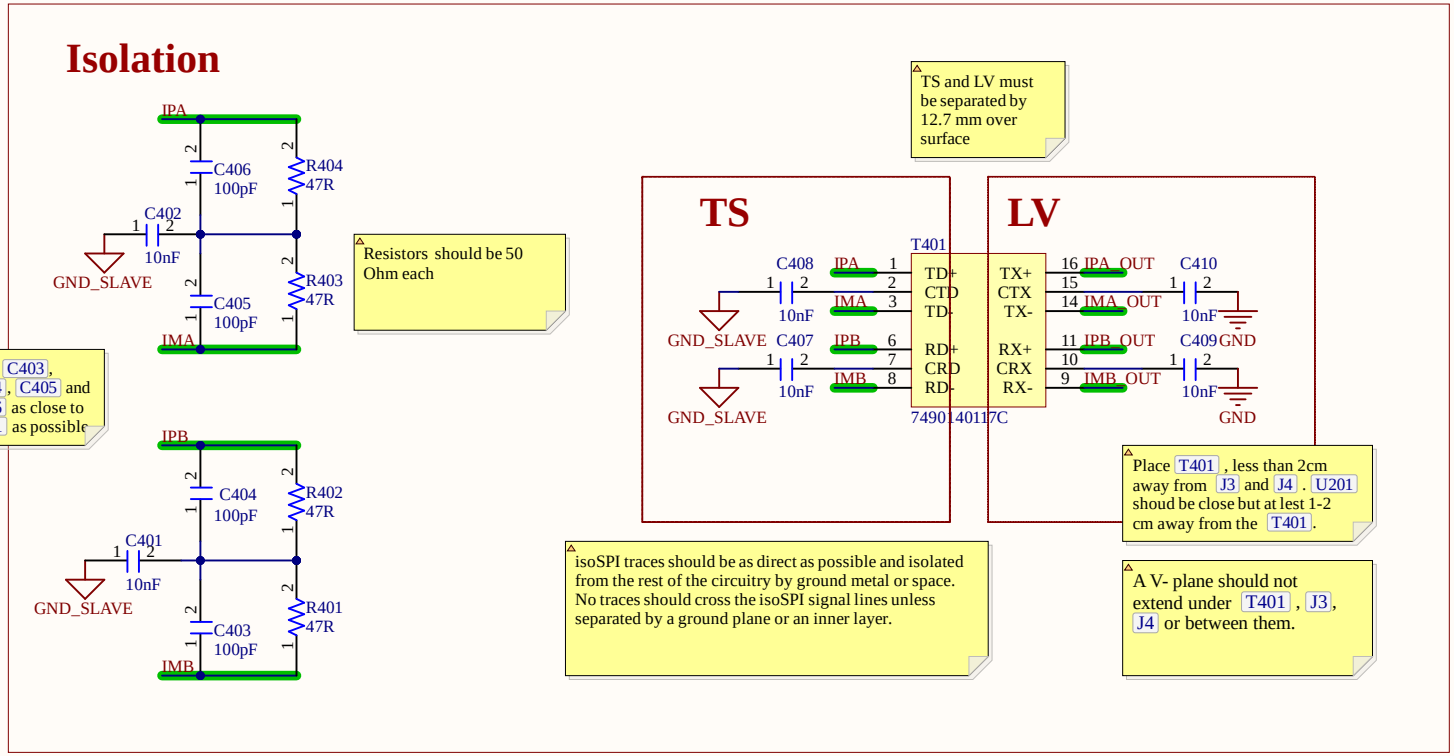

Company: e-Tech Racing	www.e-techracing.es		
Project: AMS Slave	Variant: [No Variations]		
Size: -	Page Contents: [4]Communication.SchDoc	Version: 1	
		Department: PCBs	
Author: Andreu Senis	andreu.senis@estudiantat.upc.edu	Sheet 5 of 5	
Checked by:		Date: 02/11/2023	