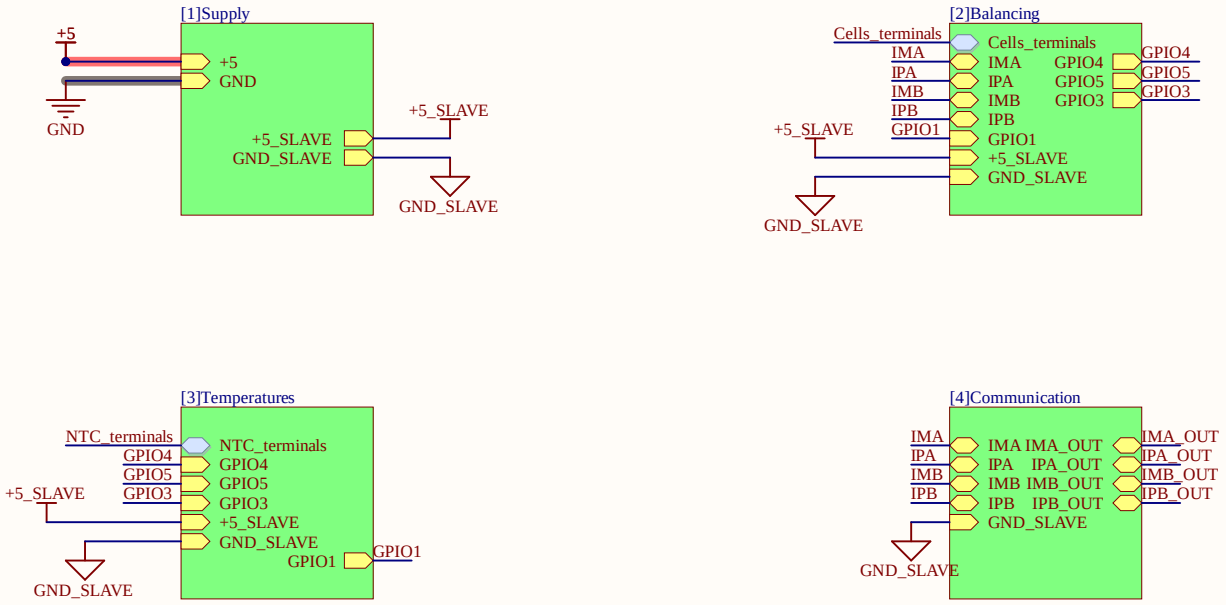

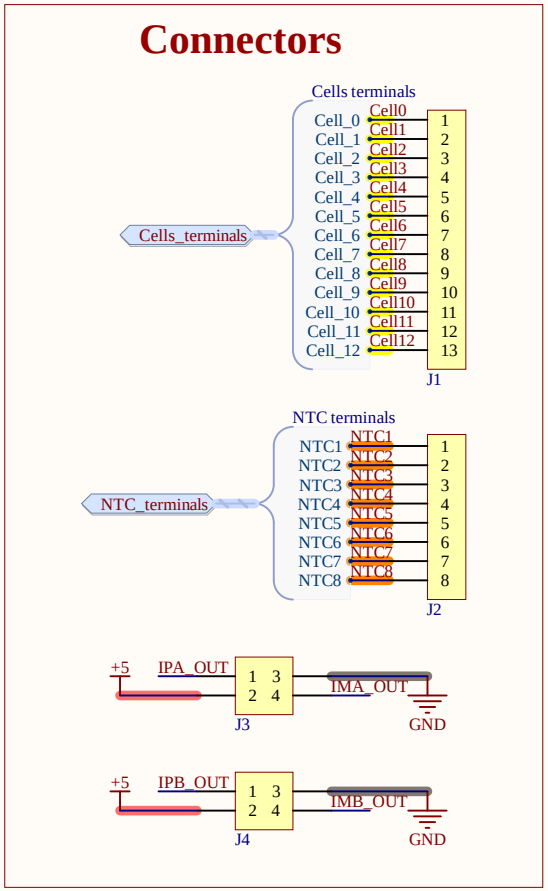

Company: e-Tech Racing	www.e-techracing.es		
Project: AMS Slave	Variant: [No Variations]		
Size: -	Page Contents: SLAVE_HW.SchDoc	Version: 1	
		Department: PCBs	
Author: Andreu Senis	andreu.senis@estudiantat.upc.edu	Sheet 1 of 5	
Checked by:		Date: 31/10/2023	

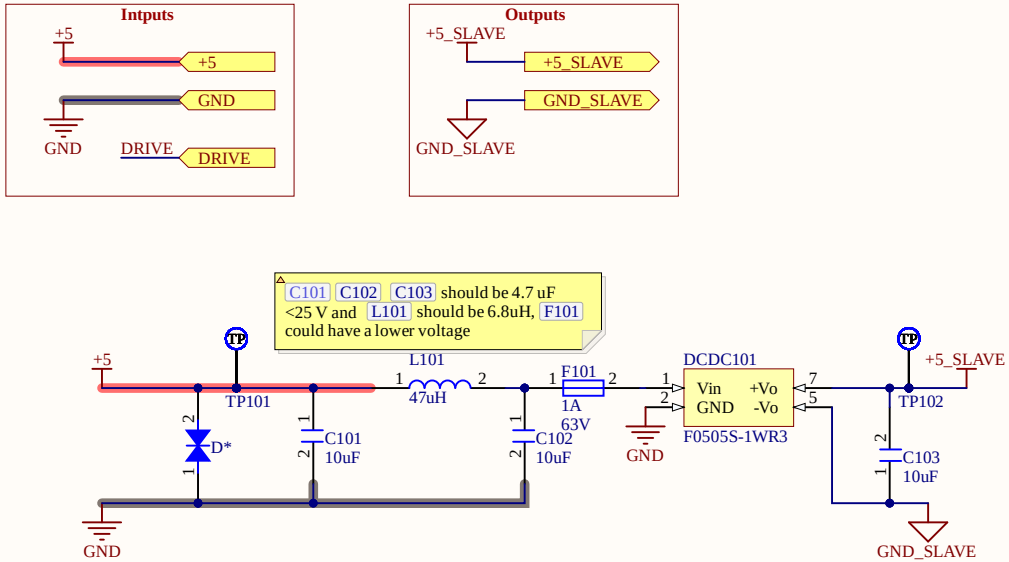

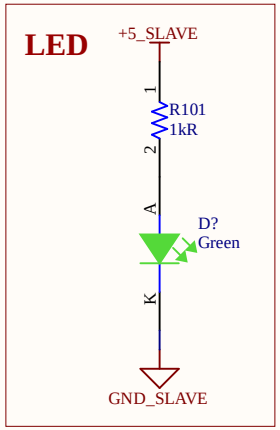

Company: e-Tech Racing	www.e-techracing.es		
Project: AMS Slave	Variant: [No Variations]		
Size: -	Page Contents: [1]Supply.SchDoc	Version: 1	
		Department: PCBs	
Author: Andreu Senis	andreu.senis@estudiantat.upc.edu	Sheet 2 of 5	
Checked by:		Date: 31/10/2023	

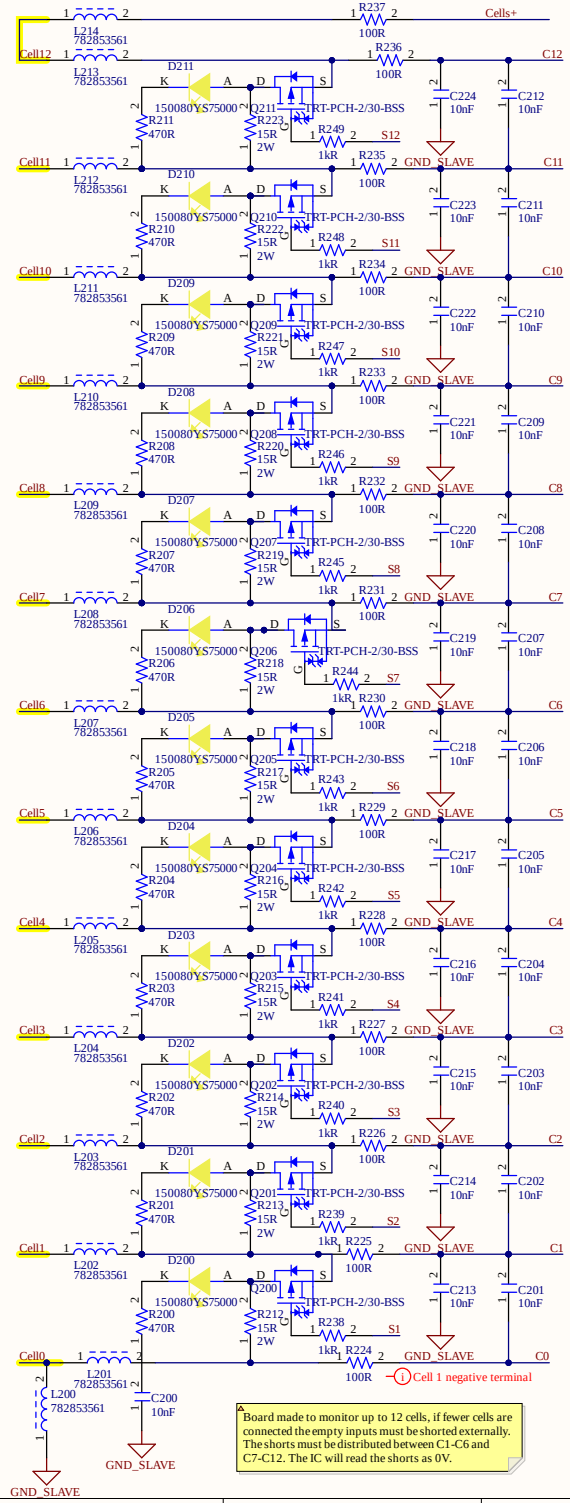

Board made to monitor up to 12 cells, if fewer cells are connected the empty inputs must be shorted externally. The shorts must be distributed between C1-C6 and C7-C12. The IC will read the shorts as 0V.

Cell monitor IC

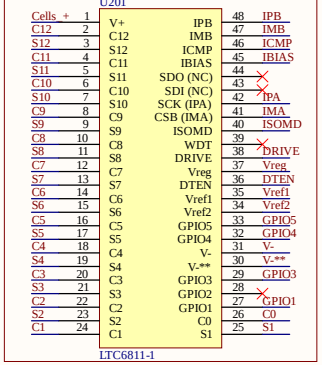

Outputs

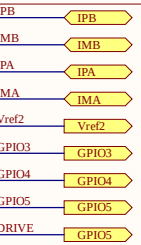

Inputs

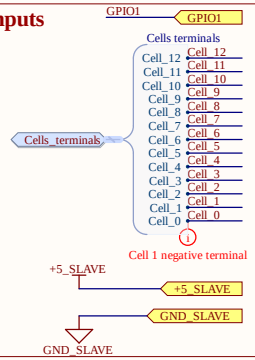

Settings

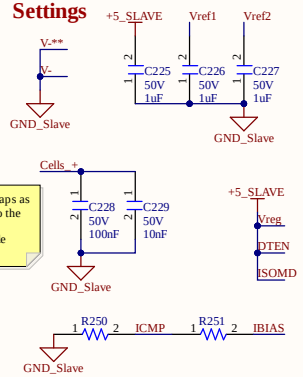

Place caps as close to the IC as possible

Bias resistors to set the isoSPI current and to set the recieving voltage treshold

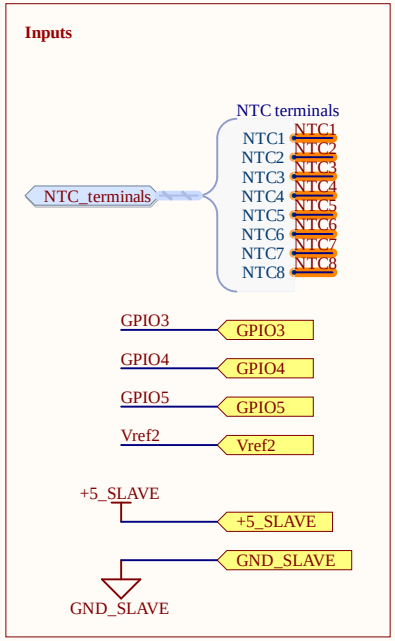

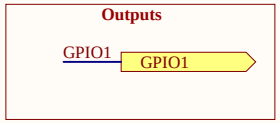

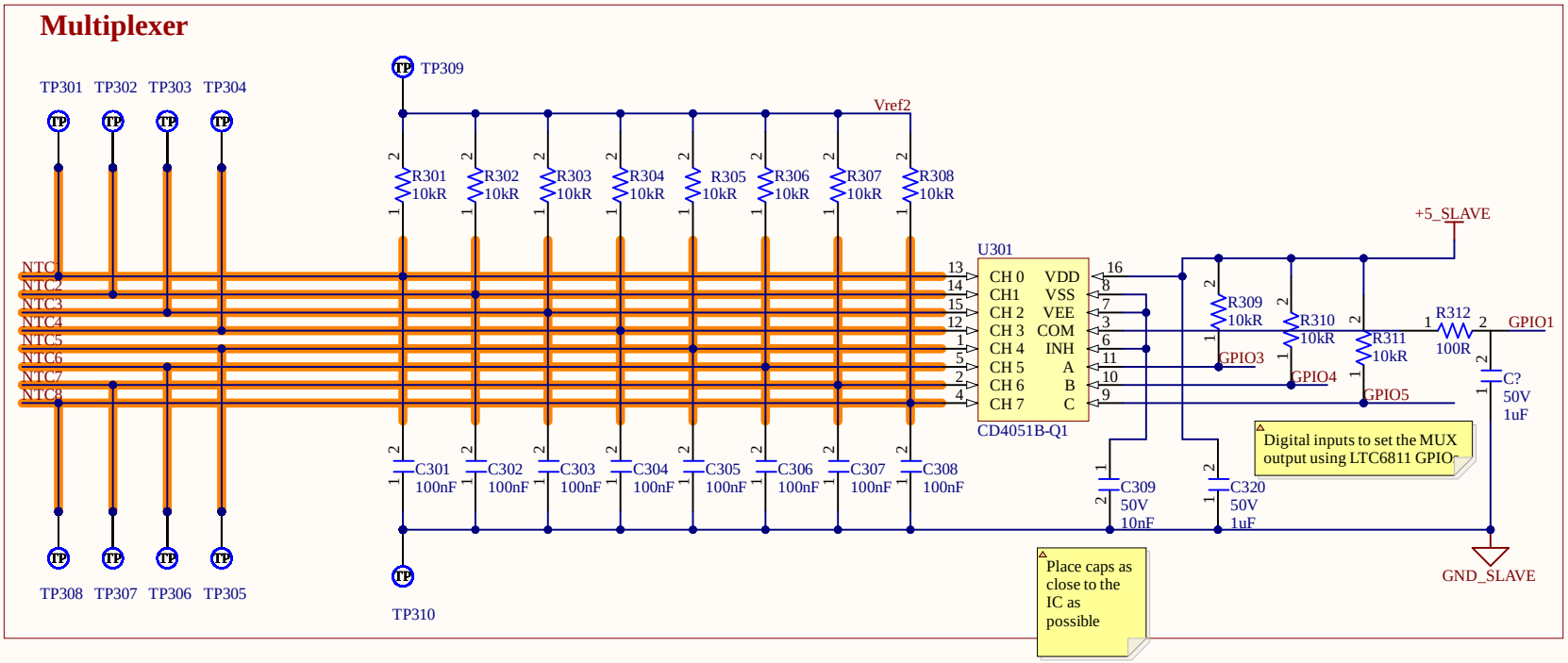

30% of the cells are monitored, using NTCs, each measuring 2 cells

Company: e-Tech Racing	www.e-techracing.es		
Project: AMS Slave	Variant: [No Variations]		
Size: -	Page Contents: [3]Temperatures.SchDoc	Version: 1	
		Department: PCBs	
Author: Andreu Senis	andreu.senis@estudiantat.upc.edu	Sheet 4 of 5	
Checked by:		Date: 31/10/2023	

Inputs

IPA — IPA
IMA — IMA
IPB — IPB
IMB — IMB
GND_SLAVE — GND_SLAVE

Outputs

IPA_OUT — IPA_OUT
IMA_OUT — IMA_OUT
IPB_OUT — IPB_OUT
IMB_OUT — IMB_OUT

Isolation

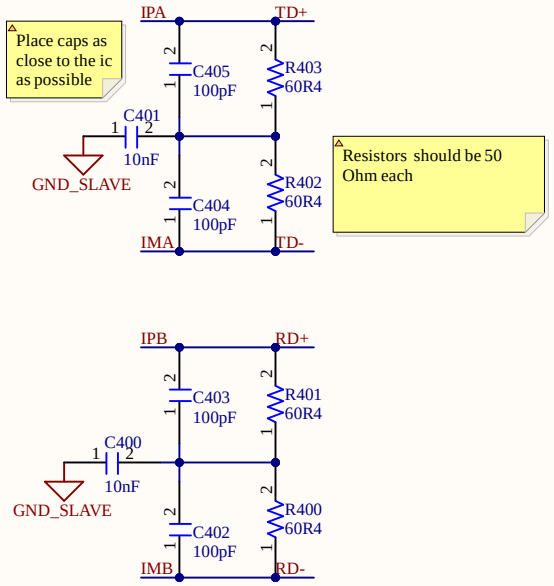

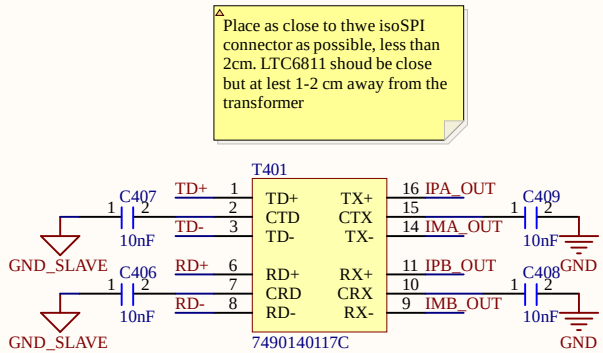

A V- plane should not extend under the transformer, the isoSPI connector on between them.

isoSPI traces as direct as possible and isolated from the rest of the circuitry by ground metal or space. No traces should cross the isoSPI signal lines, no traces should cross them unless separated by a

Company: e-Tech Racing	www.e-techracing.es		
Project: AMS Slave	Variant: [No Variations]		
Size: -	Page Contents: [4]Communication.SchDoc	Version: 1	
		Department: PCBs	
Author: Andreu Senis	andreu.senis@estudiantat.upc.edu	Sheet 5 of 5	
Checked by:		Date: 31/10/2023	

Comment	Description	Designator	Footprint	LibRef	Quantity
10uF		C101, C102	C0805FNPC-W	C10uF-50V-0805FNPC	2
GRJ32ER71H106KE11L	Multilayer Ceramic Capacitors MLCC - SMD/SMT 1210 10uF 50volts X7R +/-10% Soft Term	C103	C10u-50V-1210FNPMLCC-X7R	C10u-50V-1210FNPMLCC-X7R	1
885012207092	Cap, 0.01MF, 50V, 10%, X7R, 0805	C200, C201, C202, C203, C204, C205, C206, C207, C208, C209, C210, C211, C212, C213, C214, C215, C216, C217, C218, C219, C220, C221, C222, C223, C224, C229, C309, C400, C401, C406, C407, C408, C409	C0805FNPC-R	C10n-50V-0805FNPC-X7R	33
885012207103	Multilayer Ceramic Capacitor, Wcap-Csgp Series, 1 F, 10%, X7R, 50 V, 0805 [2012 Metric] Rohs Compliant: Yes	C225, C226, C227, C320, C?	C0805FNPC-R	C1u-50V-0805FNPC-X7R	5
885012207098	Cap, 0.1MF, 50V, 10%, X7R, 0805	C228, C301, C302, C303, C304, C305, C306, C307, C308	C0805FNPC-R	C100n-50V-0805FNPC-X7R	9
885012007057	Multilayer Ceramic Capacitor, Wcap-Csgp Series, 100 Pf, 5%, C0G / Np0, 50 V, 0805 [2012 Metric] Rohs Compliant: Yes	C402, C403, C404, C405	C0805FNPC-W	C100p-50V-0805FNPC-C0G/NP0	4
150080YS75000	2 V Yellow LED 2012 (0805) SMD, Wurth Elektronik WL-SMCW 150080YS75000	D200, D201, D202, D203, D204, D205, D206, D207, D208, D209, D210, D211	LED_0805_WE	LEDYS-0805-120	12
824501600	TVS diode [Würth Elektronik] 824501600 TVS diode	D*	DTVS-DO-214AC	DTVS-6V-DO-214AC	1
150080GS75000	Led, Green, 520 Nm, 3.2 V, 30 Ma, 450 Mcd Rohs Compliant: Yes	D?	LED_0805_WE	LEDGS-0805-450	1
F0505S-1WR3		DCDC101	F_S-1WR3	DCDC-5V/5V-0.2A	1
0437001.WRA	Fuse Chip Fast Acting 1A 63V SMD Solder Pad 1206 Ceramic T/R Automotive	F101	Fuse_1206	Fuse_1A_63V_1206	1
61301211121	THT Vertical Pin Header WR-PHD, Pitch 2.54 mm, Single Row, 13 pins	J1	J_Pinheader_1x13	J_Pinheader_1x13	1
61301211121	THT Vertical Pin Header WR-PHD, Pitch 2.54 mm, Single Row, 12 pins	J2	J_Pinheader_1x8	J_Pinheader_1x8	1
J_NanoFit_2x2	Conn Nano-Fit Power HDR 4 POS 2.5mm Solder ST Through Hole 4 Terminal Single Port Tray	J3, J4	J_NanoFit_2x2_v	J_NanoFit_2x2	2
47uH	Inductor Power Unshielded Wirewound 47uH 10% 100KHz Ferrite 490mA 546mOhm DCR T/R	L101	L_47u-490mA_CF	L_47u-490mA_CF	1
782853561		L200, L201, L202, L203, L204, L205, L206, L207, L208, L209, L210, L211, L212, L213, L214	L_Ferrite_bead_0805	L_Ferrite_bead_782853561	15
TRT-PCH-2/30-BSS	Infineon's highly innovative OptiMOS™ families include p-channel power MOSFETs, SOT-23-3, RoHS	Q200, Q201, Q202, Q203, Q204, Q205, Q206, Q207, Q208, Q209, Q210, Q211	TRT-PCH-2/30-BSS	TRT-PCH-2/30-BSS	12
CR0805-JW-102ELF	Res Thick Film 0805 1K Ohm 5% 1/8W ±200ppm/°C Molded SMD SMD Paper Tape on Plastic Reel	R101, R238, R239, R240, R241, R242, R243, R244, R245, R246, R247, R248, R249	R0805FTK	R1k-0805FTK	13
CR0805-FX-4700GLF	Res Thick Film 0805 470 Ohm 1% 1/8W ±100ppm/°C Molded SMD SMD Paper Tape on Plastic Reel	R200, R201, R202, R203, R204, R205, R206, R207, R208, R209, R210, R211	R0805FTK	R470-0805FTK	12
352115RFT	Res Thick Film 2512 15 Ohm 1% 2W ±100ppm/C Pad SMD T/R	R212, R213, R214, R215, R216, R217, R218, R219, R220, R221, R222, R223	R2512FTK	R15-2512FTK	12
CR0805-FX-1000ELF	Res Thick Film 0805 100 Ohm 1% 1/8W ±100ppm/°C Molded SMD SMD Paper Tape on Plastic Reel	R224, R225, R226, R227, R228, R229, R230, R231, R232, R233, R234, R235, R236, R237, R312	R0805FTK	R100-0805FTK	15
ERJ-8GEYJ112V	Res Thick Film 1206 1.1K Ohm 5% 0.25W ±200ppm/°C Molded SMD Punched Carrier T/R	R250, R251	R1206FTK-W	R1k1-1206FTK	2
CR0805-JW-103ELF	BOURNS CR0805-JW-103ELF Surface Mount Chip Resistor, Thick Film, CR Series, 10 kohm, 125 mW, 5%, 150 V	R301, R302, R303, R304, R305, R306, R307, R308, R309, R310, R311	R0805FTK	R10k-0805FTK	11
R60-0805FTN	Res Thin Film 0805 60.4 Ohm 0.1% 1/8W ±25ppm/°C Molded SMD SMD Punched Carrier T/R	R400, R401, R402, R403	R0805FTK	R60-0805FTN	4
7490140117C		T401	7490140117C	TFMR_7490140117C	1
LTC6811-1	Sc-Automotive Multicell Battery Stack Monitor With Addressable Isospi Interface	U201	U_LTC6811G-2	U_LTC6811-1	1
CD4051B-Q1	CD4053B-Q1 Automotive Cmos Tripl	U301	CD4051B-Q1	CD4051B-Q1	1