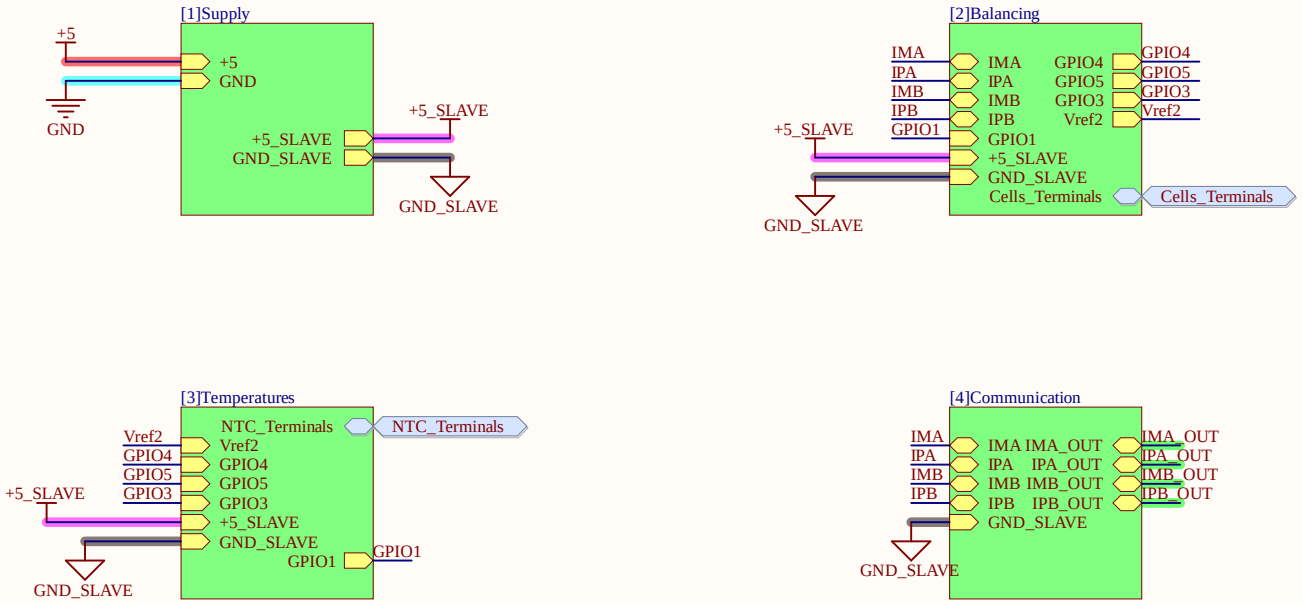

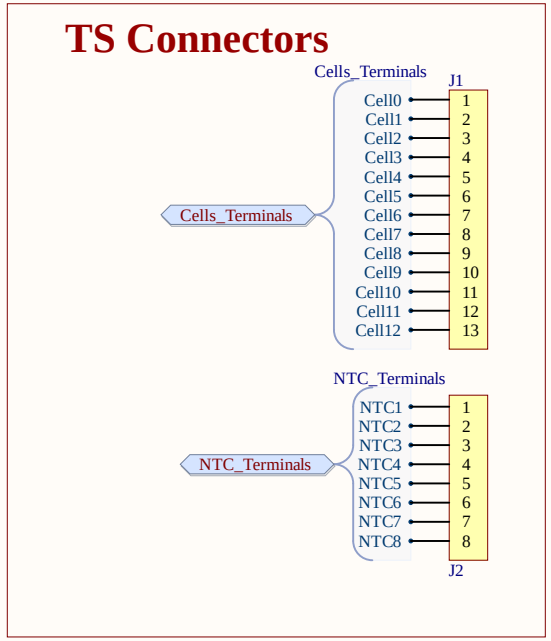

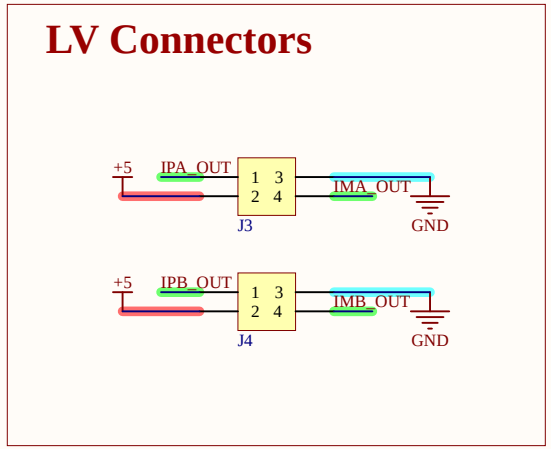

AMS Slave

This PCB is the AMS (BMS) Slave ECU of the 2023-24 Accumulator from e-Tech Racing Formula Student Team. 3 AMS Slaves are placed on each stack, two of them reading 10 voltages and one of them reading 8. Hence, 15 AMS Slaves are placed on the Accumulator, reading 140 voltages and 120 temperatures in total.

The IC used for the cells voltage monitoring is LTC6811-1, in addition to a multiplexer to monitor 8 NTCs using LTC6811's GPIOS.

The board is capable of reading and processing up to 12 cell voltages and 8 temperature measurements.

The slave communicates via isoSPI in a daisy chain to the master board, wich performs all the calculations and controls the safety of the battery.

The majority of the design i based on the LTC6811 datasheet, the DC2259A development board and previous versions of the AMS of the team.

In order to comply with FSG rules this board must be coated with a UL94-V0

Green: isoSPI
Cyan: Untreated GND
Red: Untreated supply
Pink: Treated supply
Gray: Treated GND
Yellow: Measurements

Company: e-Tech Racing	www.e-techracing.es	
Project: AMS Slave	Variant: [No Variations]	
Size: -	Page Contents: SLAVE_HW.SchDoc	Version: 1
		Department: PCBs
Author: Andreu Senis	andreu.senis@estudiantat.upc.edu	Sheet 1 of 5
Checked by:		Date: 17/11/2023

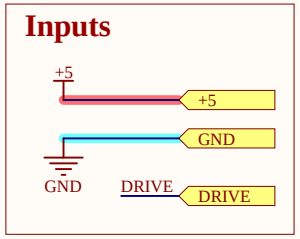

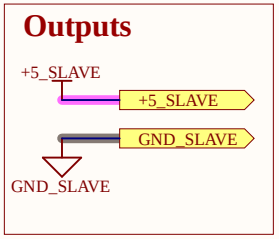

Maximum Input current U201 is 30mA for the Vreg pin and 0.55 mA for the V+ pin, and 1uA for U301

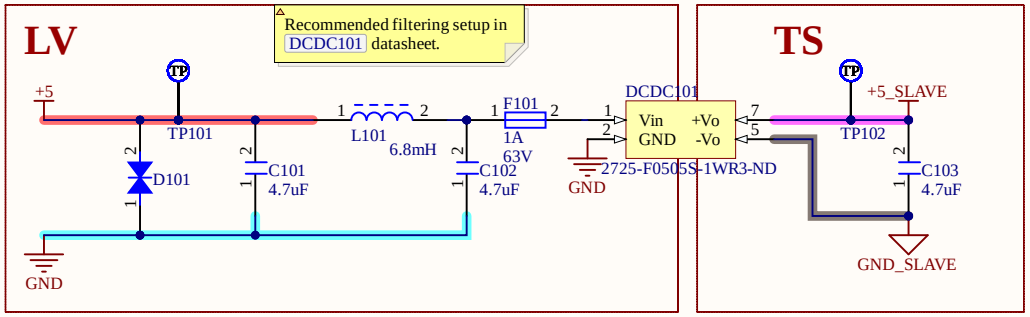

TS and LV must be separated by 4 mm over surface and coated

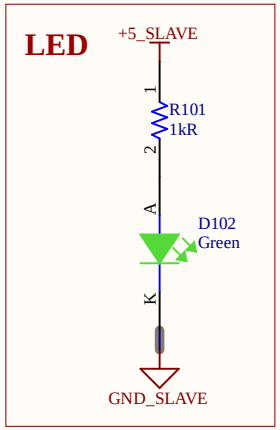

Overlay: D102 is the +5V supply indicator

Company: e-Tech Racing	www.e-techracing.es		
Project: AMS Slave	Variant: [No Variations]		
Size: -	Page Contents: [1]Supply.SchDoc	Version: 1	
		Department: PCBs	
Author: Andreu Senis	andreu.senis@estudiantat.upc.edu	Sheet 2 of 5	
Checked by:		Date: 17/11/2023	

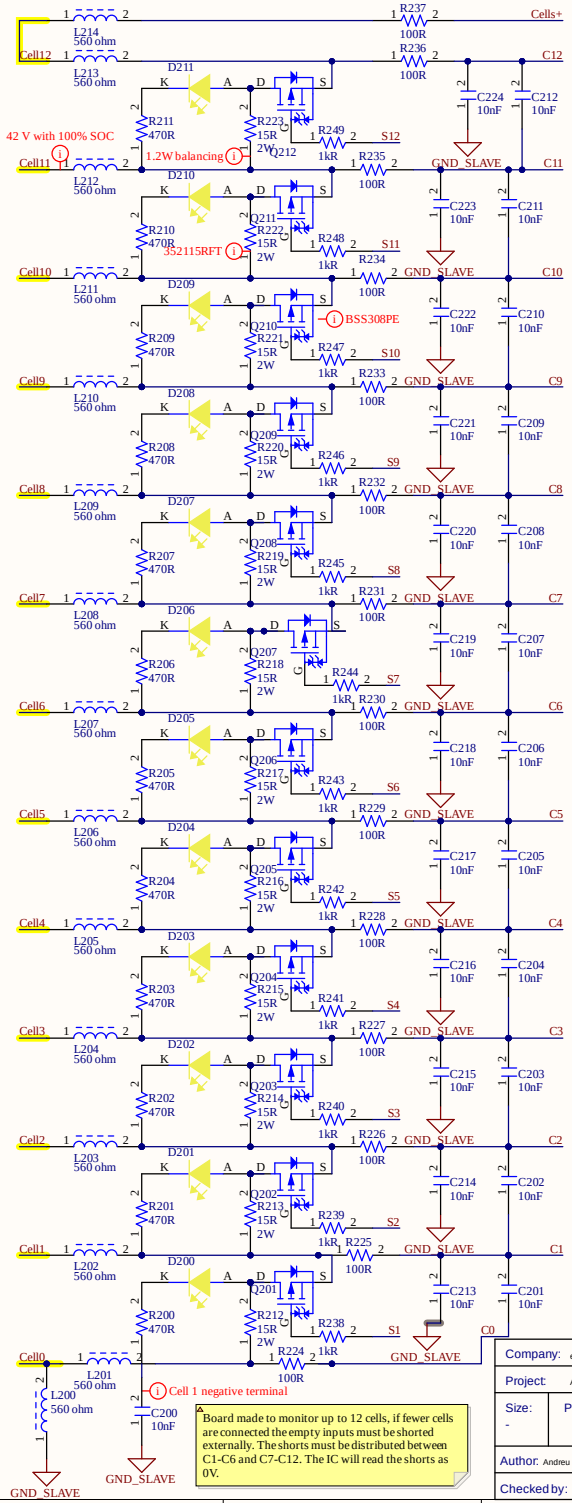

Board made to monitor up to 12 cells, if fewer cells are connected the empty inputs must be shorted externally. The shorts must be distributed between C1-C6 and C7-C12. The IC will read the shorts as 0V.

Cell monitor IC

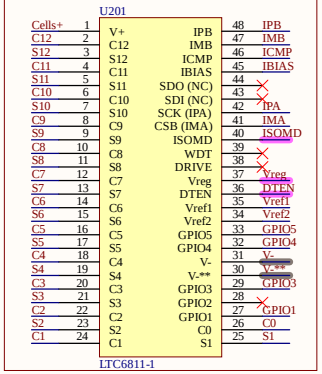

Outputs

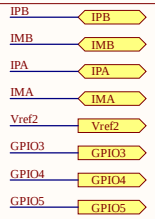

Inputs

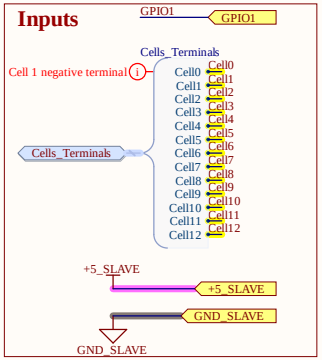

Settings

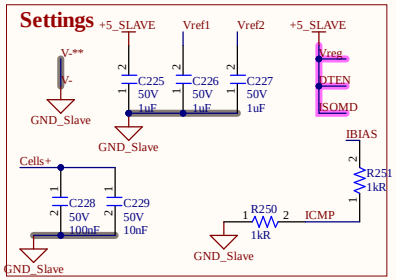

Company: e-Tech Racing	www.e-techracing.es		
Project: AMS Slave	Variant: [No Variations]		
Size: -	Page Contents: [2]Balancing.SchDoc	Version: 1	
		Department: PCBs	
Author: Andreu Senis	andreu.senis@estudiantat.upc.edu	Sheet 3 of 5	
Checked by:		Date: 17/11/2023	

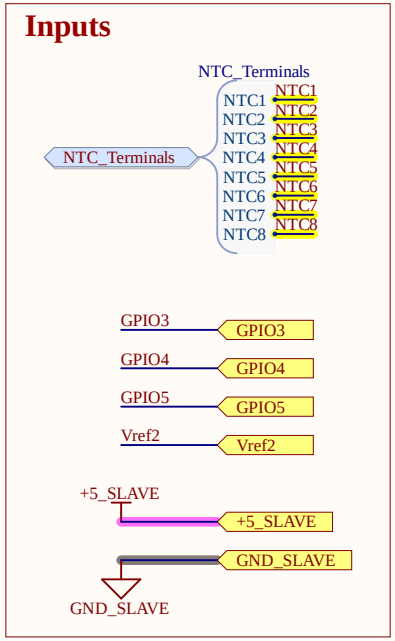

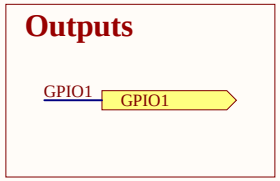

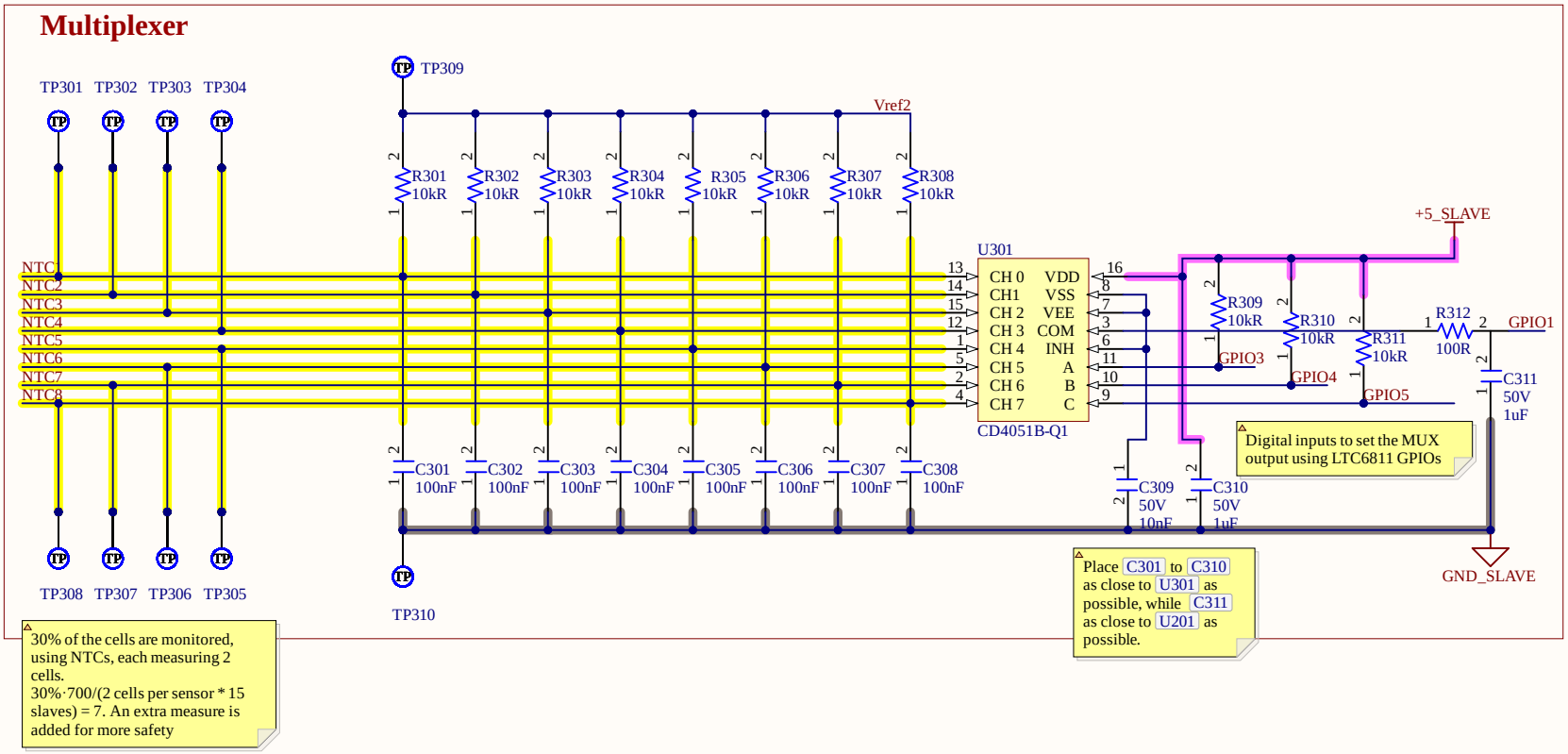

Company: e-Tech Racing	www.e-techracing.es		
Project: AMS Slave	Variant: [No Variations]		
Size: -	Page Contents: [3]Temperatures.SchDoc	Version: 1	
		Department: PCBs	
Author: Andreu Senis	andreu.senis@estudiantat.upc.edu	Sheet 4 of 5	
Checked by:		Date: 17/11/2023	

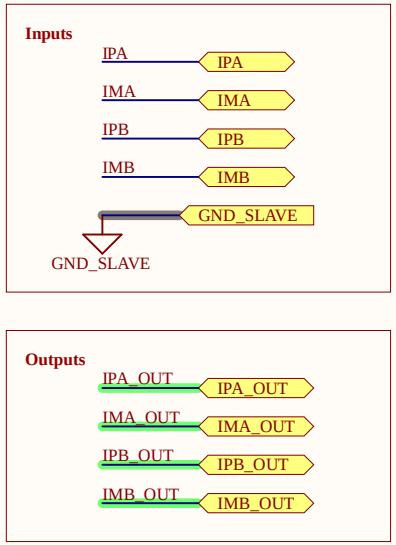

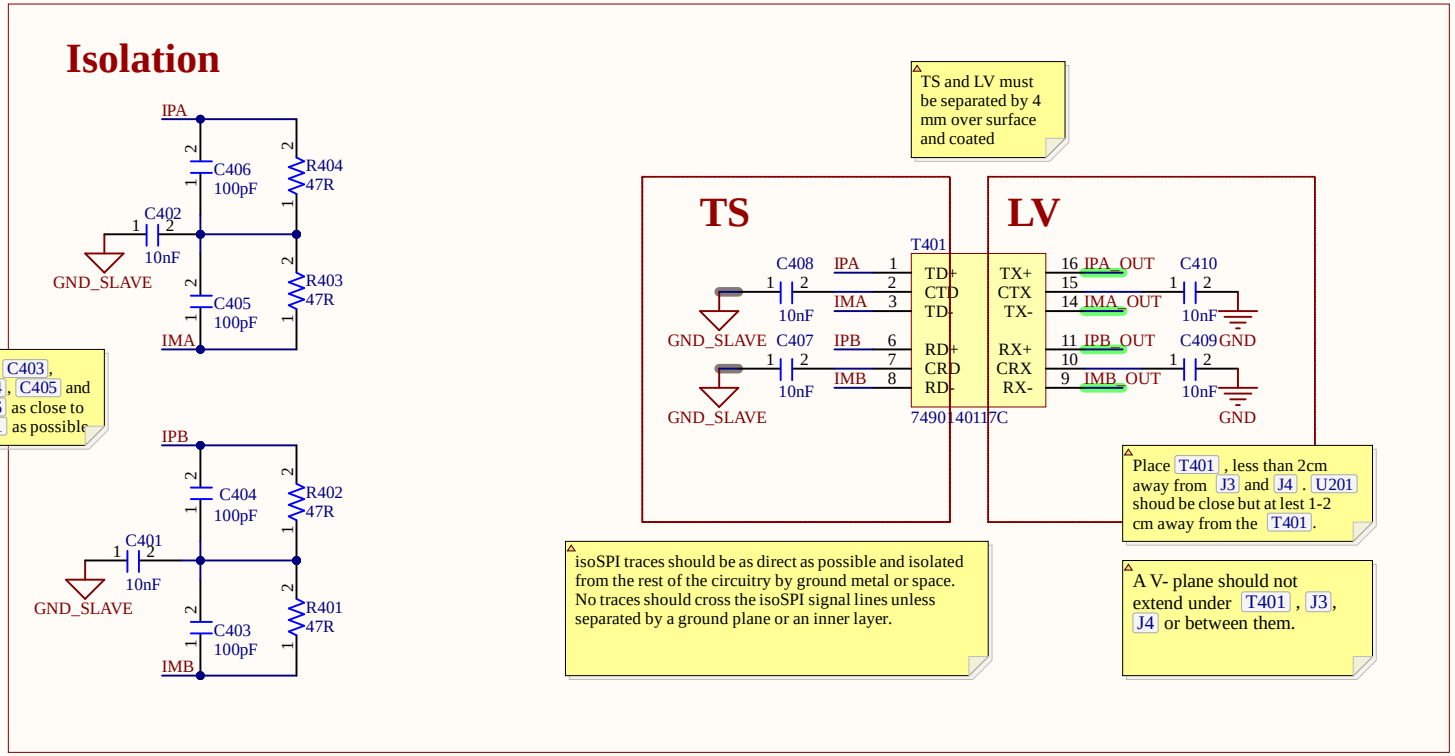

Company: e-Tech Racing	www.e-techracing.es		
Project: AMS Slave	Variant: [No Variations]		
Size: -	Page Contents: [4]Communication.SchDoc	Version: 1	
		Department: PCBs	
Author: Andreu Senis	andreu.senis@estudiantat.upc.edu	Sheet 5 of 5	
Checked by:		Date: 17/11/2023	