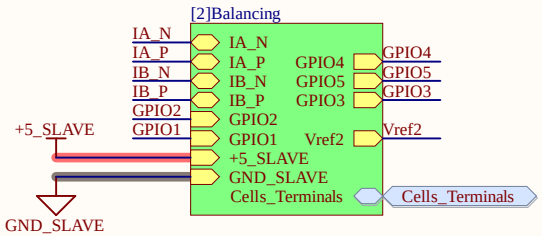

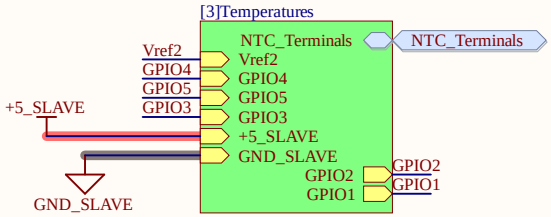

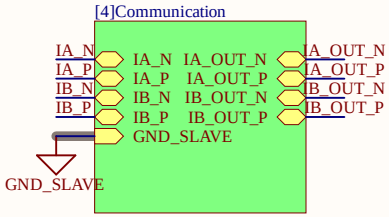

TS Connectors

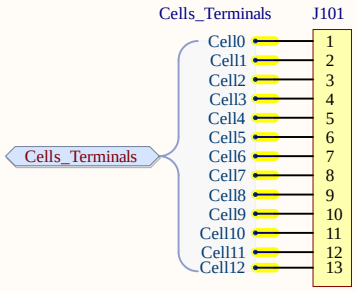

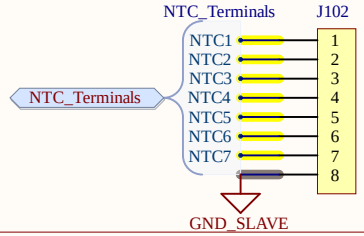

LV Connectors

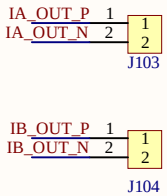

AMS Slave

This PCB is the AMS (BMS) Slave ECU of the 2023-24 Accumulator from e-Tech Racing Formula Student Team. 3 AMS Slaves are placed on each stack, two of them reading 10 voltages and one of them reading 8. Hence, 15 AMS Slaves are placed on the Accumulator, reading 140 voltages and 120 temperatures in total.

The IC used for the cells voltage monitoring is LTC6811-1, in addition to a multiplexer to monitor 8 NTCs using LTC6811's GPIOS.

The board is capable of reading and processing up to 12 cell voltages and 8 temperature measurements.

The slave communicates via isoSPI in a daisy chain to the master board, wich performs all the calculations and controls the safety of the battery.

The majority of the design i based on the LTC6811 datasheet, the DC2259A development board and previous versions of the AMS of the team.

In order to comply with FSG rules this board must be coated with a UL94-V0

Green: isoSPI
Yellow: Measurements
Pink: Balancing
Red: Supply
Gray: GND

Maximum Input current U201 is 30mA for the Vreg pin and 0.55 mA for the V+ pin, and 1uA for U301. All traces can be 0.2 mm, given that this widht can withstand 1 A and all inputs are fused at this value. The board is supplied by the cells it is monitoring, when the LV isn't active, the monitoring IC's enter the sleep mode, reducing their current consumption to 1.9 uA through the V+ pin.

Company: e-Tech Racing www.e-techracing.es		
Project: AMS Slave	Variant: [No Variations]	
Size: -	Page Contents: [1]SLAVE_HW.SchDoc	Version: 1
		Department: PCBs
Author: Andreu Senis andreu.senis@estudiantat.upc.edu		Sheet 1 of 5
Checked by:		Date: 12/02/2024

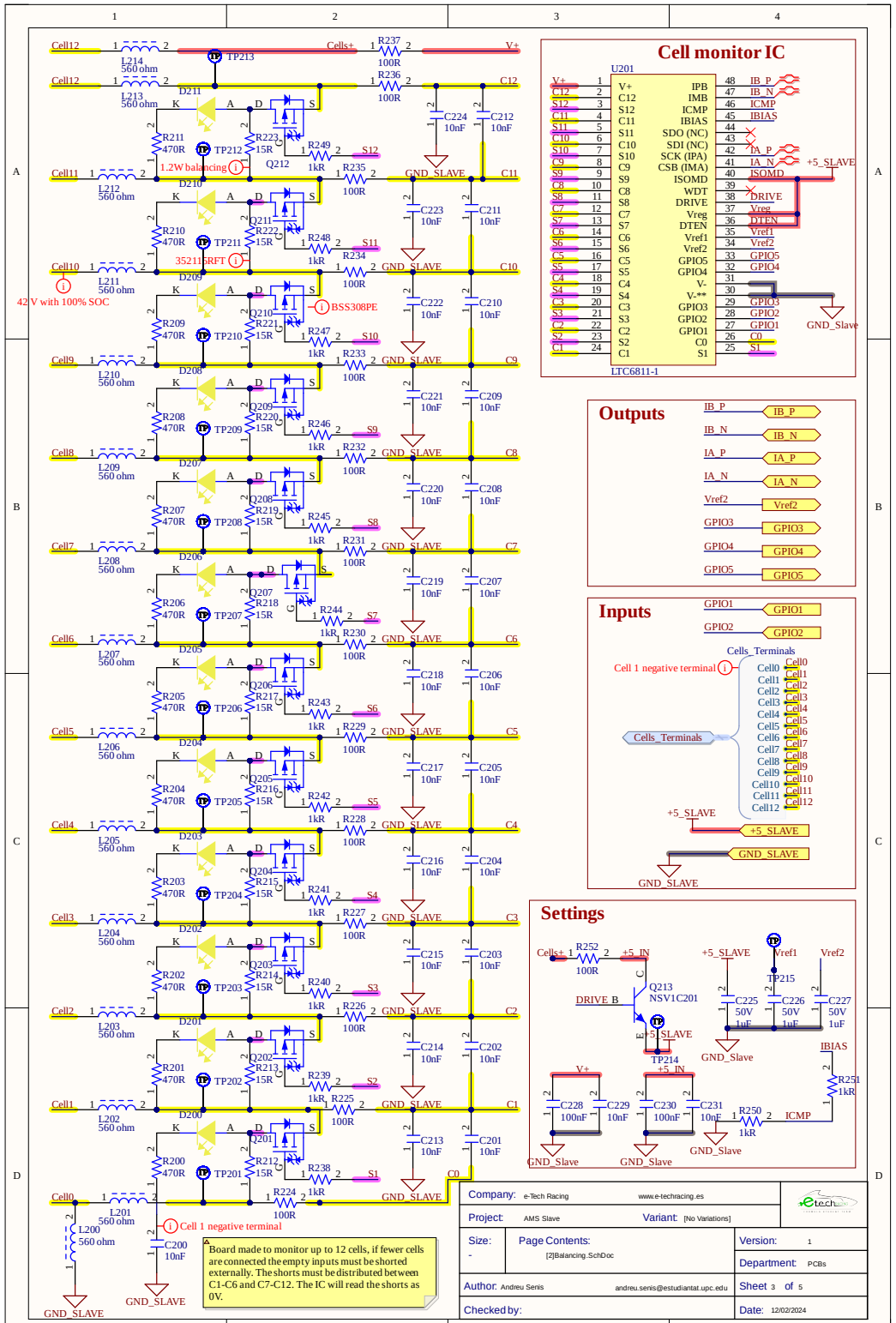
Cell monitor IC
U201
LTC6811-1
Outputs
IB_P
IB_N
IA_P
IA_N
Vref2
GPIO3
GPIO4
GPIO5
Inputs
GPIO1
GPIO2
Cells_Terminals
Cell 1 negative terminal
+5_SLAVE
GND_SLAVE
Settings
Cells+
+5_IN
DRIVE_B
Q213
NSV1C201
TP215
TP214
IBIAS
ICMP
GND_Slave
1.2W balancing
35211RFT
BSS308PE
42 V with 100% SOC
Cell 1 negative terminal
Board made to monitor up to 12 cells, if fewer cells are connected the empty inputs must be shorted externally. The shorts must be distributed between C1-C6 and C7-C12. The IC will read the shorts as 0V.
Company: e-Tech Racing
www.e-techracing.es
Project: AMS Slave
Variant: [No Variations]
Size: -
Page Contents: [2]Balancing.SchDoc
Version: 1
Department: PCBs
Author: Andreu Senis
andreu.senis@estudiantat.upc.edu
Sheet 3 of 5
Checked by:
Date: 12/02/2024

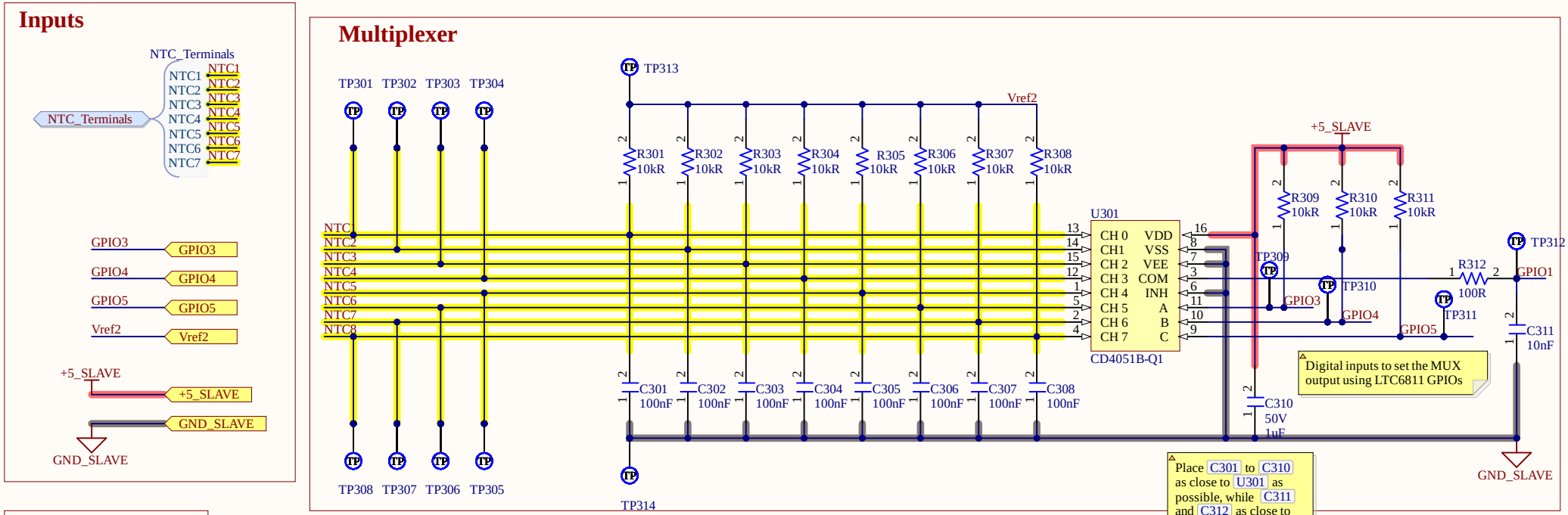

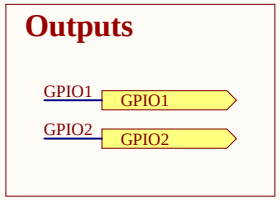

30% of the cells are monitored, using NTCs, each measuring 2 cells.
30%·700/(2 cells per sensor * 15 slaves) = 7.

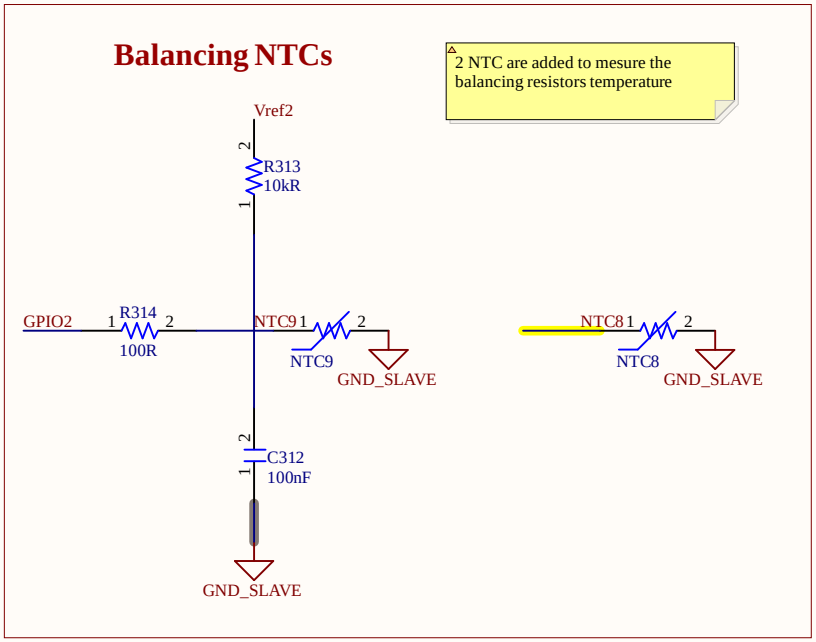

Company: e-Tech Racing	www.e-techracing.es		
Project: AMS Slave	Variant: [No Variations]		
Size: -	Page Contents: [3]Temperatures.SchDoc	Version: 1	
		Department: PCBs	
Author: Andreu Senis	andreu.senis@estudiantat.upc.edu	Sheet 4 of 5	
Checked by:		Date: 12/02/2024	

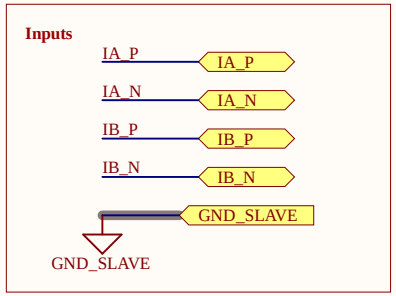

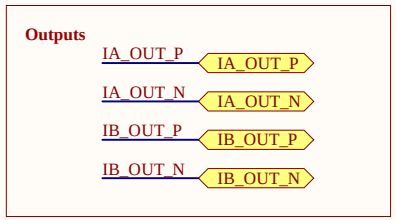

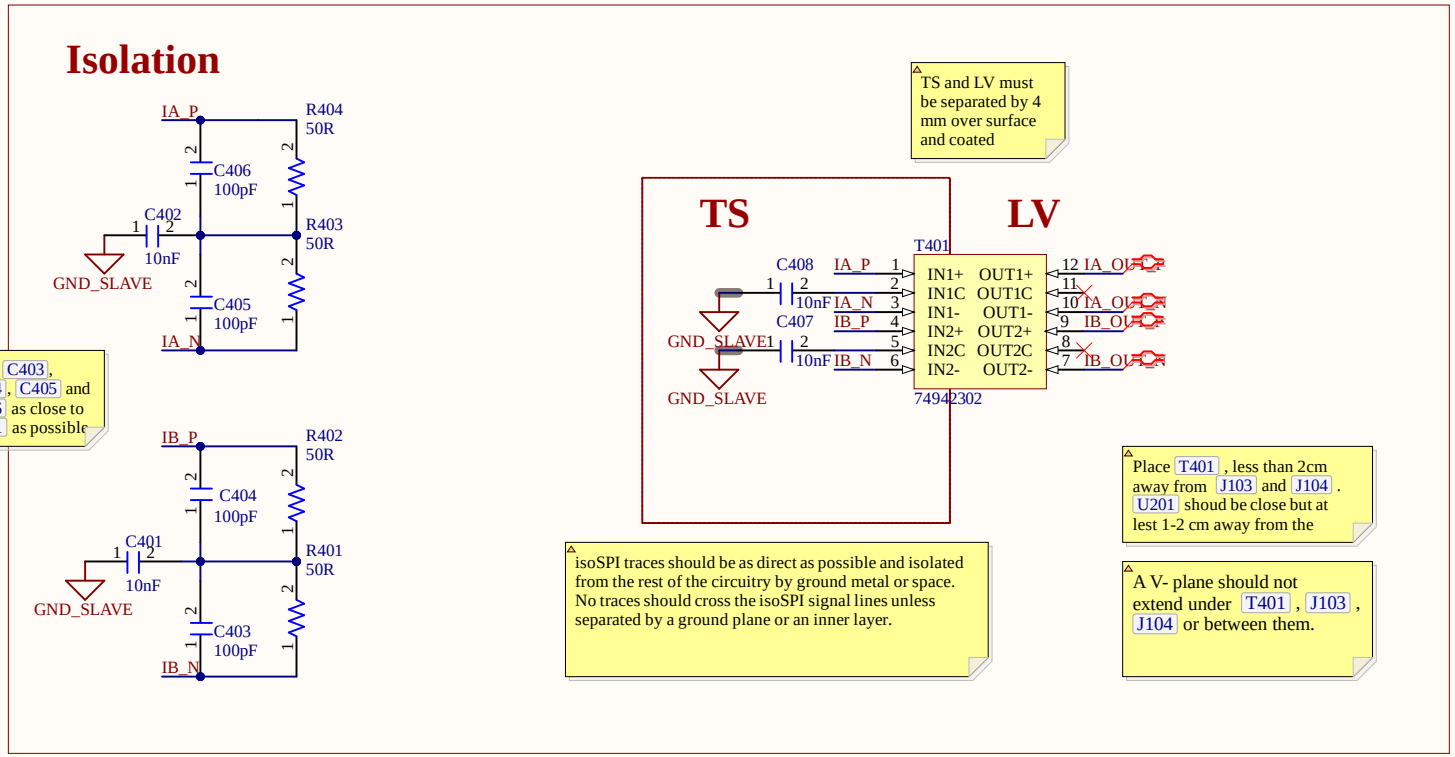

Company: e-Tech Racing	www.e-techracing.es		
Project: AMS Slave	Variant: [No Variations]		
Size: -	Page Contents: [4]Communication.SchDoc	Version: 1	
		Department: PCBs	
Author: Andreu Senis	andreu.senis@estudiantat.upc.edu	Sheet 5 of 5	
Checked by:		Date: 12/02/2024	

Comment	Description	Designator	Footprint	LibRef	Quantity
885012207122	Cap Cer 10000PF 100V X7R 0805	C200, C201, C202, C203, C204, C205, C206, C207, C208, C209, C210, C211, C212, C213, C214, C215, C216, C217, C218, C219, C220, C221, C222, C223, C224, C229, C231, C311, C401, C402, C407, C408	C0805FNPC-R	C10n-100V-0805FNPC-X7R	32
885012207103	Multilayer Ceramic Capacitor, Wcap-Csgp Series, 1 F, 10%, X7R, 50 V, 0805 [2012 Metric] Rohs Compliant: Yes	C225, C226, C227, C310	C0805FNPC-R	C1u-50V-0805FNPC-X7R	4
885012207128	0.1µF ±10% 100V Ceramic Capacitor X7R 0805 (2012 Metric)	C228, C230, C301, C302, C303, C304, C305, C306, C307, C308, C312	C0805FNPC-R	C100n-100V-0805FNPC-X7R	11
885012007082	Cap Cer 100PF 100V C0G/NP0 0805	C403, C404, C405, C406	C0805FNPC-W	C100p-100V-0805FNPC-C0G/NP0	4
150080YS75000	2 V Yellow LED 2012 (0805) SMD, Wurth Elektronik WL-SMCW 150080YS75000	D200, D201, D202, D203, D204, D205, D206, D207, D208, D209, D210, D211	LED_0805_WE	LEDYS-0805-120	12
61301311121	THT Vertical Pin Header WR-PHD, Pitch 2.54 mm, Single Row, 13 pins	J101	J_Pinheader_1x13	J_Pinheader_1x13	1
61301211121	THT Vertical Pin Header WR-PHD, Pitch 2.54 mm, Single Row, 12 pins	J102	J_Pinheader_1x8	J_Pinheader_1x8	1
436500215	Header 1 Row Vertical Polarizing Peg 2 Pin SMT/Glow Wire Compatible Tin Plate	J103, J104	J_MicroFit_2x1	J_MicroFit_2x1	2
560 ohm		L200, L201, L202, L203, L204, L205, L206, L207, L208, L209, L210, L211, L212, L213, L214	L_Ferrite_bead_0805	L_Ferrite_bead_782853561	15
NTC_10KR		NTC8, NTC9	NTC_PCB	NTC_10KR	2
BSS308PE	Infineon's highly innovative OptiMOS™ families include p-channel power MOSFETs, SOT-23-3, RoHS	Q201, Q202, Q203, Q204, Q205, Q206, Q207, Q208, Q209, Q210, Q211, Q212	TRT-PCH-2/30-BSS	TRT-PCH-2/30-BSS	12
NSV1C201	NPN Ic=2A Vceo=100V hfe=40~360 P=800mW	Q213	TRT-NPN-2/100-SOT23_1	TRT-NPN-2/100-SOT23	1
CR0805-FX-4700GLF	Res Thick Film 0805 470 Ohm 1% 1/8W ±100ppm/°C Molded SMD SMD Paper Tape on Plastic Reel	R200, R201, R202, R203, R204, R205, R206, R207, R208, R209, R210, R211	R0805FTK	R470-0805FTK	12
352115RFT	Res Thick Film 2512 15 Ohm 1% 2W ±100ppm/C Pad SMD T/R	R212, R213, R214, R215, R216, R217, R218, R219, R220, R221, R222, R223	R2512FTK	R15-2512FTK	12
CR0805-FX-1000ELF	Res Thick Film 0805 100 Ohm 1% 1/8W ±100ppm/°C Molded SMD SMD Paper Tape on Plastic Reel	R224, R225, R226, R227, R228, R229, R230, R231, R232, R233, R234, R235, R236, R237, R252, R312, R314	R0805FTK	R100-0805FTK	17
CR0805-JW-102ELF	Res Thick Film 0805 1K Ohm 5% 1/8W ±200ppm/°C Molded SMD SMD Paper Tape on Plastic Reel	R238, R239, R240, R241, R242, R243, R244, R245, R246, R247, R248, R249, R250, R251	R0805FTK	R1k-0805FTK	14
CR0805-JW-103ELF	BOURNS CR0805-JW-103ELF Surface Mount Chip Resistor, Thick Film, CR Series, 10 kohm, 125 mW, 5%, 150 V	R301, R302, R303, R304, R305, R306, R307, R308, R309, R310, R311, R313	R0805FTK	R10k-0805FTK	12
50R	Res Thick Film 0805 50 Ohm 1% 0.125W(1/8W) ±100ppm/C Pad SMD Automotive T/R	R401, R402, R403, R404	R0805FTK	R50-0805FTK_1	4
74942302		T401	TFMR_74942302	TFMR_4300V_1min_74942302	1
LTC6811-1	Sc-Automotive Multicell Battery Stack Monitor With Addressable Isospi Interface	U201	U_LTC6811G-2	U_LTC6811-1	1
CD4051B-Q1	CD4053B-Q1 Automotive Cmos Tripl	U301	CD4051B-Q1	CD4051B-Q1	1