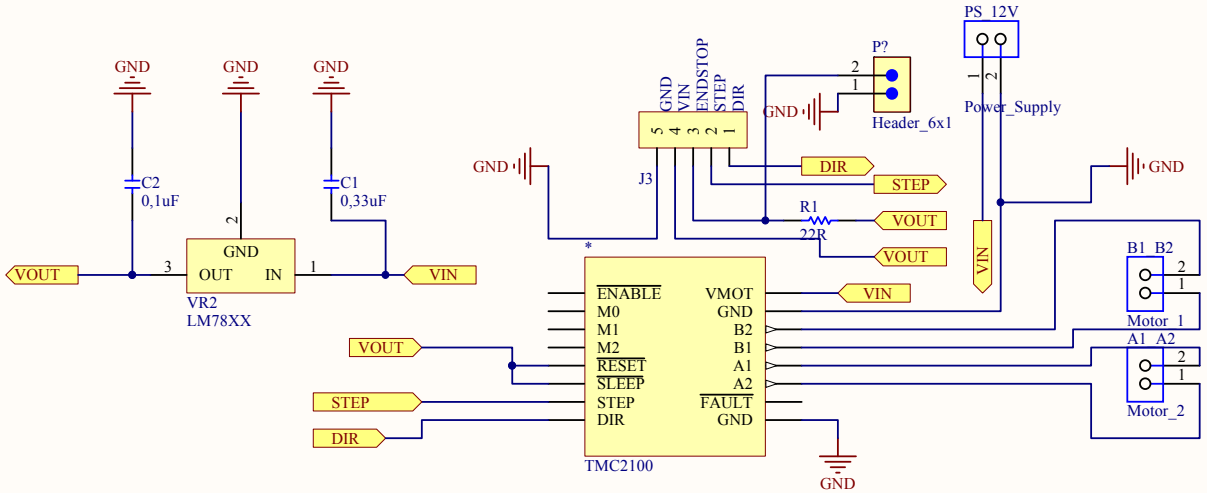

Title		
Size A4	Number	Revision
Date: 23-10-2017		Sheet of
File: motor.SchDoc		Drawn By: