ARCHON 15W POWER HUB:
High-Efficiency DC-DC Converter & Distribution Node

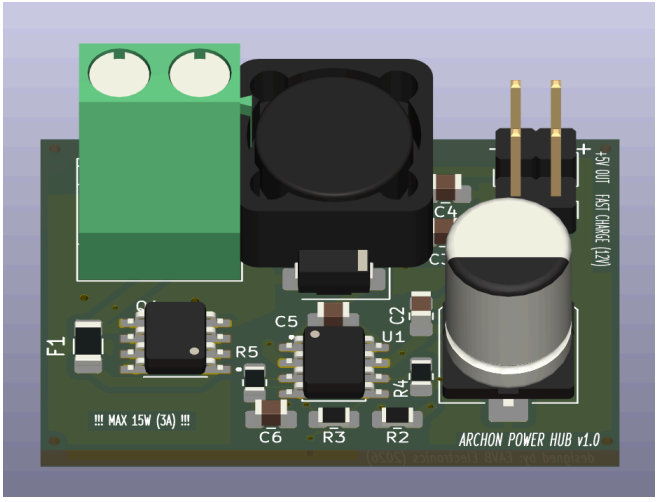

GENERAL DESCRIPTION

The Archon Power Hub is a robust, high-efficiency synchronous switch-mode DC-DC step-down converter designed for precision voltage regulation and hardware protection. Centered around the MP1584EN high-frequency switching architecture, the Archon seamlessly steps down a 12V DC input to a heavily filtered, stable 5V output. Featuring hardware-level PMOS reverse-polarity shielding and a heavy copper thermal ground plane, the Archon delivers clean, low-noise power optimized for sensitive embedded electronics, microcontrollers, and prototyping environments.

KEY FEATURES

- **Optimized Power Delivery:** 5V output at up to 3.0A continuous current (15W).
- **Wide Input Range:** 7.0V to 12.0V DC operational input.
- **Hardware-Level Protection:** Integrated P-Channel MOSFET (Q1) and Fuse (F1) for zero-drop reverse polarity and overcurrent protection.
- **High-Frequency Switching:** ~1.5 MHz programmable switching frequency minimizing external component size.
- **Ultra-Low Ripple:** Dual-stage parallel ceramic output filtering (C3, C4) for superior transient response.
- **Versatile Distribution:** Dual USB Type-C module headers and auxiliary Dupont outputs.

Electrical Characteristics & Ratings

Parameter	Symbol	Min	Typ	Max	Unit
ABSOLUTE MAXIMUM RATINGS					
Input Supply Voltage	V_{IN}	-0.3	--	15.0	V
Enable Pin Voltage	V_{EN}	-0.3	--	6.0	V
Switch Node Voltage	V_{SW}	-0.3	--	V_{IN} + 0.3	V
Maximum Junction Temperature	$T_{J(MAX)}$	--	--	150	°C
Storage Temperature Range	T_{STG}	-65	--	150	°C
RECOMMENDED OPERATING CONDITIONS					
Input Operating Range	V_{IN}	7.0	12.0	12.0	V
Regulated Output Voltage	V_{OUT}	4.90	5.00	5.10	V
Continuous Output Current	I_{OUT}	0	--	3.0	A
Switching Frequency	f_{SW}	--	1.5	--	MHz
Operating Ambient Temperature	T_A	-40	25	85	°C
SYSTEM PERFORMANCE & THERMAL					
Quiescent Current (No Load)	I_Q	--	1.0	1.5	mA
Conversion Efficiency (VIN=12V, 2A)	η	--	92	--	%
Output Voltage Ripple	V_{RIPPLE}	--	30	50	mV
Thermal Resistance (Junction-to-Ambient)	θ_{JA}	--	50.0	--	°C/W

SYSTEM ARCHITECTURE & THEORY OF OPERATION

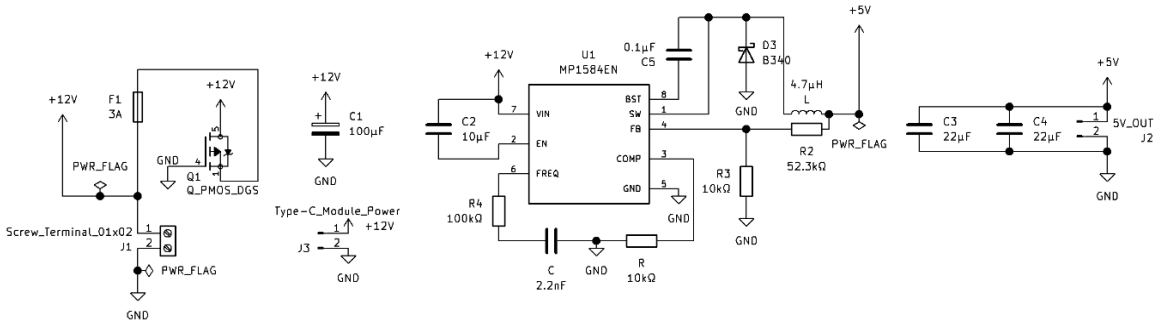

1. Input Protection Stage

Power enters via the J1 screw terminal and immediately passes through an overcurrent fuse (F1) and a P-Channel MOSFET (Q1). Unlike a standard blocking diode which wastes power through forward voltage drop, Q1 is configured as a low-RDS(on) reverse-polarity shield. If a power source is connected with reversed polarity, the gate-to-source voltage is neutralized, driving the PMOS into strict cut-off. This creates an immediate open circuit, protecting all downstream components with near-zero thermal loss during normal operation.

2. High-Frequency Step-Down Conversion

The core regulation is handled by U1 (MP1584EN). By utilizing a high switching frequency, the converter maintains greater than 90% efficiency while allowing the use of a highly compact 4.7µH surface-mount inductor (L2). The output voltage is strictly clamped to 5.0V via the precision feedback resistor network (R2, R3), which constantly samples the output node to dynamically adjust the internal duty cycle.

3. Switch Node & EMI Mitigation

To minimize electromagnetic interference (EMI), the "hot loop" comprising the U1 switch pin, inductor L2, and the Schottky catch diode (D3) is physically condensed. Trace lengths within this switching node are kept microscopic to reduce parasitic inductance and prevent the traces from acting as RF antennas.

4. Output Filtering & Distribution

Output power stability is guaranteed by placing two ceramic capacitors (C3 and C4) in parallel directly at the 5V output net. This parallel configuration drastically lowers the Equivalent Series Resistance (ESR) and Equivalent Series Inductance (ESL), acting as a high-speed shock absorber for high-frequency voltage ripples before the power is distributed to the Type-C and auxiliary headers.

PCB LAYOUT & THERMAL MANAGEMENT

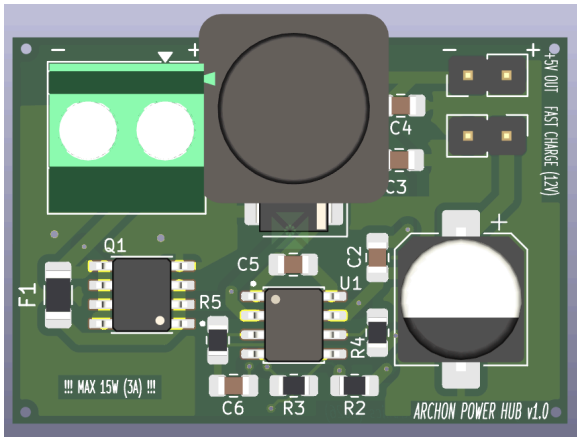

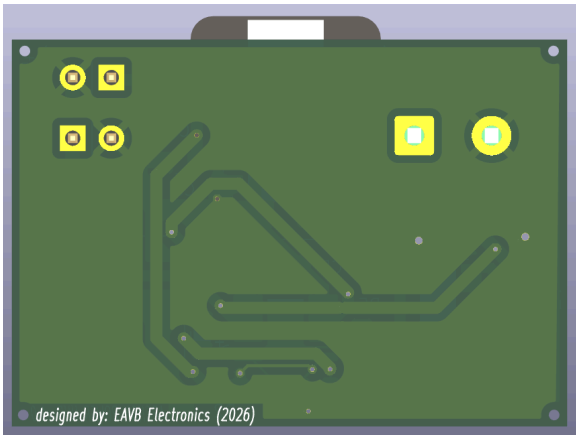

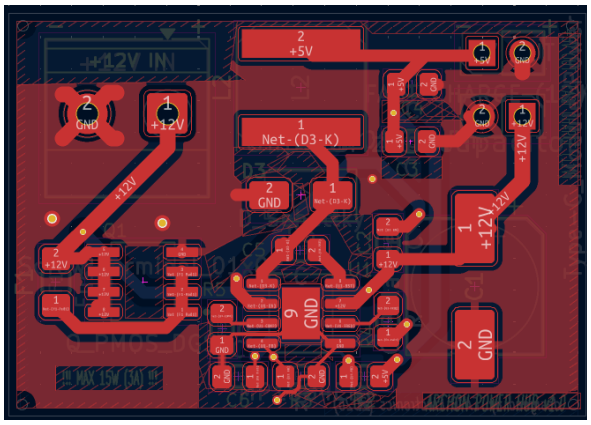

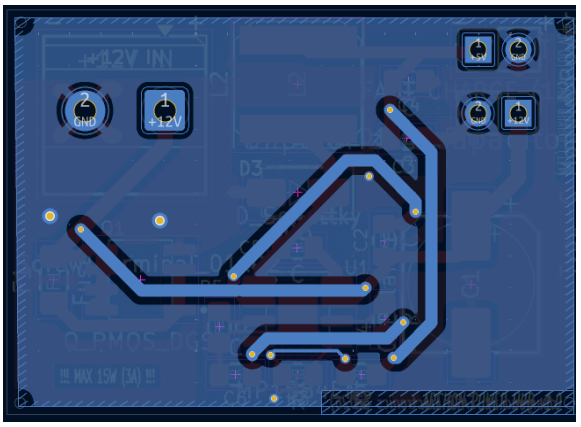

1. The Ocean Ground Strategy

The Archon utilizes a continuous bottom-layer copper pour connected to the primary Ground net. This uninterrupted plane serves a dual purpose: it acts as a low-impedance return path for high-frequency switching currents (reducing ground bounce), and it functions as a massive passive heatsink.

2. Thermal Vias

To prevent thermal throttling within the MP1584EN silicon during continuous 3A loads, multiple thermal vias are stitched directly adjacent to the IC and inductor pads. These vias bridge the top-layer heat generators directly to the bottom "ocean" ground plane, radiating heat safely across the 75x50mm FR4 fiberglass substrate.

3. High-Current Routing

All primary power paths (VIN, Switch Node, and VOUT) are routed using oversized 0.8mm to 1.0mm copper traces. This exceeds standard ampacity requirements, ensuring minimal resistive voltage drops and virtually eliminating trace heating under peak load conditions.

Bill of Materials

Designator	Component Description	Value / Specification	Qty
U1	High-Frequency Synchronous Buck Converter	MP1584EN	1
Q1	P-Channel Power MOSFET	AO4407A	1
D3	Schottky Barrier Rectifier Diode	B340 (3A, 40V)	1
L2	Shielded SMD Power Inductor	4.7µH	1
F1	SMD Overcurrent Protection Fuse	3.0A Fast Blow	1
C1	Electrolytic Input Filter Capacitor	100µF (25V)	1
C2	Ceramic Input Bypass Capacitor (MLCC)	10µF	1
C3, C4	Ceramic Output Filter Capacitor (MLCC)	22µF	2
C5	Ceramic Bootstrap Capacitor	0.1µF	1
C6	Ceramic Compensation Capacitor	2.2nF	1
R4	Frequency Setting Resistor	100kΩ	1
R5	Compensation Resistor	10kΩ	1
R2	Top Feedback Resistor (5V Setting)	52.3kΩ (1% Tolerance)	1
R3	Bottom Feedback Resistor	10kΩ (1% Tolerance)	1
J1	2-Pin Screw Terminal Block	5.08mm Pitch	1
J2	2-Pin Output Header (Dupont)	2.54mm Pitch	1
J3	Type-C Power Delivery / Fast Charge Module	12V Tolerant	1