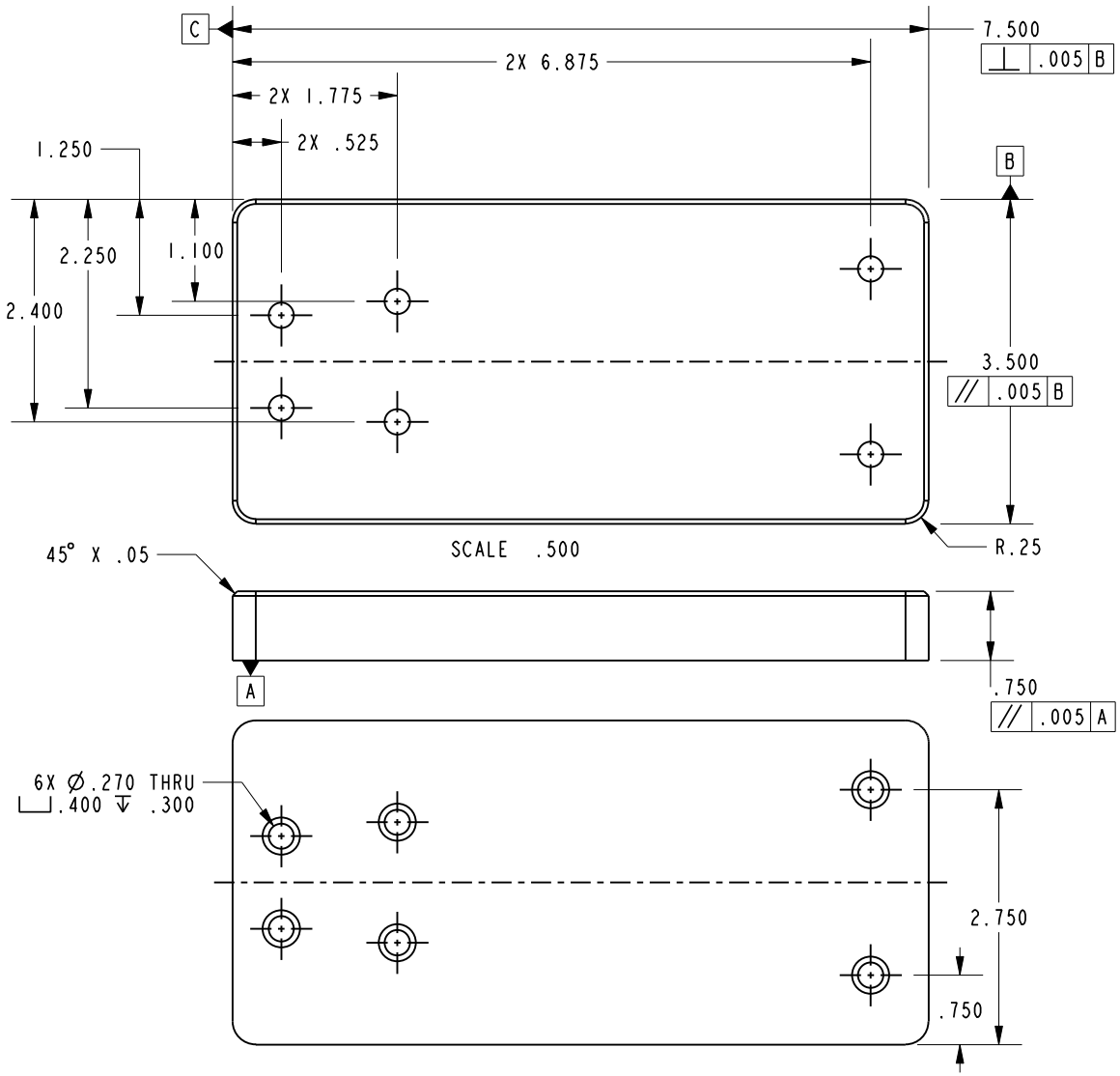

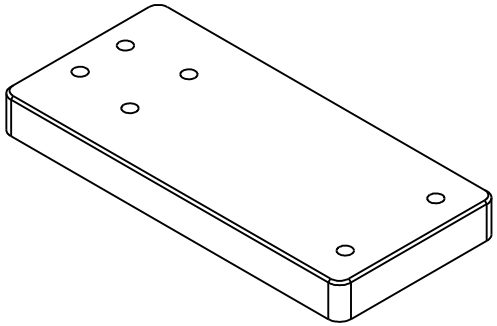

ZONE	REV	DESCRIPTION	DATE	APPROVED
-	-	-	-	-

COPYRIGHT 2005 BRASSTECH, INC.
THESE DRAWINGS AND THE DESIGNS DEPICTED HEREIN ARE THE PROPRIETARY PROPERTY OF BRASSTECH. ANY USE OR REPRODUCTION IS SUBJECT TO THE EXPRESS APPROVAL OF BRASSTECH. UNAUTHORIZED USE IS STRICTLY PROHIBITED. ALL RIGHTS RESERVED.

-	-
T-11700	-
NEXT ASSY	USED ON
APPLICATION	
REMOVE ALL BURRS AND SHARP EDGES	
MATERIAL	6061 ALUMINUM
FINISH	N/A

UNITS ARE: INCHES [MM]
TOLERANCES ARE:

FRACTIONS	DECIMALS	ANGLES
±1/64"	.X ±.1 .XX ±.010 .XXX±.005	±1°

(X.XXX) DENOTES CRITICAL DIMS.
ALL THREADS ARE CRITICAL

DRAWN	E. ANDRADE	5/9/17
CHECKED	.	.
APPROVED	.	.

BRASSTECH INCORPORATED
2001 E. CARNEGIE AVE.
SANTA ANA, CA 92705
(949) 417-5207

BASE

DWG NO. T-11701 REV -

SCALE .333 REF. - SHEET 1 OF 1