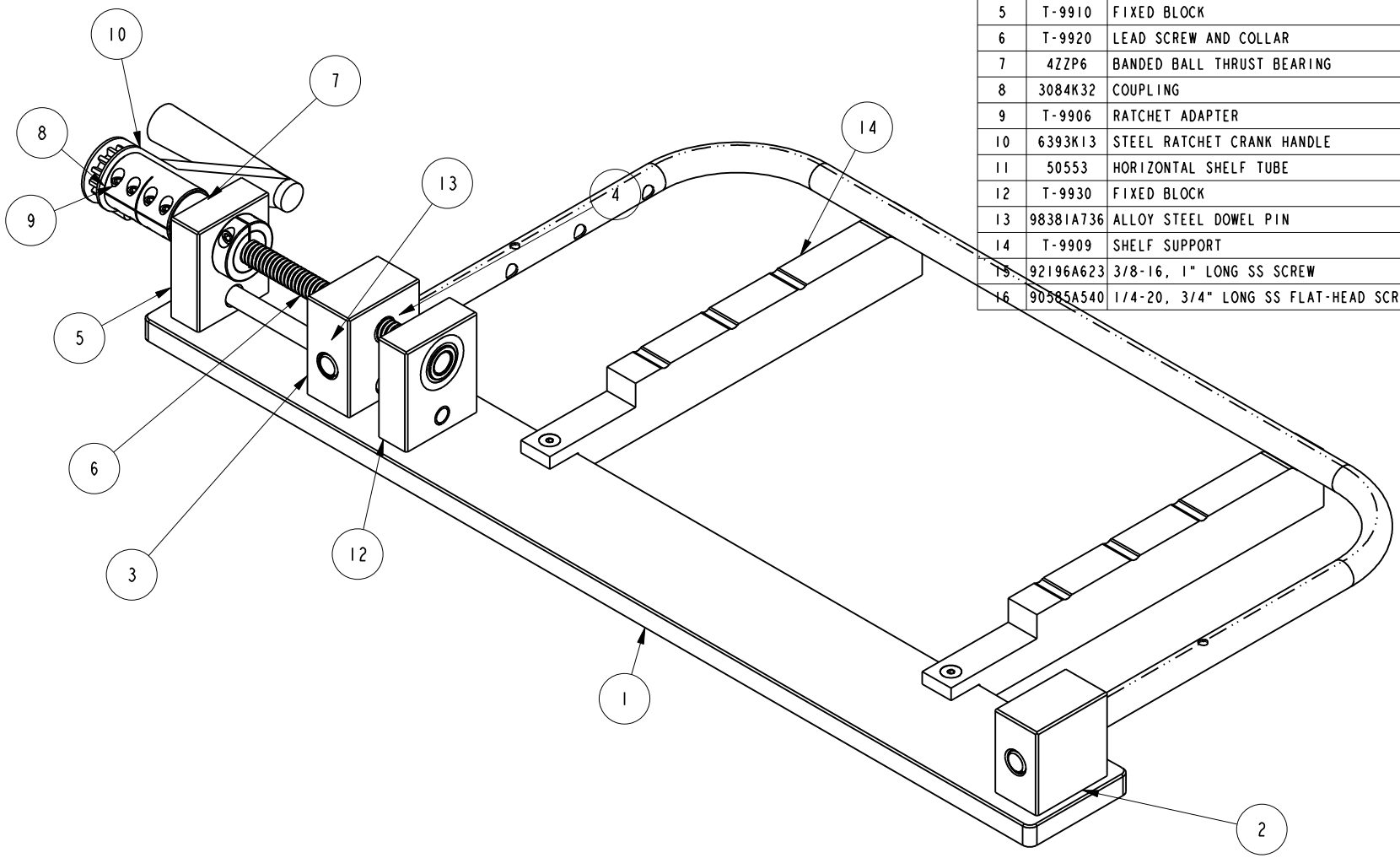

SCALE .250

BILL OF MATERIAL (CURRENT LEVEL)

ITEM	PT/ASSY	DESCRIPTION	TYPE	QTY.
1	T-9901	BASE	PART	1
2	T-9902	FIXED BLOCK	PART	1
3	T-9903	SLIDING BLOCK	PART	1
4	T-9908	PIN INSERT	PART	2
5	T-9910	FIXED BLOCK	ASSEMBLY	1
6	T-9920	LEAD SCREW AND COLLAR	ASSEMBLY	1
7	4ZZP6	BANDED BALL THRUST BEARING	PART	1
8	3084K32	COUPLING	PART	1
9	T-9906	RATCHET ADAPTER	PART	1
10	6393K13	STEEL RATCHET CRANK HANDLE	PART	1
11	50553	HORIZONTAL SHELF TUBE	PART	1
12	T-9930	FIXED BLOCK	ASSEMBLY	1
13	98381A736	ALLOY STEEL DOWEL PIN	PART	1
14	T-9909	SHELF SUPPORT	PART	2
15	92196A623	3/8-16, 1" LONG SS SCREW	PART	6
16	90585A540	1/4-20, 3/4" LONG SS FLAT-HEAD SCREW	PART	2

COPYRIGHT 2005 BRASSTECH, INC. THESE DRAWINGS AND THE DESIGNS DEPICTED HEREIN ARE THE PROPRIETARY PROPERTY OF BRASSTECH. ANY USE OR REPRODUCTION IS SUBJECT TO THE EXPRESS APPROVAL OF BRASSTECH. UNAUTHORIZED USE IS STRICTLY PROHIBITED. ALL RIGHTS RESERVED.

BRASSTECH INCORPORATED
2001 CARNEGIE AVE.
SANTA ANA, CA 92705
(949) 417-5207

HOTEL SHELF FIXTURE

ASSY. NO. T-9900

SCALE .067 | REF. - | SHEET 1 OF 1

REV	REV DESC	DATE
-	-	-
-	RELEASED	-