REVISIONS				
ZONE	REV.	DESCRIPTION	DATE	APPROVED

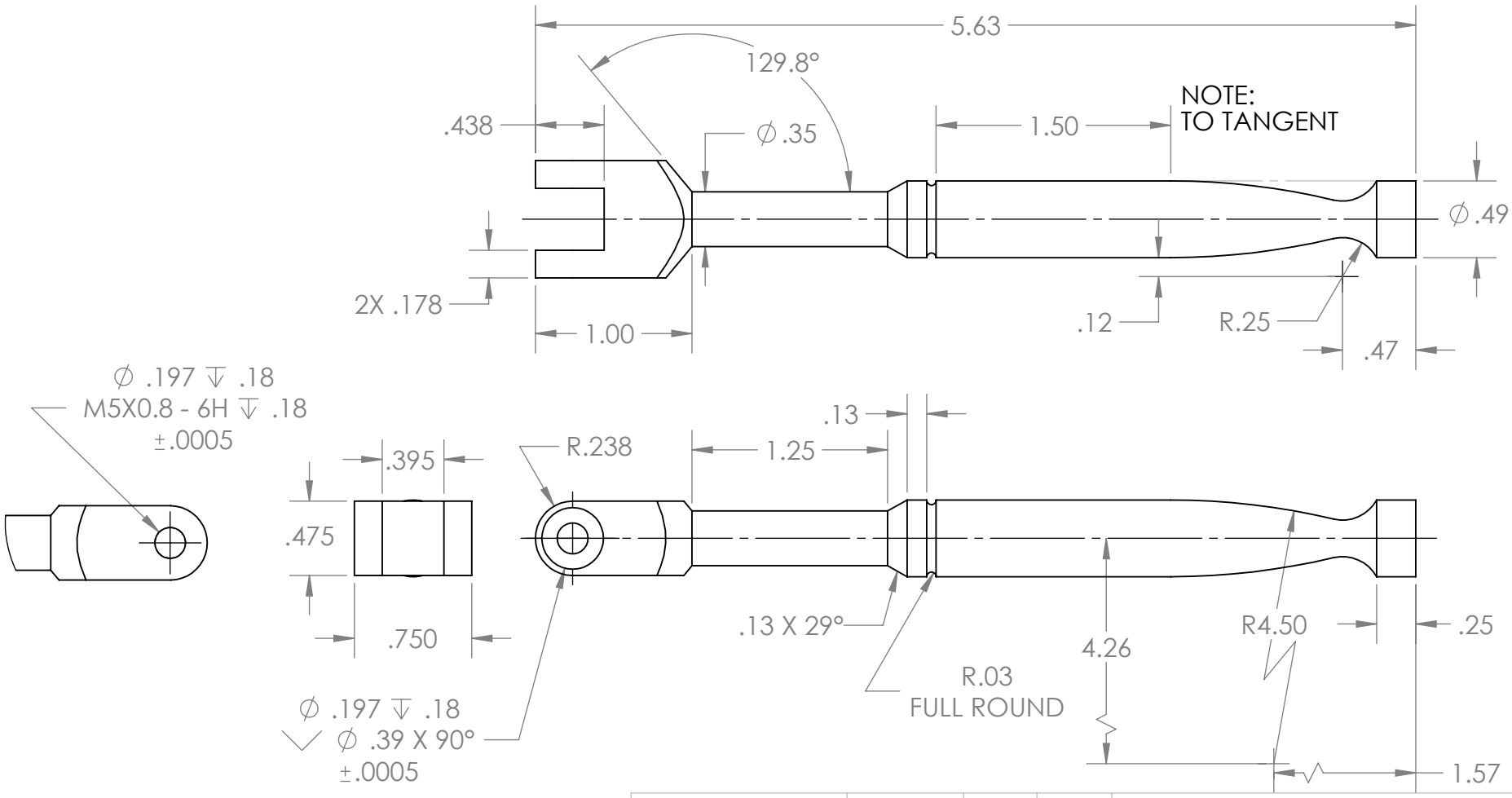

NOTE: BREAK ALL HARD EDGES .001

UNLESS OTHERWISE SPECIFIED:		NAME	DATE
DIMENSIONS ARE IN INCHES TOLERANCES: FRACTIONAL ± 1/16 ANGULAR: MACH ± .5 BEND ±1 TWO PLACE DECIMAL ±.01 THREE PLACE DECIMAL ±.002	DRAWN	EAN	4/3/22
	CHECKED		
	ENG APPR.		
	MFG APPR.		
INTERPRET GEOMETRIC TOLERANCING PER: ANSI Y 14.5	Q.A.		
MATERIAL AISI TYPE A2 TOOL STEEL	COMMENTS:		
FINISH CHROME PLATED			
DO NOT SCALE DRAWING			

EAN GRAPHICS

TITLE:

RATCHET HANDLE

SIZE	DWG. NO.	REV
A	ARW-001	-

SCALE: 1:1 | WT: 0.252 | SHEET 1 OF 1

PROPRIETARY AND CONFIDENTIAL

THE INFORMATION CONTAINED IN THIS DRAWING IS THE SOLE PROPERTY OF EAN GRAPHICS. ANY REPRODUCTION IN PART OR AS A WHOLE WITHOUT THE WRITTEN PERMISSION OF EAN GRAPHICS IS PROHIBITED.

NEXT ASSY	USED ON
APPLICATION	