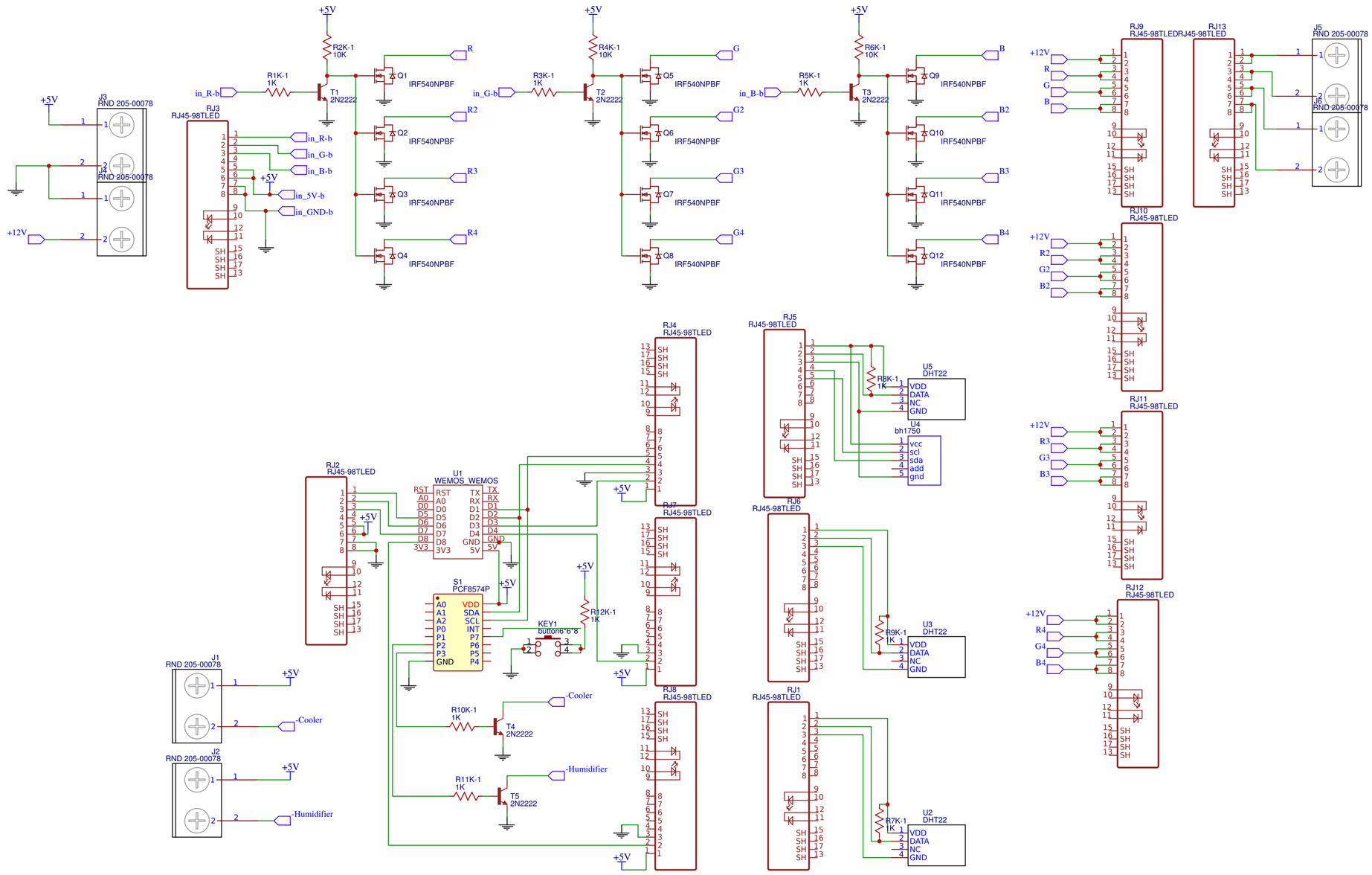

TITLE: Sheet_1	REV: 1.0
Date: 2018-05-10	Sheet: 1/1
EASYEDA V5.4.12	Drawn By: nai6320