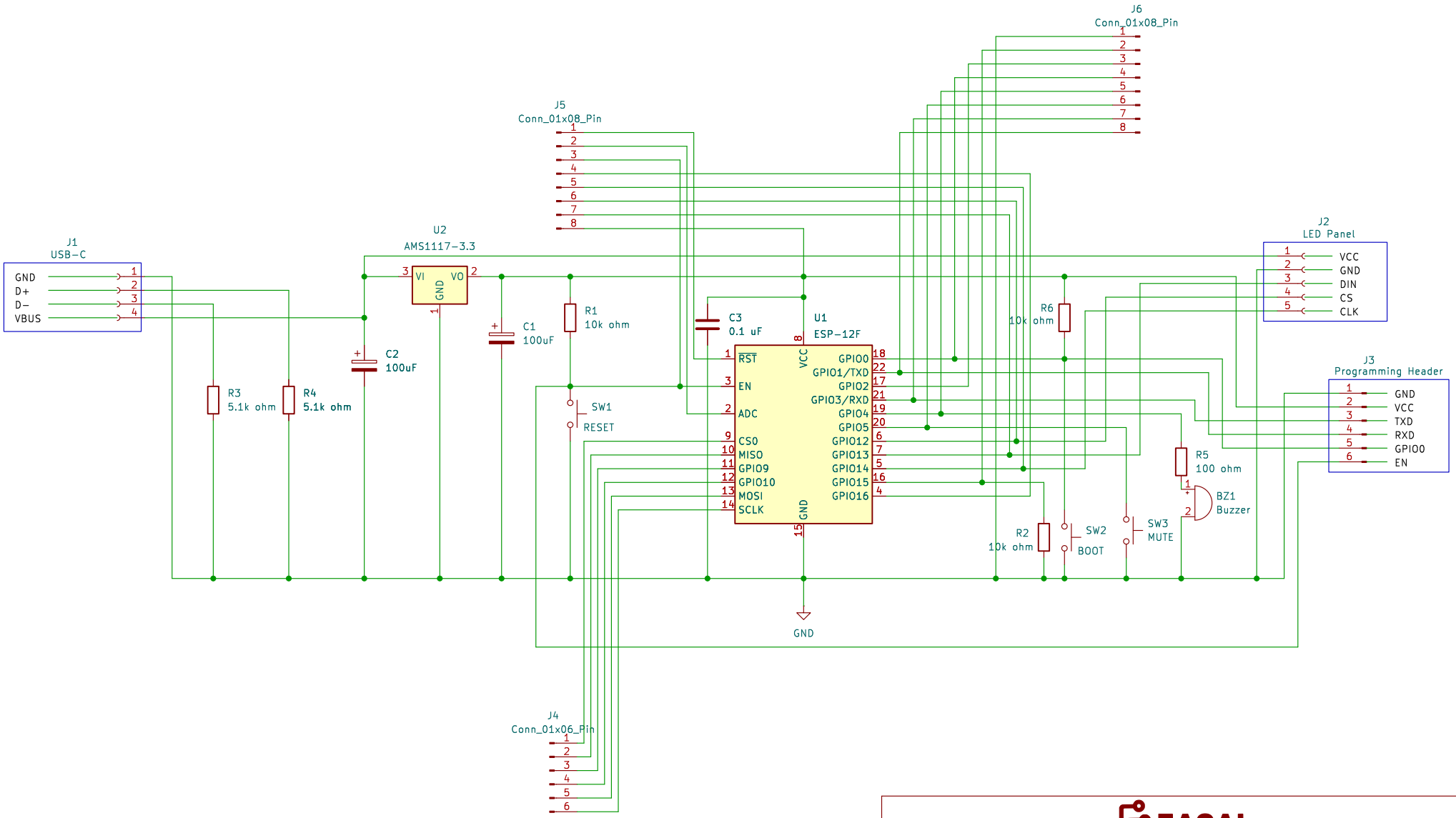

EASAI

Sheet: /
File: LED-Panel-ESP12F.kicad_sch

Title: LED Panel ESP32

Size: A4	Date: 2026-01-10	Rev: REV 1.0
KiCad E.D.A. 9.0.7		Id: 1/1