# AEW AUTOMATION SYSTEMS SOLUTIONS

(PG0466625-D)

WANSHSIN®
萬鑫精工

致力于打造世界一流的中国传动品牌

# Micro Gear Motor

# CONTENTS

# 微型减速机产品目录

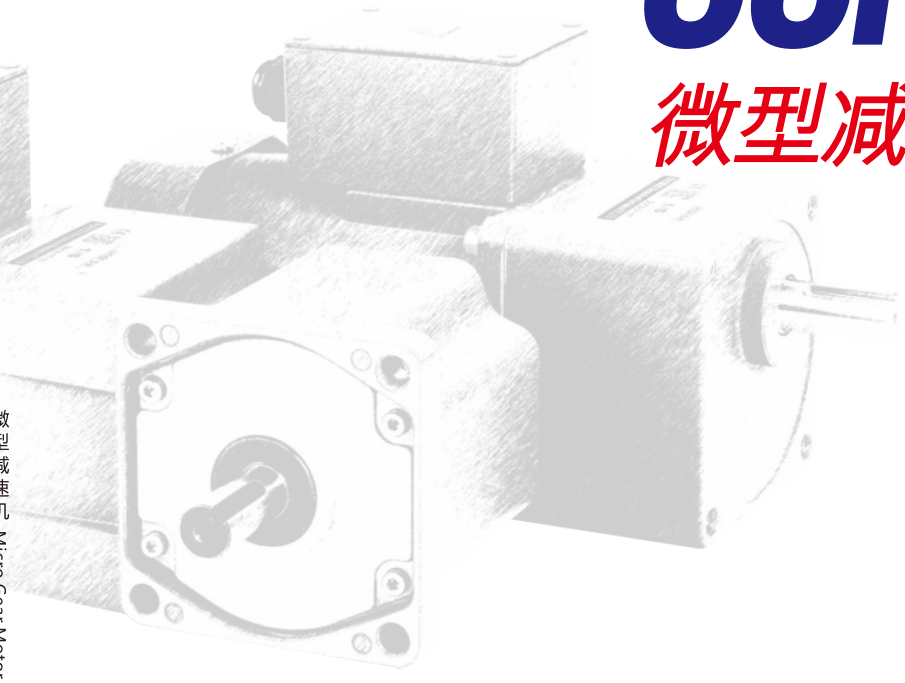

Committed to building a world-class transmission brand

微型减速机 Micro Gear Motor 2018年8月版

# COMPANY **PROFILE**

万鑫精工(湖南)有限公司（简称万鑫精工）是集研发、生产、销售、服务于一体的专业化减速电机企业，主要生产高精密减速电机，产品广泛应用于机器人、机床、立体停车库等轻工自动化设备。作为一家专注于减速电机的制造商及智能自动化全套方案提供商，万鑫精工引入国外先进加工设备，致力于为全球客户提供技术前沿、品质卓越的各类减速电机产品，是国内减速电机行业的优质品牌。

为满足国内外客户的需求，全面开启国际化战略布局，万鑫精工立志走“精鑫”强企强国之路，先后引入国内外多名高新技术人才加盟，更加重视现有产品的质量提升以及新产品的研发。在未来的发展中，万鑫精工将继续秉持着“致力于铸就世界一流的中国传动品牌”的信念与愿景，为助推世界工业智能化发展而奋斗！

WANSHSIN SEIKOU (HUNAN) CO., LTD. (hereafter referred to as “WANSHSIN”) is professional gear motor manufacturer integrates R&D, production ,sales and service. WANSHSIN mainly manufactures high-precision gear motors which are widely used in robots, machine tools, solid garages and other industrial automation. As a gear motor manufacturer and complete intelligent automation solutions provider, WANSHSIN introduced advanced import processing equipment, adopted advanced technology, to meet the strict high quality requirement for worldwide customers. All efforts made WANSHSIN a reputable and high quality brand in domestic gear motor industry.

To satisfy domestic and foreign customers' requirements, WANSHSIN fully opened the international strategic layout, determined to follow the path of building a strong enterprise for a stronger country, WANSHSIN pays more attention to the quality improvement of current products and development of new products, and successively introduced high-tech talents, both domestic and international. In the future, WANSHSIN will continuously keep the faith that “Committed to building a world-class transmission brand” and strive to the development of the industrial intelligent system of the world.

MICRO
**GEAR MOTOR**

INTERNAL
# STRUCTURE


01 订购方式 SELECTION
微型交流电机 Micro AC motor
微型直流电机 Micro DC motor

03 通用参数 GENERAL PARAMETERS
微型交流电机接线图及运行电容外形尺寸
Micro AC motor wiring diagram dimensions and running capacitor dimensions
微型直流电机接线图
Micro DC motor wiring diagram

04 微型交流电机 MICRO AC MOTOR
04 6W
各型号电机性能 Motor performance
减速箱减速比性能对照表
Reduction ratio performance chart
外形尺寸（CAD）Dimensions
06 15W
各型号电机性能 Motor performance
减速箱减速比性能对照表
Reduction ratio performance chart
外形尺寸（CAD）Dimensions
08 25W
各型号电机性能 Motor performance
减速箱减速比性能对照表
Reduction ratio performance chart
外形尺寸（CAD）Dimensions
16 40W/60W
各型号电机性能 Motor performance
减速箱减速比性能对照表
Reduction ratio performance chart
外形尺寸（CAD）Dimensions
20 90W/120W
各型号电机性能 Motor performance
减速箱减速比性能对照表
Reduction ratio performance chart
外形尺寸（CAD）Dimensions
26 140W/200W
各型号电机性能 Motor performance
减速箱减速比性能对照表
Reduction ratio performance chart
外形尺寸（CAD）Dimensions

29 调速器
SPEED CONTROLLER

33 微型直流电机 MICRO DC MOTOR
33 60DC
各型号电机性能 Motor performance
减速箱减速比性能对照表
Reduction ratio performance chart
外形尺寸（CAD）Dimensions
34 70DC
各型号电机性能 Motor performance
减速箱减速比性能对照表
Reduction ratio performance chart
外形尺寸（CAD）Dimensions
35 80DC
各型号电机性能 Motor performance
减速箱减速比性能对照表
Reduction ratio performance chart
外形尺寸（CAD）Dimensions
38 90DC
各型号电机性能 Motor performance
减速箱减速比性能对照表
Reduction ratio performance chart
外形尺寸（CAD）Dimensions
50 100DC
各型号电机性能 Motor performance
减速箱减速比性能对照表
Reduction ratio performance chart
外形尺寸（CAD）Dimensions

53 带接线盒减速电机选购指南
TERMINAL BOX DIRECTION

54 技术应用（说明及安装）
TECHNICAL APPLICATION
(Description and installation)

# MICRO GEAR MOTOR

# 微型减速机

# 订购方式

SELECTION

## 微型交流电机 MICRO AC MOTOR

### ■ 微型交流电机命名 MICRO AC MOTOR MODEL

60YS06WG/DV22□

1 2 3 4 5 6

**1 机座号 Stand Code**
60、70、80、90、100

**2 名称代号 Name Code**
YS: 标准电机 STANDARD MOTOR
YT: 调速电机 VARIABLE SPEED MOTOR
YB: 电磁制动电机
ELECTROMAGNETIC BRAKE MOTOR
YF: 调速电磁制动电机
VARIABLE SPEED ELECTROMAGNETIC BRAKE MOTOR
YR: 阻尼电机DAMPING MOTOR

**3 功率代号 Power Code**
06W、15W、25W、40W、60W 、90W、120W、140W、200W

**4 转子轴形式代号 Rotor shaft form Code**
G: 齿轴 GEAR SHAFT
D: 圆轴 ROUND SHAFT

**5 电压代号 Voltage Code**
V11: 单相SINGLE PHASE 110V
V22: 单相SINGLE PHASE 220V
Y22: 三相THREE PHASE 220V
Y38: 三相THREE PHASE 380V

**6 派生代号 Derived Code**
X: 引线式(线长300MM)
LEAD (LINE LENGTH 300 MM)
T: 带热保护器
WITH THERMAL PROTECTOR
H: 带接线盒
WITH TERMINAL BLOCK
FF: 带电子风扇（低温型）
WITH ELECTRONIC FAN
(LOW TEMPERATURE)

### ■ 减速箱型号命名 GEARBOX MODEL

60GK100H□

1 2 3 4 5

**1 机座号 Stand Code**
60、70、80、90、100、L80、L90、L100

**2 机型代号 Model Code**
GK: 6-25W减速箱GEARBOX
GF: 40-200W减速箱GEARBOX
GM:(80.90)中间减速箱
(80. 90) INTERMEDIATE GEARBOX

**3 减速比代号 Reduction ratio Code**
3、3.6… 200

**4 结构代号 Structure Code**
H：标准 STANDARD
HE：带耳型 EARED
RT：直角中实 RIGHT ANGLE SOLID
RC：直角中空 RIGHT ANGLE HOLLOW

**5 派生代号 Derived Code**
K：通孔 HOLE

### ■ 微型交流电机通用技术标准 MICRO AC MOTOR COMMON TECHNICAL STANDARDS

| | |
|---|---|
| 绝缘电阻 | 在常温，常湿下电机额定运转后，以DC500V兆欧表测量组与外壳的绝缘电阻应为100MΩ以上。 |
| 绝缘耐压 | 在常温，常湿下电机额定运转后，在绕组与外壳间施加50Hz或60Hz，1.5KV电压一分钟，无异常。 |
| 温升 | 在装上减速箱或同等散热板进行额定运转时，以电阻法测定其绕组温度上升值为75K以下。 |
| 绝缘等级 | F级（155℃） |
| 过热保护装置 | 可内加过热保护装置（自动复位型）动作温度：120℃±5℃复位温度：82℃±15℃(此功能需定） |
| 使用环境温度 | -10℃~+40℃(无冻结) |
| 使用环境湿度 | 85%以下(无结露) |

INSULATION RESISTANCE: After running at rated settings under normal temperature and humidity, the insulation resistance between the winding and the shell of the motor measured with a DC500V megger should be more than 100MΩ.

INSULATION VOLTAGE: After running at rated settings under normal temperature and humidity, apply 50Hz or 60Hz, 1.5KV between the winding and the shell for one minute, and the motor is normal.

TEMPERATURE RISE: When running at rated settings with gearbox or equivalent heat radiating plate installed, the temperature rise of the winding measured in resistance method is 75K or less.

INSULATION CLASS: F (155℃)

OVERHEATING PROTECTION DEVICE: With built-in thermal protection device (automatic reset type); operating temperature: 120±5℃; reset temperature: 82±15℃ (this feature should be customized)

AMBIENT TEMPERATURE:-10℃~+40℃(no freezing)

AMBIENT HUMIDITY:Below 85%(no condensation)

# 微型直流电机 MICRO DC MOTOR

## ■ 微型直流电机命名 MICRO DC MOTOR MODEL

60DC20GV24R16□

1 2 3 4 5 6 7

**1 机座号**
Stand Code
60、70、80、90、100

**3 功率代号**
Power Code
10W、15W、20W、30W、
40W、60W、65W、70W、100W、
120W、200W、300W

**5 电压代号**
Voltage Code
V12、V24、V90、V180

**7 派生代号**
Derived Code
X: 引线式(线长300MM) LEAD (LINE LENGTH 300 MM)

**2 DC直流电机系列**
DC motor series
DC

**4 转子轴形式代号**
Rotor shaft form Code
G: 齿轮 GEAR SHAFT
D: 圆轴 ROUND SHAFT

**6 转速**
Speed
R16: 1600r/min
R18: 1800r/min

## ■ 微型直流电机通用技术标准 MICRO DC MOTOR COMMON TECHNICAL STANDARDS

| | |
|---|---|
| 绝缘电阻 | 在常温常湿下，运转电机后，以DC500V的绝缘电阻来测量的金属线圈和电机外壳之间的绝缘电阻时，不小于100兆欧。 |
| 绝缘电压 | 在常温，常湿下，运转电机后，在电机的金属线圈和电机外壳之间，以1500V、50/60Hz，施压1分钟时没有任何问题。 |
| 温度上升 | 运转电机后，用电阻法来测量时，线圈组温度的上升数值在80℃以下。 |
| 绝缘等级 | B级（130℃) |
| 使用温度 | -10℃~+40℃(冰冻) |
| 使用湿度 | 85%以下(没有结露的场所) |

INSULATION RESISTANCE: After running under normal temperature and humidity, the insulation resistance between the metal coil and the shell of the motor measured with a DC500V megger should be more than 100MΩ.

INSULATION VOLTAGE: After running under normal temperature and humidity, apply 1500V, 50/60Hz between the metal coil and the shell for one minute, and the motor is normal.

TEMPERATURE RISE: After running the motor, the temperature rise of the coil winding measured in resistance method is 80℃ or less.

INSULATION CLASS: B (130℃)

OPERATING TEMPERATURE: -10~40℃ (no freezing)

AMBIENT HUMIDITY:Under 85%(no condensation)

# 通用参数

## GENERAL PARAMETERS

### 微型交流电机接线圈及运行电容外型尺寸 MICRO AC MOTOR WIRING DIAGRAM DIMENSIONS AND RUNNING CAPACITOR DIMENSIONS

齿轮轴
GEAR SHAFT

圆轴
ROUND SHAFT

接线图
Wiring diagram dimensions

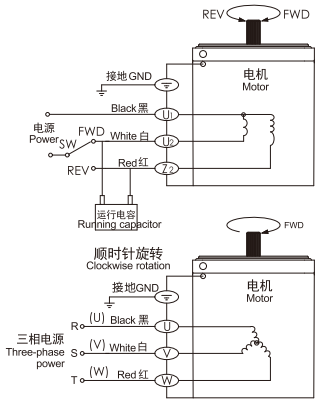


●顺时针旋转 CLOCKWISE ROTATION
将开关(SW)切换至FWD侧，则电机做顺时针旋转。
Turn the switch (SW) to FWD and the motor rotates clockwise.

●逆时针旋转 COUNTERCLOCKWISE ROTATION
将开关(SW)切换至REV侧，则电机做逆时针旋转；
若兑换U、V、W中任意两条，则电机做逆时针旋转。
Turn the switch (SW) to REV and the motor rotates counterclockwise; If any two of U, V and W are exchanged,

⚠注意 NOTE

- 旋转方向是指面对电机输出端，顺时针旋转为FWD，逆时针旋转为REV。
- 单相电机旋转方向的切换作业应在电机停止后进行。
- 切换旋转方向时，须等电机完全停止后进行，否则将可能无法切换旋转方向或是需花费较长时间方可切换。
- Rotation direction is facing the motor output terminal. The clockwise direction is FWD, and the counterclockwise direction is REV.
- The rotation direction of single phase motor should be switched when the motor is stopped.
- Switch the rotation direction only when the motor has stopped, or else it may be impossible to change or take longer time.

运行电容(单相电机附件)外形尺寸
Running capacitor (single phase motor accessories)dimensions

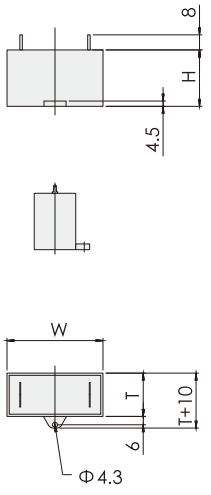


| 型号 MODEL | 电容/电压 CAPACITANCE VOLTAGE | 外形尺寸 DIMENSIONS | | |
|---|---|---|---|---|
| | | W | T | H |
| 6W | 0.8μf/450V | 37 | 11 | 25 |
| | 3 μf/250V | 37 | 16 | 30 |
| 15W | 1.5μf/450V | 37 | 11 | 25 |
| | 6μf/250V | 47 | 18 | 35 |
| 25W | 2μf/450V | 37 | 16 | 30 |
| | 8μf/250V | 47 | 20 | 37 |
| 40W | 3μf/450V | 48 | 20 | 31 |
| | 12μf/250V | 59 | 27 | 38 |
| 60W | 4μf/450V | 48 | 20 | 32 |
| | 16μf/250V | 58 | 28 | 50 |
| 90W | 5μf/450V | 47 | 20 | 37 |
| | 20μf/250V | 59 | 30 | 50 |
| 120W | 6μf/450V | 47 | 20 | 37 |
| | 24μf/250V | 59 | 30 | 50 |
| 140W | 8μf/450V | 47 | 23 | 41 |
| | 32μf/250V | 60 | 30 | 50 |
| 200W | 10μf/450V | 59 | 27 | 38 |
| | 40μf/250V | 70 | 40 | 55 |

### 微型直流电机接线图 MICRO DC MOTOR WIRING DIAGRAM DIMENSIONS

齿轮轴
GEAR SHAFT

圆轴
ROUND SHAFT

接线图 Wiring diagram dimensions

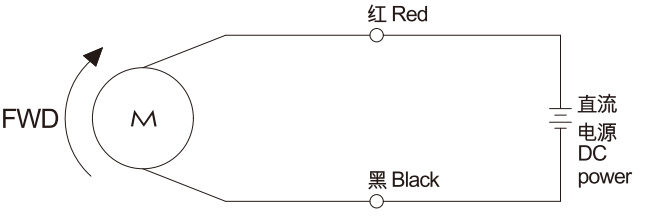


- 电机给引线长度为300mm
- The length of motor lead is about 300mm

# 微型交流电机

## MICRO AC MOTOR

**6W**

□60×60mm

## 各型号电机性能 MOTOR PERFORMANCE

| 型号 MODEL | | 最大输出功率(W) MAXIMUM OUTPUT POWER | 电压V VOLTAGE | 频率Hz FREQUENCY | 电流A CURRENT | 调速范围 r/min SPEED RANGE | 起动转矩 mN·m START TORQUE | 额定转矩(mN·m) RATED TORQUE 1200r/min | 90r/min | 运行电容 RUNNING CAPACITOR |
|---|---|---|---|---|---|---|---|---|---|---|
| 齿轮轴 GEAR SHAFT | 60YS06GV11<br>60YR06GV11<br>60YT06GV11<br>60YB06GV11 | 6 | Single phase 单相 110 | 50Hz | 0.23 | 90-1300 | 38 | 47 | 30 | 3μf/250V |
| 圆轴 ROUND SHAFT | 60YS06DV11<br>60YR06DV11<br>60YT06DV11<br>60YB06DV11 | | | 60Hz | 0.21 | 90-1600 | 40 | 50 | 30 | |
| 齿轮轴 GEAR SHAFT | 60YS06GV22<br>60YR06GV22<br>60YT06GV22<br>60YB06GV22 | 6 | Single phase 单相 220 | 50Hz | 0.11 | 90-1300 | 38 | 47 | 32 | 0.8μf/450V |
| 圆轴 ROUND SHAFT | 60YS06DV22<br>60YR06DV22<br>60YT06DV22<br>60YB06DV22 | | | 60Hz | 0.10 | 90-1600 | 40 | 50 | 32 | |

▪虽然调速电机的调速范围为：50Hz…90~1300r/min；60Hz…90~1600r/min。但由于低速时(＜400r/min)，电机转矩下降较多，易发生过载，且电机直连风扇冷却效果差，易发热，因此必须预留足够的功率余量，并且不要经常工作在低速区。因此电机最佳调速范围为：50Hz…400~1300r/min；60Hz…400~1600r/min。

▪在断开电源的同时，电机会瞬间停止关保持负载。

▪Although the speed range of the motor is 50Hz, 90~1300r/min, 60Hz, 90~1600r/min, it easily causes overload and the cooling effect of the motor fan is poor if the speed is too low (<400r/min) and the motor torque decreases too much; therefore, please keep sufficient power margin and avoid operating in low speed section frequently. The optimal speed range of the motor is 50Hz, 400~1300r/min, 60Hz, 400~1600r/min.

▪When the power is cut off, the motor will stop immediately and hold the load.

## 减速箱减速比性能对照表 REDUCTION RATIO PERFORMANCE CHART

| 减速比 REDUCTION RATIO | | 3 | 3.6 | 5 | 6 | 7.5 | 10 | 12.5 | 15 | 18 | 20 | 25 | 30 |
|---|---|---|---|---|---|---|---|---|---|---|---|---|---|
| 50Hz | 最高转速r/min Max output speed | 433 | 361 | 260 | 217 | 173 | 130 | 104 | 87 | 72 | 65 | 52 | 43 |
| | 额定转矩N·m Rated torque | 0.13 | 0.15 | 0.22 | 0.26 | 0.33 | 0.44 | 0.55 | 0.66 | 0.79 | 0.88 | 1.10 | 1.32 |
| 60Hz | 最高转速r/min Max output speed | 533 | 444 | 320 | 267 | 213 | 160 | 128 | 107 | 89 | 80 | 64 | 53 |
| | 额定转矩N·m Rated torque | 0.11 | 0.13 | 0.18 | 0.22 | 0.28 | 0.37 | 0.46 | 0.55 | 0.66 | 0.73 | 0.92 | 1.10 |
| 减速比 REDUCTION RATIO | | 36 | 40 | 50 | 60 | 75 | 90 | 100 | 120 | 150 | 180 | 200 | |
| 50Hz | 最高转速r/min Max output speed | 36 | 33 | 26 | 22 | 17 | 14 | 13 | 11 | 9 | 7 | 7 | |
| | 额定转矩N·m Rated torque | 1.59 | 1.76 | 2.06 | 2.18 | 2.42 | 3 | 3 | 3 | 3 | 3 | 3 | |
| 60Hz | 最高转速r/min Max output speed | 44 | 40 | 32 | 27 | 21 | 18 | 16 | 13 | 11 | 9 | 8 | |
| | 额定转矩N·m Rated torque | 1.33 | 1.47 | 1.71 | 1.82 | 2.02 | 2.42 | 2.65 | 3 | 3 | 3 | 3 | |

▪表中转速是以电机的平均转速(50Hz:1300r/min、60Hz:1600r/min)为基数除以减速比而算出的数值。

▪实际转速随负载大小而少量变化，变化范围为±8%左右。

▪The speed in the table is the value of average motor speed (50Hz: 1300r/min, 60Hz: 1600r/min) divided by the reduction ratio.

▪The actual speed changes according to the load (±8%).

标准减速箱
STANDARD GEARBOX
60GK □H

减速箱型号中的□为减速比的数值
速比：1:3~200
□ in gearbox model indicates the reduction ratio (1:3~200)

# 外形尺寸(CAD) DIMENSIONS

## 6YS/YR01

圆轴电机 重量:0.8kg

Round-axis motor,weight:0.8kg

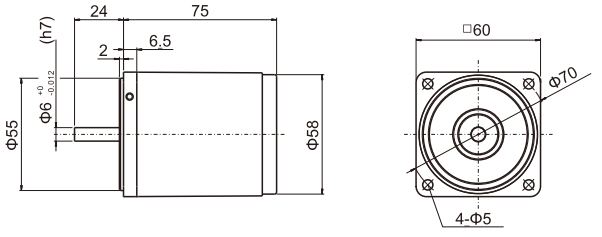


## 6YS/YR02

组合:电机+标准减速机(减速比:1:3~200) 重量:1.1kg

Combination:motor+standard gearbox(reduction ratio:1:3~200), weight:1.1kg

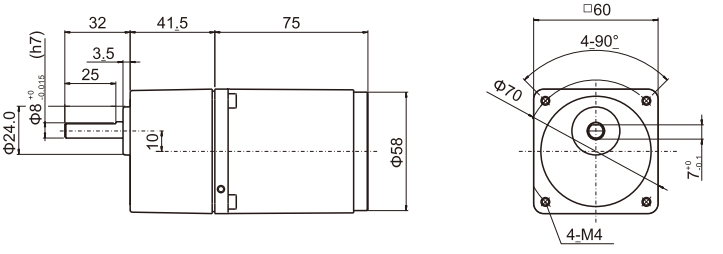


## 6YT01

圆轴电机 重量:0.9kg

Round-axis motor,weight:0.9kg

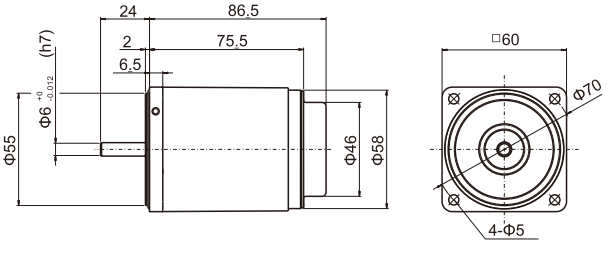


## 6YT02

组合:电机+标准减速机(减速比:1:3~200) 重量:1.1kg

Combination:motor+standard gearbox(reduction ratio:1:3~200), weight:1.1kg

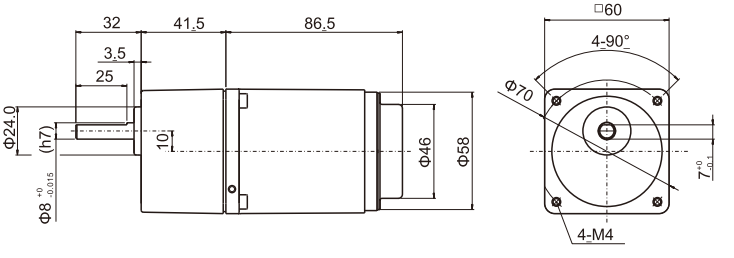


## 6YB01

圆轴电机 重量:1.2kg

Round-axis motor,weight:1.2kg

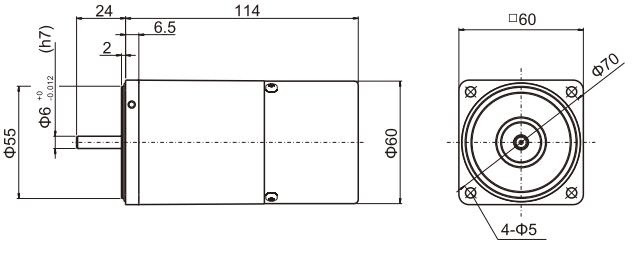


## 6YB02

组合:电机+标准减速机(减速比:1:3~200) 重量:1.5kg

Combination:motor+standard gearbox(reduction ratio:1:3~200), weight:1.5kg

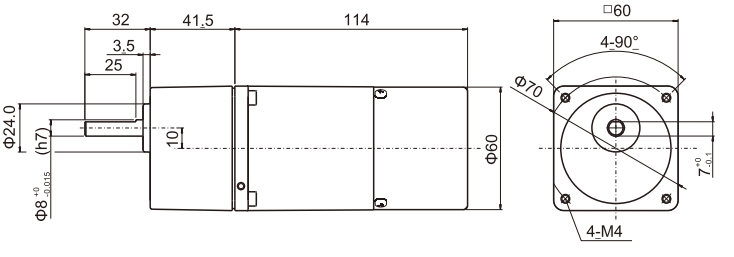

# 15W

□70×70mm

## 各型号电机性能 MOTOR PERFORMANCE

| 型号 MODEL | | 最大输出功率(W) MAXIMUM OUTPUT POWER | 电压V VOLTAGE | 频率Hz FREQUENCY | 电流A CURRENT | 调速范围 r/min SPEED RANGE | 起动转矩 mN·m START TORQUE | 额定转矩(mN·m) RATED TORQUE 1200r/min | 90r/min | 运行电容 RUNNING CAPACITOR |
|---|---|---|---|---|---|---|---|---|---|---|
| 齿轮轴 GEAR SHAFT | 70YS15GV11 70YR15GV11 70YT15GV11 70YB15GV11 | 15 | Single phase 单相 110 | 50Hz | 0.39 | 90-1300 | 70 | 125 | 45 | 6μf/250V |
| 圆轴 ROUND SHAFT | 70YS15DV11 70YR15DV11 70YT15DV11 70YB15DV11 | | | 60Hz | 0.35 | 90-1600 | 65 | 125 | 45 | |
| 齿轮轴 GEAR SHAFT | 70YS15GV22 70YR15GV22 70YT15GV22 70YB15GV22 | 15 | Single phase 单相 220 | 50Hz | 0.20 | 90-1300 | 70 | 125 | 40 | 1.5μf/450V |
| 圆轴 ROUND SHAFT | 70YS15DV22 70YR15DV22 70YT15DV22 70YB15DV22 | | | 60Hz | 0.17 | 90-1600 | 65 | 125 | 40 | |

▪虽然调速电机的调速范围为：50Hz…90~1300r/min；60Hz…90~1600r/min。但由于低速时(＜400r/min)，电机转矩下降较多，易发生过载，且电机直连风扇冷却效果差，易发热，因此必须预留足够的功率余量，并且不要经常工作在低速区。因此电机最佳调速范围为：50Hz…400~1300r/min；60Hz…400~1600r/min。

▪在断开电源的同时，电机会瞬间停止关保持负载。

▪Although the speed range of the motor is 50Hz, 90~1300r/min, 60Hz, 90~1600r/min, it easily causes overload and the cooling effect of the motor fan is poor if the speed is too low (<400r/min) and the motor torque decreases too much; therefore, please keep sufficient power margin and avoid operating in low speed section frequently. The optimal speed range of the motor is 50Hz, 400~1300r/min, 60Hz, 400~1600r/min.

▪When the power is cut off, the motor will stop immediately and hold the load.

## 减速箱减速比性能对照表 REDUCTION RATIO PERFORMANCE CHART

| 减速比 REDUCTION RATIO | | 3 | 3.6 | 5 | 6 | 7.5 | 10 | 12.5 | 15 | 18 | 20 | 25 | 30 |
|---|---|---|---|---|---|---|---|---|---|---|---|---|---|
| 50Hz | 最高转速r/min Max output speed | 433 | 361 | 260 | 217 | 173 | 130 | 104 | 87 | 72 | 65 | 52 | 43 |
| | 额定转矩N·m Rated torque | 0.30 | 0.36 | 0.50 | 0.60 | 0.74 | 0.99 | 1.24 | 1.49 | 1.79 | 1.98 | 2.31 | 2.78 |
| 60Hz | 最高转速r/min Max output speed | 533 | 444 | 320 | 267 | 213 | 160 | 128 | 107 | 89 | 80 | 64 | 53 |
| | 额定转矩N·m Rated torque | 0.25 | 0.30 | 0.41 | 0.50 | 0.62 | 0.83 | 1.03 | 1.24 | 1.49 | 1.65 | 1.93 | 2.31 |
| 减速比 REDUCTION RATIO | | 36 | 40 | 50 | 60 | 75 | 90 | 100 | 120 | 150 | 180 | 200 | |
| 50Hz | 最高转速r/min Max output speed | 36 | 33 | 26 | 22 | 17 | 14 | 13 | 11 | 9 | 7 | 7 | |
| | 额定转矩N·m Rated torque | 3.33 | 3.70 | 4.63 | 5 | 5 | 5 | 5 | 5 | 5 | 5 | 5 | |
| 60Hz | 最高转速r/min Max output speed | 44 | 40 | 32 | 27 | 21 | 18 | 16 | 13 | 11 | 9 | 8 | |
| | 额定转矩N·m Rated torque | 2.78 | 3.09 | 3.86 | 4.35 | 5 | 5 | 5 | 5 | 5 | 5 | 5 | |

▪表中转速是以电机的平均转速(50Hz:1300r/min、60Hz:1600r/min)为基数除以减速比而算出的数值。

▪实际转速随负载大小而少量变化，变化范围为±8%左右。

▪The speed in the table is the value of average motor speed (50Hz: 1300r/min, 60Hz: 1600r/min) divided by the reduction ratio.

▪The actual speed changes according to the load (±8%).

标准减速箱
STANDARD GEARBOX
70GK □H

减速箱型号中的□为减速比的数值
速比：1:3~200
□ in gearbox model indicates the reduction ratio (1:3~200)

# 外形尺寸(CAD) DIMENSIONS

## 15YS/YR01

圆轴电机 重量:1.1kg

Round-axis motor,weight:1.1kg

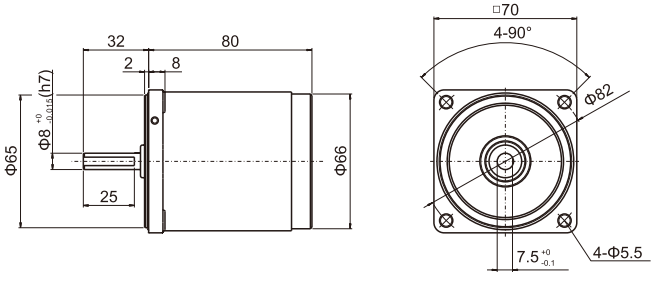


## 15YS/YR02

组合:电机+标准减速机(减速比:1:3~200) 重量:1.6kg

Combination:motor+standard gearbox(reduction ratio:1:3~200), weight:1.6kg

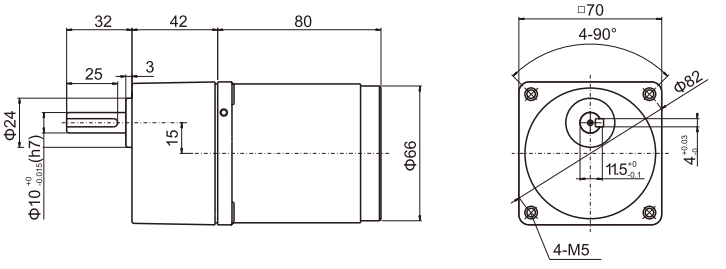


## 15YT01

圆轴电机 重量:0.9kg

Round-axis motor,weight:0.9kg

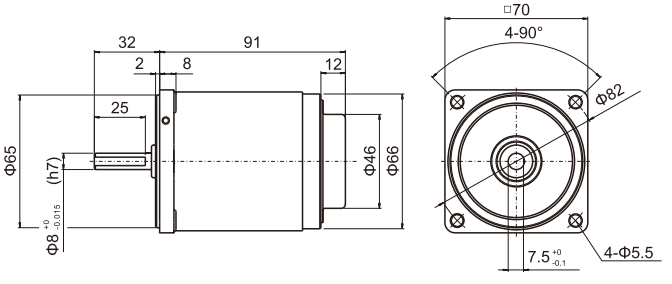


## 15YT02

组合:电机+标准减速机(减速比:1:3~200) 重量:1.2kg

Combination:motor+standard gearbox(reduction ratio:1:3~200), weight:1.2kg

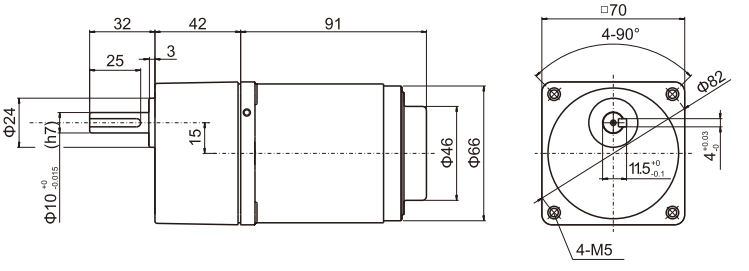


## 15YB01

圆轴电机 重量:1.1kg

Round-axis motor,weight:1.1kg

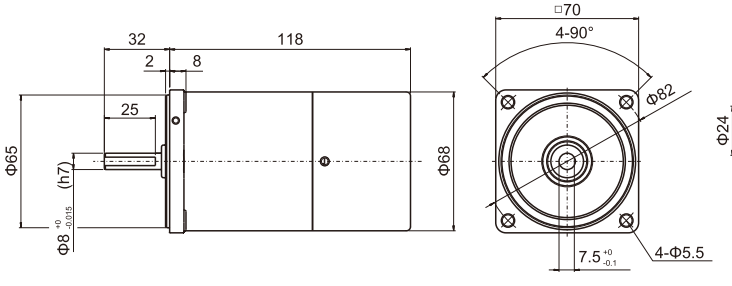


## 15YB02

组合:电机+标准减速机(减速比:1:3~200) 重量:2kg

Combination:motor+standard gearbox(reduction ratio:1:3~200), weight:2kg

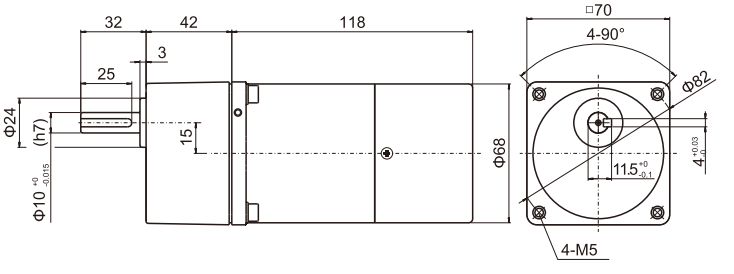

# 25W

□80×80mm

## 各型号电机性能 MOTOR PERFORMANCE

| 型号 MODEL | | 最大输出功率(W) MAXIMUM OUTPUT POWER | 电压V VOLTAGE | 频率Hz FREQUENCY | 电流A CURRENT | 调速范围 r/min SPEED RANGE | 起动转矩 mN·m START TORQUE | 额定转矩(mN·m) RATED TORQUE 1200r/min | 额定转矩(mN·m) RATED TORQUE 90r/min | 运行电容 RUNNING CAPACITOR |
|---|---|---|---|---|---|---|---|---|---|---|
| 齿轮轴 GEAR SHAFT | 80YS25GV11<br>80YR25GV11<br>80YT25GV11<br>80YB25GV11 | 25 | Single phase 单相 110 | 50Hz | 0.53 | 90-1300 | 145 | 170 | 45 | 8μf/250V |
| 圆轴 ROUND SHAFT | 80YS25DV11<br>80YR25DV11<br>80YT25DV11<br>80YB25DV11 | | | 60Hz | 0.48 | 90-1600 | 120 | 170 | 45 | |
| 齿轮轴 GEAR SHAFT | 80YS25GV22<br>80YR25GV22<br>80YT25GV22<br>80YB25GV22 | 25 | Single phase 单相 220 | 50Hz | 0.25 | 90-1300 | 145 | 205 | 50 | 2μf/450V |
| 圆轴 ROUND SHAFT | 80YS25DV22<br>80YR25DV22<br>80YT25DV22<br>80YB25DV22 | | | 60Hz | 0.23 | 90-1600 | 120 | 205 | 50 | |
| 齿轮轴 GEAR SHAFT | 80YS25GY22<br>80YB25GY22 | 25 | Three phase 三相 220 | 50Hz | 0.25 | 90-1300 | 250 | 195 | | |
| 圆轴 ROUND SHAFT | 80YS25DY22<br>80YB25DY22 | | | 60Hz | 0.23 | 90-1600 | 205 | 160 | | |
| 齿轮轴 GEAR SHAFT | 80YS25GY38<br>80YB25GY38 | 25 | Three phase 三相 380 | 50Hz | 0.14 | 90-1300 | 250 | 195 | | |
| 圆轴 ROUND SHAFT | 80YS25DY38<br>80YB25DY38 | | | 60Hz | 0.13 | 90-1600 | 205 | 160 | | |

▪虽然调速电机的调速范围为：50Hz…90~1300r/min；60Hz…90~1600r/min。但由于低速时(＜400r/min)，电机转矩下降较多，易发生过载，且电机直连风扇冷却效果差，易发热，因此必须预留足够的功率余量，并且不要经常工作在低速区。因此电机最佳调速范围为：50Hz…400~1300r/min；60Hz…400~1600r/min。

▪在断开电源的同时，电机会瞬间停止关保持负载。

▪Although the speed range of the motor is 50Hz, 90~1300r/min, 60Hz, 90~1600r/min, it easily causes overload and the cooling effect of the motor fan is poor if the speed is too low (<400r/min) and the motor torque decreases too much; therefore, please keep sufficient power margin and avoid operating in low speed section frequently. The optimal speed range of the motor is 50Hz, 400~1300r/min, 60Hz, 400~1600r/min.

▪When the power is cut off, the motor will stop immediately and hold the load.

## 减速箱减速比性能对照表 REDUCTION RATIO PERFORMANCE CHART

| 减速比 REDUCTION RATIO | | 3 | 3.6 | 5 | 6 | 7.5 | 10 | 12.5 | 15 | 18 | 20 | 25 | 30 |
|---|---|---|---|---|---|---|---|---|---|---|---|---|---|
| 50Hz | 最高转速r/min Max output speed | 433 | 361 | 260 | 217 | 173 | 130 | 104 | 87 | 72 | 65 | 52 | 43 |
| | 额定转矩N·m Rated torque | 0.50 | 0.60 | 0.83 | 0.99 | 1.24 | 1.65 | 1.95 | 2.34 | 2.81 | 3.12 | 3.90 | 4.68 |
| 60Hz | 最高转速r/min Max output speed | 533 | 444 | 320 | 267 | 213 | 160 | 128 | 107 | 89 | 80 | 64 | 53 |
| | 额定转矩N·m Rated torque | 0.41 | 0.50 | 0.69 | 0.83 | 1.03 | 1.38 | 1.63 | 1.95 | 2.34 | 2.60 | 3.25 | 3.90 |
| 减速比 REDUCTION RATIO | | 36 | 40 | 50 | 60 | 75 | 90 | 100 | 120 | 150 | 180 | 200 | |
| 50Hz | 最高转速r/min Max output speed | 36 | 33 | 26 | 22 | 17 | 14 | 13 | 11 | 9 | 7 | 7 | |
| | 额定转矩N·m Rated torque | 5.62 | 6.24 | 6.89 | 8 | 8 | 8 | 8 | 8 | 8 | 8 | 8 | |
| 60Hz | 最高转速r/min Max output speed | 44 | 40 | 32 | 27 | 21 | 18 | 16 | 13 | 11 | 9 | 8 | |
| | 额定转矩N·m Rated torque | 4.68 | 5.20 | 5.74 | 6.88 | 8 | 8 | 8 | 8 | 8 | 8 | 8 | |

▪表中转速是以电机的平均转速(50Hz:1300r/min、60Hz:1600r/min)为基数除以减速比而算出的数值。
▪实际转速随负载大小而少量变化，变化范围为±8%左右。
▪The speed in the table is the value of average motor speed (50Hz: 1300r/min, 60Hz: 1600r/min) divided by the reduction ratio.
▪The actual speed changes according to the load (±8%).

标准减速箱
STANDARD GEARBOX
80GK □H

直角中空减速箱
RIGHT ANGLE HOLLOW GEARBOX
L80GK □RC

中间减速箱
INTERMEDIATE GEARBOX
80GM10

直角中实减速箱
RIGHT ANGLE SOLID GEARBOX
L80GK □RT

减速箱型号中的□为减速比的数值
速比：1:3~200;中间减速箱：( 1 : 10 )
□ in gearbox model indicates the reduction ratio (1:3~200);intermediate gearbox:( 1 : 10 )

# 外形尺寸 (CAD) DIMENSIONS

## 25YS/YR01

圆轴电机 重量:1.6kg
Round-axis motor,weight:1.6kg

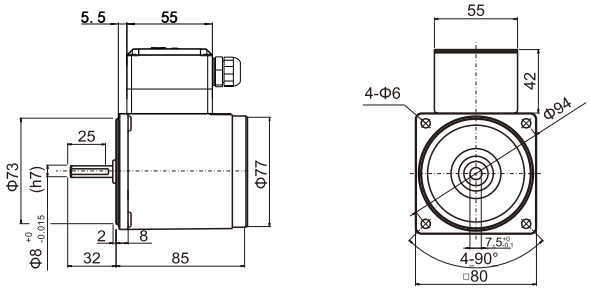


## 25YS/YR02

组合:电机+标准减速机(减速比:1:3~200) 重量:2.3kg
Combination:motor+standard gearbox(reduction ratio:1:3~200), weight:2.3kg

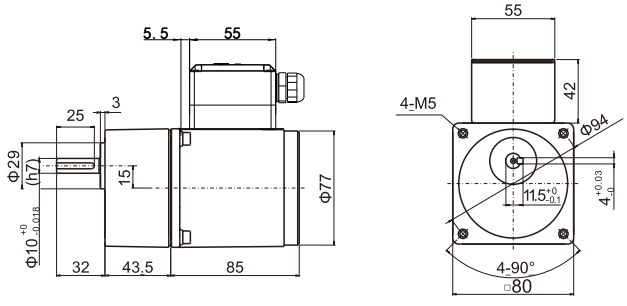


## 25YS/YR03

组合:电机+中间减速箱+标准减速机(减速比:1:200~1800) 重量:2.8kg
Combination:motor+Intermediate gearbox+standard gearbox(reduction ratio:1:200~1800),weight:2.8kg

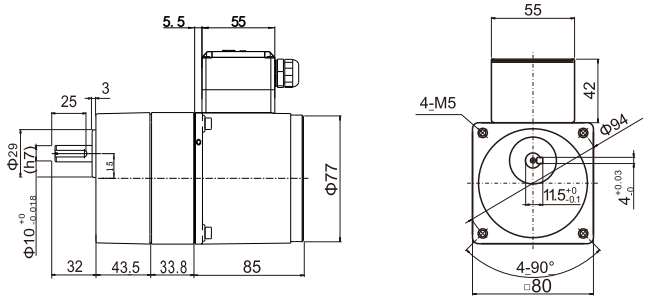


## 25YS/YR04

组合:电机+直角中实减速箱(减速比:1:3~200) 重量:3.8kg
Combination:motor+right angle solid gearbox(reduction ratio:1:3~200), weight:3.8kg

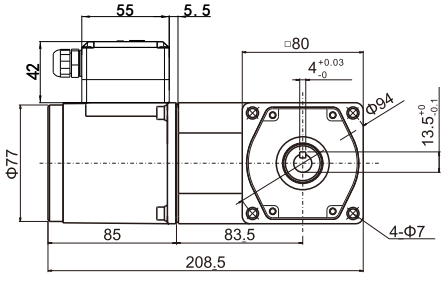


## 25YS/YR05

组合:电机+中间减速箱+直角中实减速箱
(减速比:1:200~1800) 重量:4.3kg
Combination:motor+intermediate gearbox+right angle solid gearbox(reduction ratio:1:200~1800),weight:4.3kg

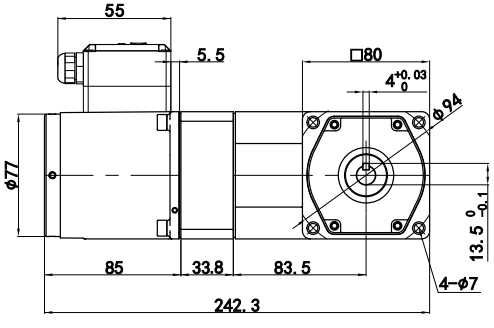

## 外形尺寸(CAD)DIMENSIONS

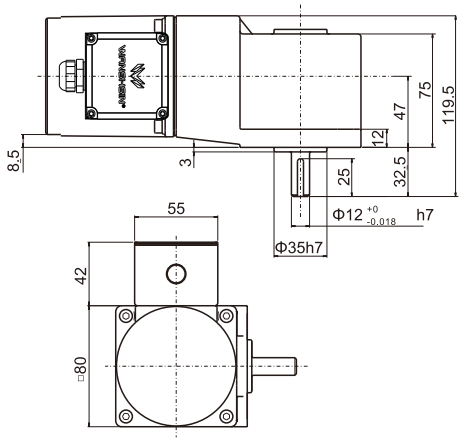


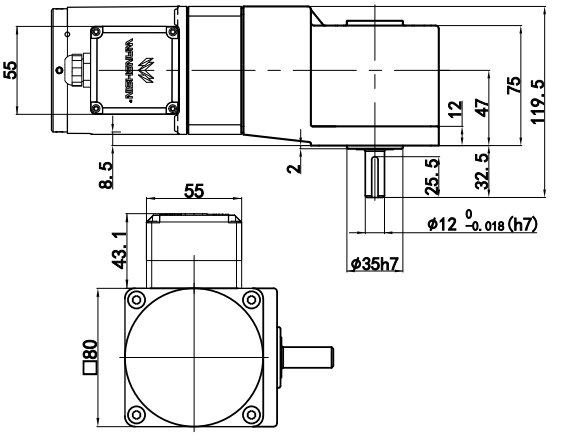


### 25YS/YR06

组合:电机+直角中空减速箱(减速比:1:3~200)重量:3.7kg
Combination:motor+right angle hollow gearbox(reduction ratio:1:3~200), weight:3.7kg

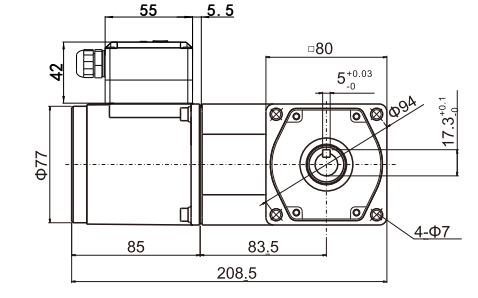


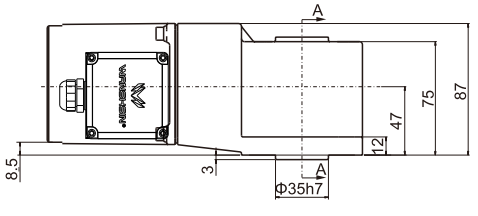


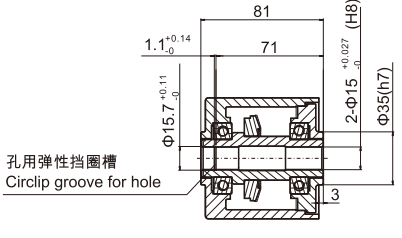


A-A
1:1

### 25YS/YR07

组合:电机+中间减速箱+直角中空减速箱
(减速比:1:200~1800)重量:4.2kg
Combination:motor+intermediate gearbox+right angle hollow gearbox (reduction ratio:1:200~1800),weight:4.2kg

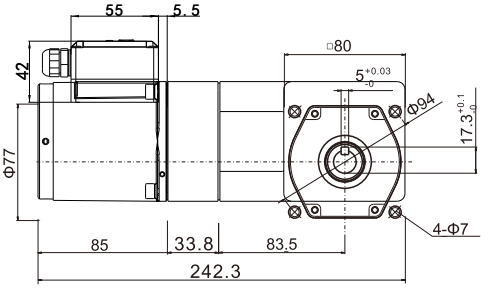


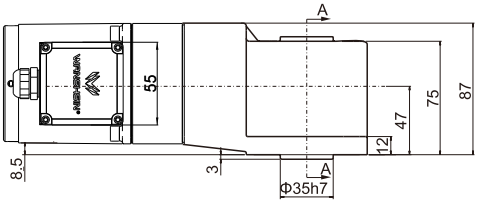


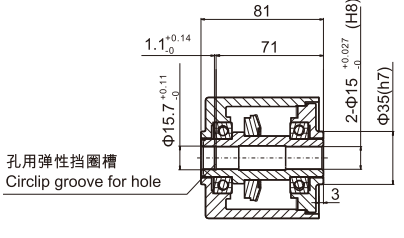


A-A
1:1

# 外形尺寸 (CAD) DIMENSIONS

## 25YT01

圆轴电机 重量:1.7kg

Round-axis motor,weight:1.7kg

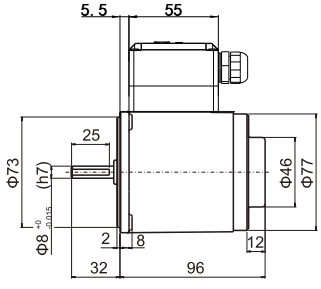


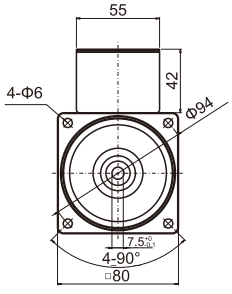


## 25YT02

组合:电机+标准减速机(减速比:1:3~200) 重量:2.4kg

Combination:motor+standard gearbox(reduction ratio:1:3~200), weight:2.4kg

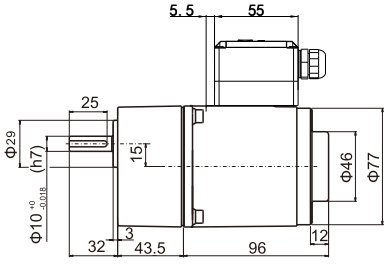


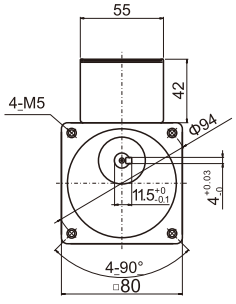


## 25YT03

组合:电机+中间减速箱+标准减速机(减速比:1:200~1800) 重量:2.9kg

Combination:motor+intermediate gearbox+standard gearbox(reduction ratio:1:200~1800),weight:2.9kg

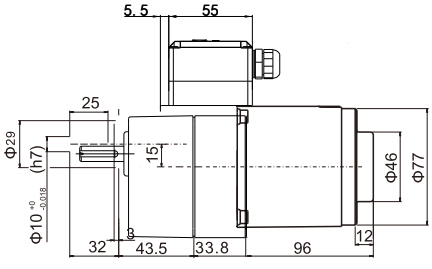


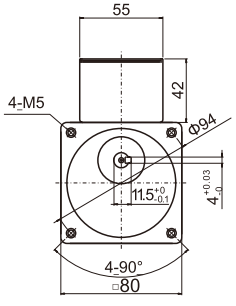


## 25YT04

组合:电机+直角中实减速箱(减速比:1:3~200) 重量:3.8kg

Combination:motor+right angle solid gearbox(reduction ratio:1:3~200), weight:3.8kg

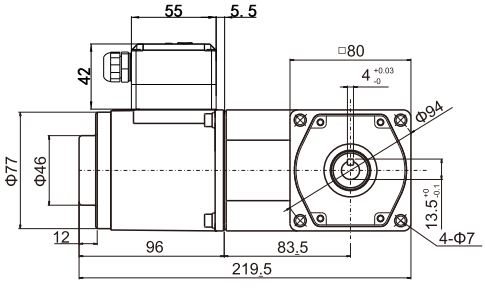


## 25YT05

组合:电机+中间减速箱+直角中实减速箱
(减速比:1:200~1800) 重量:4.3kg

Combination:motor+intermediate gearbox+right angle solid gearbox(reduction ratio:1:200~1800),weight:4.3kg

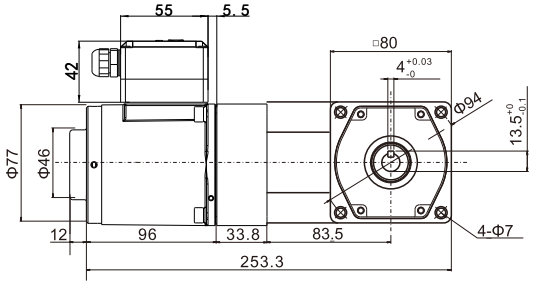

## 外形尺寸(CAD)DIMENSIONS

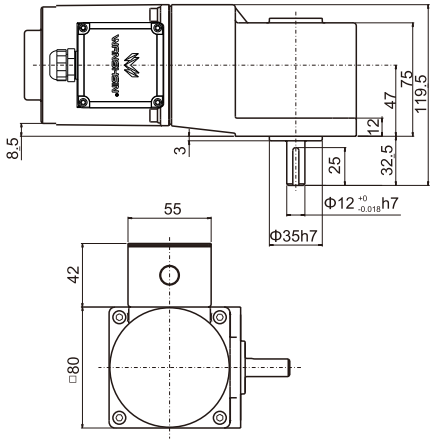


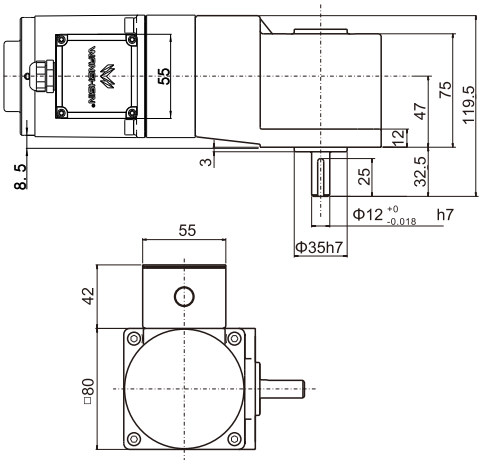


### 25YT06

组合:电机+直角中空减速箱(减速比:1:3~200) 重量:3.7kg

Combination:motor+right angle hollow gearbox(reduction ratio:1:3~200), weight:3.7kg

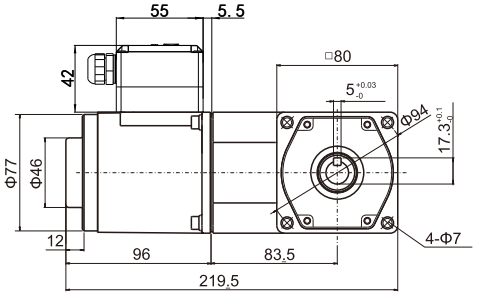


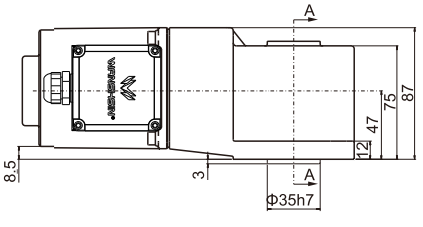


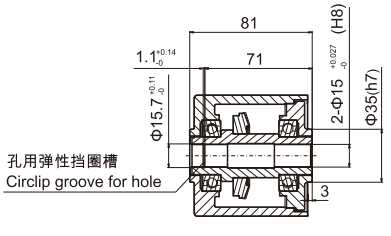


### 25YT07

组合:电机+中间减速箱+直角中空减速箱
(减速比:1:200~1800) 重量:4.2kg

Combination:motor+intermediate gearbox+right angle hollow gearbox (reduction ratio:1:200~1800),weight:4.2kg

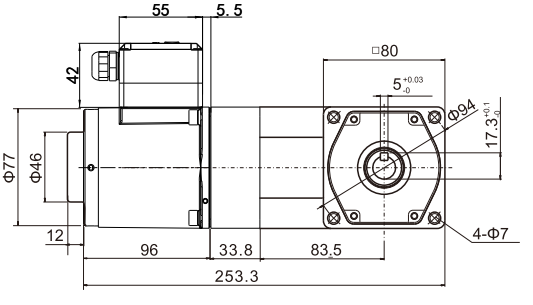


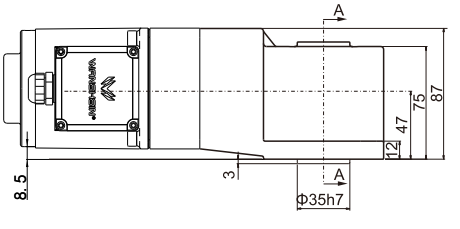


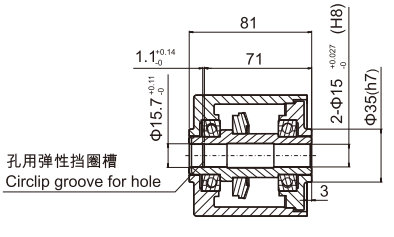

# 外形尺寸(CAD) DIMENSIONS

## 25YB01

圆轴电机 重量:2kg

Round-axis motor,weight:2kg

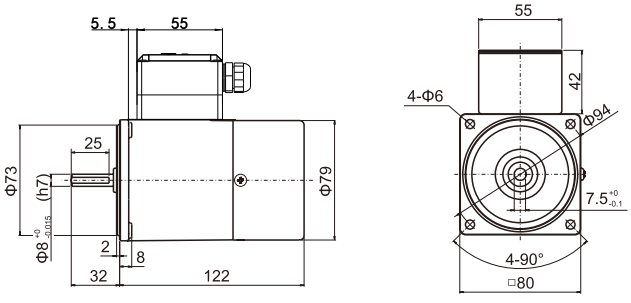


## 25YB02

组合:电机+标准减速机(减速比:1:3~200) 重量:2.7kg

Combination:motor+standard gearbox(reduction ratio:1:3~200), weight:2.7kg

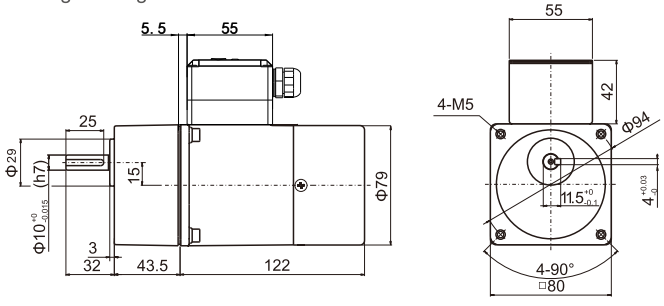


## 25YB03

组合:电机+中间减速箱+标准减速机(减速比:1:200~1800) 重量:3.2kg

Combination:motor+intermediate gearbox+standard gearbox(reduction ratio:1:200~1800),weight:3.2kg

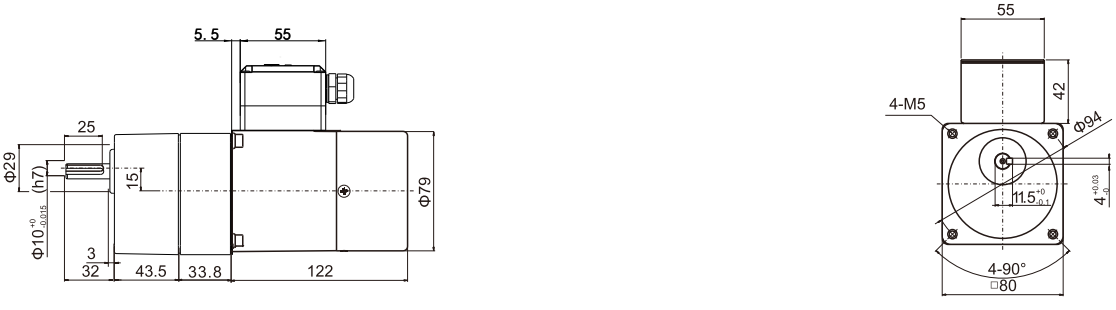


## 25YB04

组合:电机+直角中实减速箱(减速比:1:3~200) 重量:3.8kg

Combination:motor+right angle solid gearbox(reduction ratio:1:3~200), weight:3.8kg

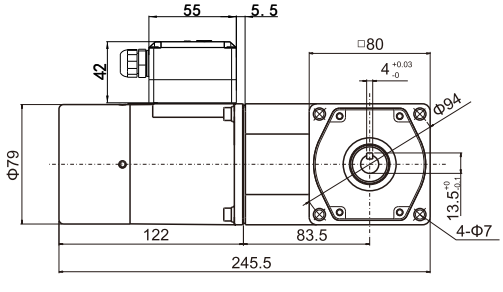


## 25YB05

组合:电机+中间减速箱+直角中实减速箱
(减速比:1:200~1800) 重量:4.3kg

Combination:motor+intermediate gearbox+right angle solid gearbox(reduction ratio:1:200~1800),weight:4.3kg

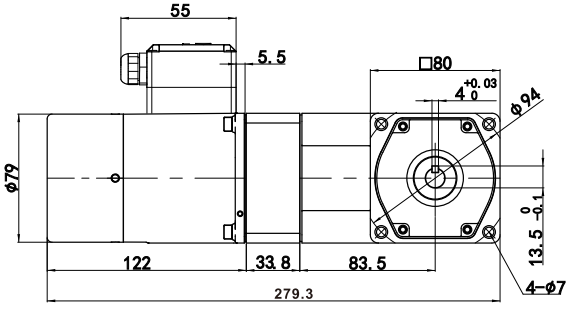

## 外形尺寸(CAD) DIMENSIONS

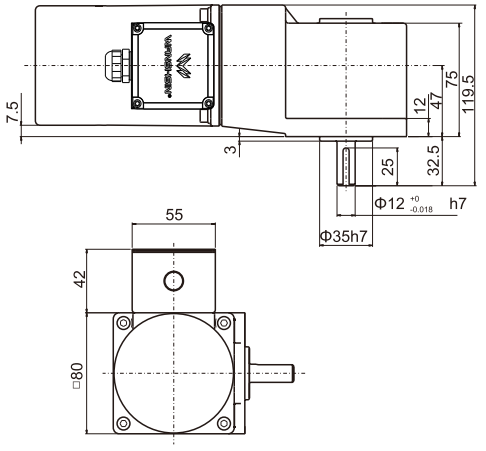


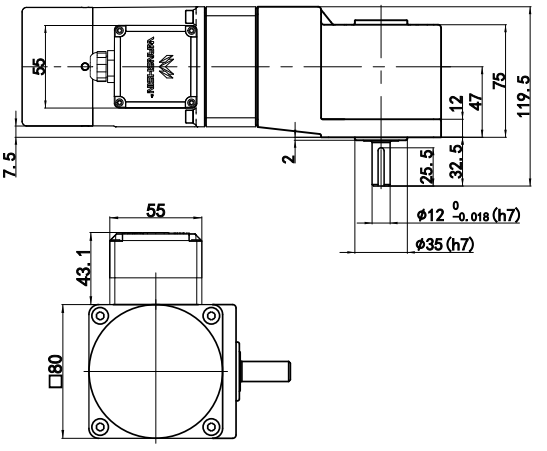


### 25YB06

组合:电机+直角中空减速箱(减速比:1:3~200) 重量:3.7kg

Combination:motor+right angle hollow gearbox(reduction ratio:1:3~200), weight:3.7kg

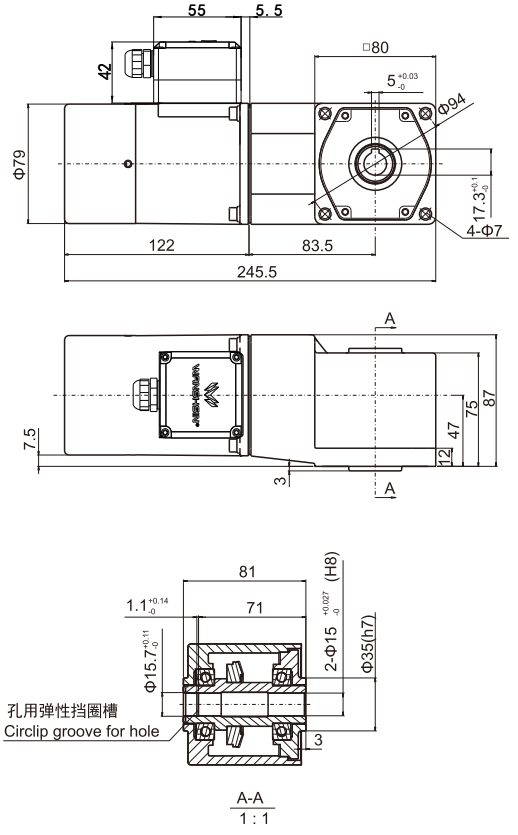


### 25YB07

组合:电机+中间减速箱+直角中空减速箱
(减速比:1:200~1800) 重量:4.2kg

Combination:motor+intermediate gearbox+right angle hollow gearbox (reduction ratio:1:200~1800),weight:4.2kg

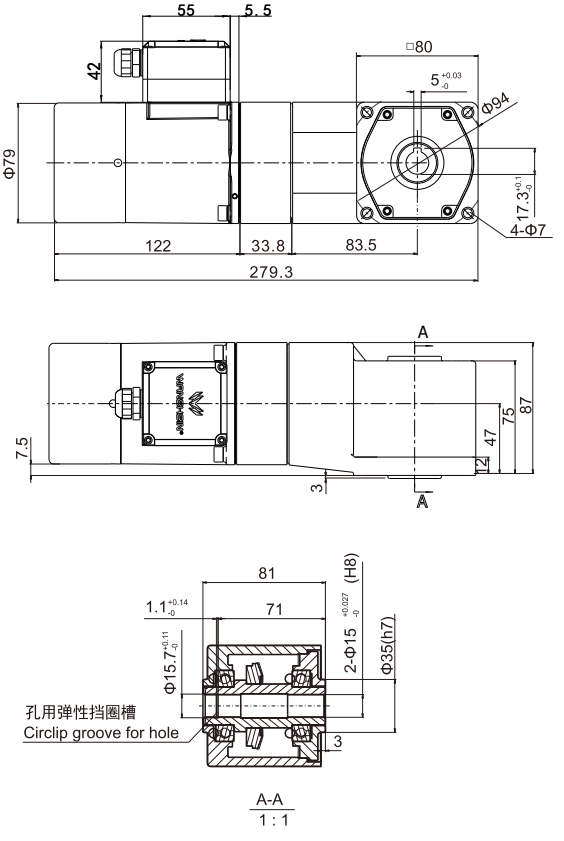

# 40W 60W

□90×90mm

## 各型号电机性能 MOTOR PERFORMANCE

| 型号 MODEL | | 最大输出功率(W) MAXIMUM OUTPUT POWER | 电压V VOLTAGE | 频率Hz FREQUENCY | 电流A CURRENT | 调速范围 r/min SPEED RANGE | 起动转矩 mN·m START TORQUE | 额定转矩(mN·m) RATED TORQUE 1200r/min | 90r/min | 运行电容 RUNNING CAPACITOR |
|---|---|---|---|---|---|---|---|---|---|---|
| 齿轮轴 GEAR SHAFT | 90YS40GV11<br>90YR40GV11<br>90YT40GV11<br>90YF40GV11<br>90YB40GV11 | 40 | Single phase 单相 110 | 50Hz | 0.79 | 90-1300 | 235 | 300 | 65 | 12μf/250V |
| 圆轴 ROUND SHAFT | 90YS40DV11<br>90YR40DV11<br>90YT40DV11<br>90YF40DV11<br>90YB40DV11 | | | 60Hz | 0.71 | 90-1600 | 180 | 260 | 70 | |
| 齿轮轴 GEAR SHAFT | 90YS40GV22<br>90YR40GV22<br>90YT40GV22<br>90YF40GV22<br>90YB40GV22 | 40 | Single phase 单相 220 | 50Hz | 0.40 | 90-1300 | 235 | 320 | 65 | 3μf/450V |
| 圆轴 ROUND SHAFT | 90YS40DV22<br>90YR40DV22<br>90YT40DV22<br>90YF40DV22<br>90YB40DV22 | | | 60Hz | 0.37 | 90-1600 | 180 | 260 | 70 | |
| 齿轮轴 GEAR SHAFT | 90YS40GY22<br>90YB40GY22 | 40 | Three phase 三相 220 | 50Hz | 0.35 | 90-1300 | 403 | 310 | | |
| 圆轴 ROUND SHAFT | 90YS40DY22<br>90YB40DY22 | | | 60Hz | 0.32 | 90-1600 | 338 | 260 | | |
| 齿轮轴 GEAR SHAFT | 90YS40GY38<br>90YB40GY38 | 40 | Three phase 三相 380 | 50Hz | 0.21 | 90-1300 | 403 | 310 | | |
| 圆轴 ROUND SHAFT | 90YS40DY38<br>90YB40DY38 | | | 60Hz | 0.19 | 90-1600 | 338 | 260 | | |

▪虽然调速电机的调速范围为：50Hz…90~1300r/min；60Hz…90~1600r/min。但由于低速时( < 400r/min)，电机转矩下降较多，易发生过载，且电机直连风扇冷却效果差，易发热，因此必须预留足够的功率余量，并且不要经常工作在低速区。因此电机最佳调速范围为：50Hz…400~1300r/min；60Hz…400~1600r/min。

▪在断开电源的同时，电机会瞬间停止关保持负载。

▪Although the speed range of the motor is 50Hz, 90~1300r/min, 60Hz, 90~1600r/min, it easily causes overload and the cooling effect of the motor fan is poor if the speed is too low (<400r/min) and the motor torque decreases too much; therefore, please keep sufficient power margin and avoid operating in low speed section frequently. The optimal speed range of the motor is 50Hz, 400~1300r/min, 60Hz, 400~1600r/min.

▪When the power is cut off, the motor will stop immediately and hold the load.

## 各型号电机性能 MOTOR PERFORMANCE

| 型号 MODEL | | 最大输出功率(W) MAXIMUM OUTPUT POWER | 电压V VOLTAGE | 频率Hz FREQUENCY | 电流A CURRENT | 调速范围 r/min SPEED RANGE | 起动转矩 mN·m START TORQUE | 额定转矩(mN·m) RATED TORQUE 1200r/min | 90r/min | 运行电容 RUNNING CAPACITOR |
|---|---|---|---|---|---|---|---|---|---|---|
| 齿轮轴 GEAR SHAFT | 90YS60GV11<br>90YR60GV11<br>90YT60GV11<br>90YF60GV11<br>90YB60GV11 | 60 | Single phase 单相 110 | 50Hz | 1.26 | 90-1300 | 350 | 490 | 200 | 12μf/250V |
| 圆轴 ROUND SHAFT | 90YS60DV11<br>90YR60DV11<br>90YT60DV11<br>90YF60DV11<br>90YB60DV11 | | | 60Hz | 1.14 | 90-1600 | 280 | 490 | 220 | |
| 齿轮轴 GEAR SHAFT | 90YS60GV22<br>90YR60GV22<br>90YT60GV22<br>90YF60GV22<br>90YB60GV22 | 60 | Single phase 单相 220 | 50Hz | 0.62 | 90-1300 | 350 | 490 | 200 | 4μf/450V |
| 圆轴 ROUND SHAFT | 90YS60DV22<br>90YR60DV22<br>90YT60DV22<br>90YF60DV22<br>90YB60DV22 | | | 60Hz | 0.57 | 90-1600 | 280 | 490 | 220 | |
| 齿轮轴 GEAR SHAFT | 90YS60GY22<br>90YB60GY22 | 60 | Three phase 三相 220 | 50Hz | 0.53 | 90-1300 | 600 | 460 | | |
| 圆轴 ROUND SHAFT | 90YS60DY22<br>90YB60DY22 | | | 60Hz | 0.48 | 90-1600 | 490 | 375 | | |
| 齿轮轴 GEAR SHAFT | 90YS60GY38<br>90YB60GY38 | 60 | Three phase 三相 380 | 50Hz | 0.32 | 90-1300 | 600 | 460 | | |
| 圆轴 ROUND SHAFT | 90YS60DY38<br>90YB60DY38 | | | 60Hz | 0.29 | 90-1600 | 490 | 375 | | |

▪虽然调速电机的调速范围为：50Hz…90~1300r/min；60Hz…90~1600r/min。但由于低速时( < 400r/min)，电机转矩下降较多，易发生过载，且电机直连风扇冷却效果差，易发热，因此必须预留足够的功率余量，并且不要经常工作在低速区。因此电机最佳调速范围为：50Hz…400~1300r/min；60Hz…400~1600r/min。

▪在断开电源的同时，电机会瞬间停止关保持负载。

▪Although the speed range of the motor is 50Hz, 90~1300r/min, 60Hz, 90~1600r/min, it easily causes overload and the cooling effect of the motor fan is poor if the speed is too low (<400r/min) and the motor torque decreases too much; therefore, please keep sufficient power margin and avoid operating in low speed section frequently. The optimal speed range of the motor is 50Hz, 400~1300r/min, 60Hz, 400~1600r/min.

▪When the power is cut off, the motor will stop immediately and hold the load.

# 外形尺寸(CAD) DIMENSIONS

## 40/60YS/YR/YT/YB/YF01

圆轴电机 重量:2.5kg

Round-axis motor,weight:2.5kg

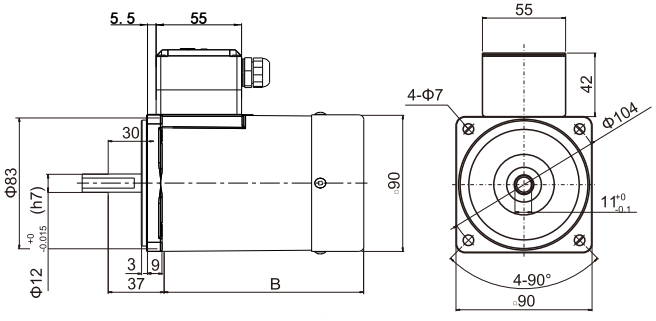


## 40/60YS/YR/YT/YB/YF02

组合:电机+标准减速机(减速比:1:3~200) 重量:3.7kg

Combination:motor+standard gearbox(reduction ratio:1:3~200), weight:3.7kg

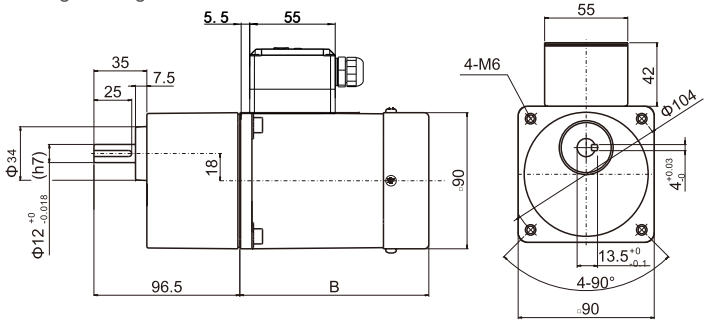


## 40/60YS/YR/YT/YB/YF03

组合:电机+中间减速箱+标准减速机(减速比:1:200~1800) 重量:4.6kg

Combination:motor+intermediate gearbox+standard gearbox(reduction ratio:1:200~1800),weight:4.6kg

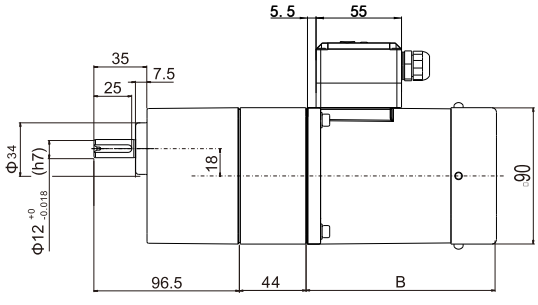


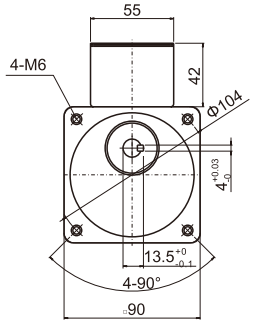


| 序号 No. | 电机类型 Motor type | A | B | C |
|---|---|---|---|---|
| 1 | YS/YR | 276.5 | 125 | 320.5 |
| 2 | YT | 287.5 | 136 | 331.5 |
| 3 | YB | 311.5 | 160 | 355.5 |
| 4 | YF | 323.5 | 172 | 367.5 |

## 40/60YS/YR/YT/YB/YF04

组合:电机+带耳减速机(减速比:1:3~200)
重量:3.7kg

Combination:motor+eared gear(reduction ratio:1:3~200), weight:3.7kg

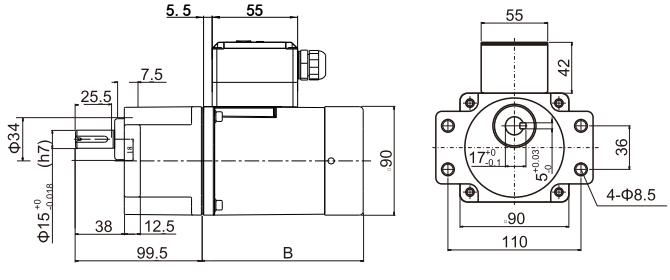


## 40/60YS/YR/YT/YB/YF05

组合:电机+中间减速箱+带耳减速机(减速比:
1:200~1800) 重量:4.6kg

Combination:motor+intermediate gearbox+eared gear(reduction ratio:1:200~1800),weight:4.6kg

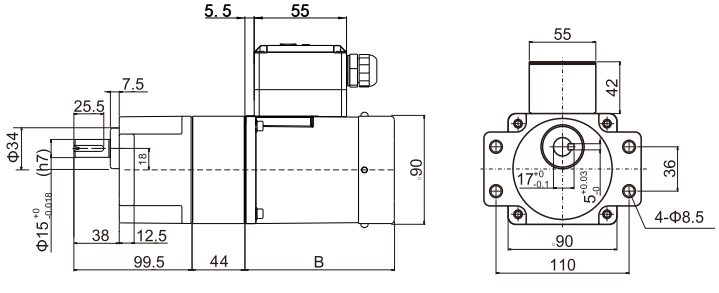

# 外形尺寸 (CAD) DIMENSIONS

## 40/60YS/YR/YT/YB/YF06

组合:电机+直角中实减速箱(减速比:1:3~200)
重量:5.4kg

Combination:motor+right angle solid gearbox(reduction ratio:1:3~200),weight:5.4kg

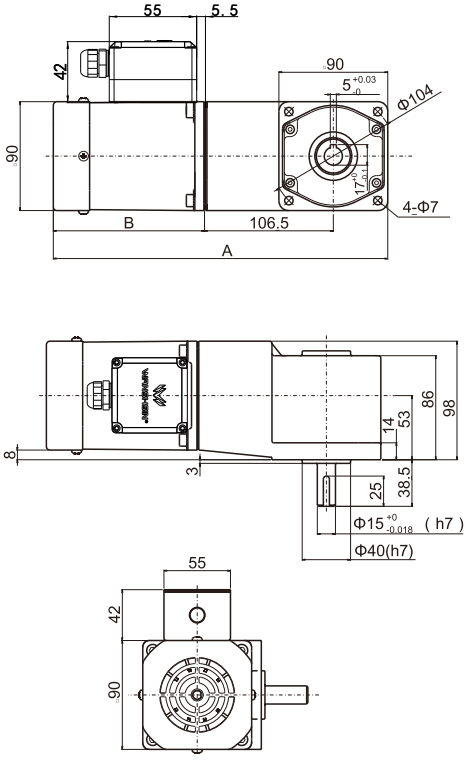


## 40/60YS/YR/YT/YB/YF07

组合:电机+中间减速箱+直角中实减速箱
(减速比:1:200~1800) 重量:6.3kg

Combination:motor+intermediate gearbox+right angle solid gearbox (reduction ratio:1:200~1800),weight:6.3kg

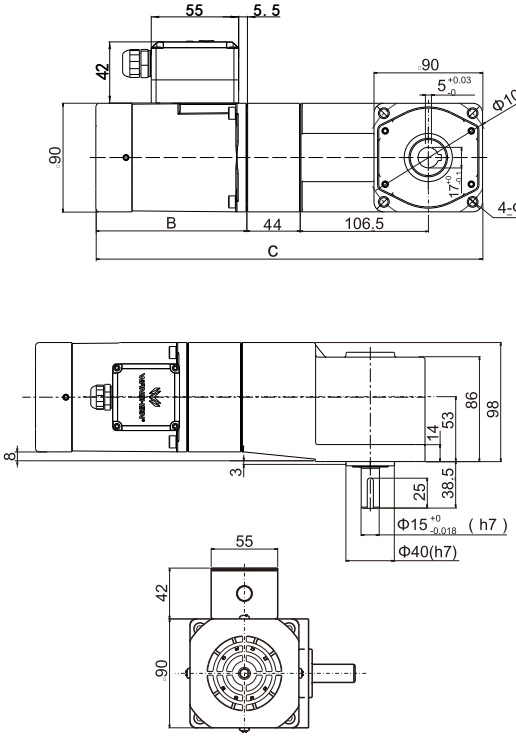


## 40/60YS/YR/YT/YB/YF08

组合:电机+直角中空减速箱(减速比:1:3~200) 重量:5.3kg

Combination:motor+right angle hollow gearbox(reduction ratio:1:3~200), weight:5.3kg

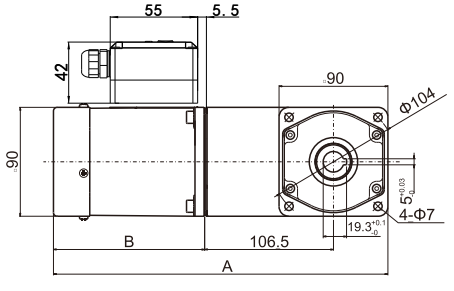


## 40/60YS/YR/YT/YB/YF09

组合:电机+中间减速箱+直角中空减速箱
(减速比:1:200~1800) 重量:6.2kg

Combination:motor+intermediate gearbox+right angle hollow gearbox (reduction ratio:1:200~1800),weight:6.2kg

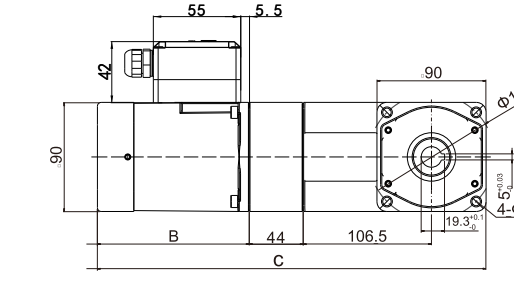

## 外形尺寸(CAD)DIMENSIONS

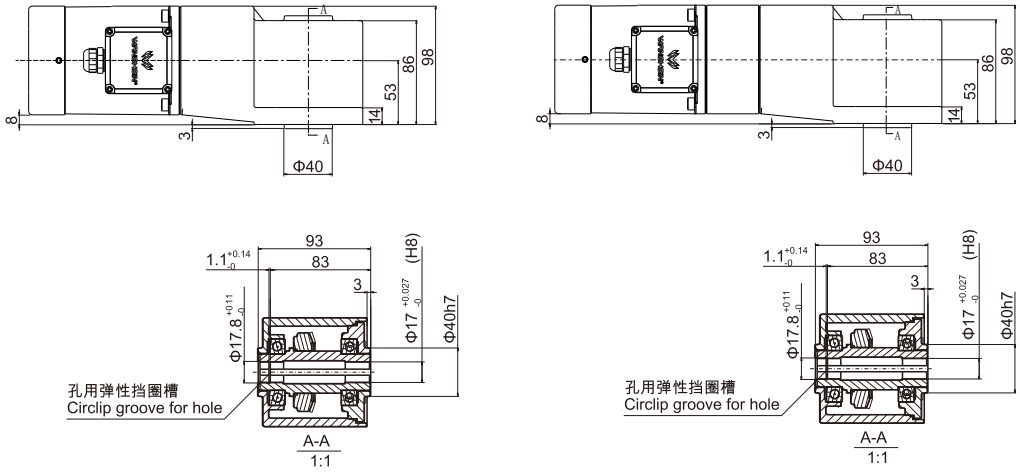


90W
120W

□90×90mm

## 各型号电机性能 MOTOR PERFORMANCE

| 型号 MODEL | | 最大输出功率(W) MAXIMUM OUTPUT POWER | 电压V VOLTAGE | 频率Hz FREQUENCY | 电流A CURRENT | 调速范围 r/min SPEED RANGE | 起动转矩 mN·m START TORQUE | 额定转矩(mN·m) RATED TORQUE 1200r/min | 90r/min | 运行电容 RUNNING CAPACITOR |
|---|---|---|---|---|---|---|---|---|---|---|
| 齿轮轴 GEAR SHAFT | 90YS90GV11<br>90YR90GV11<br>90YT90GV11<br>90YB90GV11<br>90YF90GV11 | 90 | Single phase 单相 110 | 50Hz | 1.70 | 90-1300 | 525 | 710 | 200 | 20μf/250V |
| 圆轴 ROUND SHAFT | 90YS90DV11<br>90YR90DV11<br>90YT90DV11<br>90YB90DV11<br>90YF90DV11 | | | 60Hz | 1.50 | 90-1600 | 420 | 710 | 200 | |
| 齿轮轴 GEAR SHAFT | 90YS90GV22<br>90YR90GV22<br>90YT90GV22<br>90YB90GV22<br>90YF90GV22 | 90 | Single phase 单相 220 | 50Hz | 0.95 | 90-1300 | 525 | 710 | 200 | 5μf/450V |
| 圆轴 ROUND SHAFT | 90YS90DV22<br>90YR90DV22<br>90YT90DV22<br>90YB90DV22<br>90YF90DV22 | | | 60Hz | 0.86 | 90-1600 | 420 | 710 | 200 | |
| 齿轮轴 GEAR SHAFT | 90YS90GY22<br>90YB90GY22 | 90 | Three phase 三相 220 | 50Hz | 0.69 | 90-1300 | 910 | 700 | | |
| 圆轴 ROUND SHAFT | 90YS90DY22<br>90YB90DY22 | | | 60Hz | 0.63 | 90-1600 | 730 | 560 | | |
| 齿轮轴 GEAR SHAFT | 90YS90GY38<br>90YB90GY38 | 90 | Three phase 三相 380 | 50Hz | 0.41 | 90-1300 | 910 | 700 | | |
| 圆轴 ROUND SHAFT | 90YS90DY38<br>90YB90DY38 | | | 60Hz | 0.38 | 90-1600 | 730 | 560 | | |

▪虽然调速电机的调速范围为：50Hz…90~1300r/min；60Hz…90~1600r/min。但由于低速时( < 400r/min)，电机转矩下降较多，易发生过载，且电机直连风扇冷却效果差，易发热，因此必须预留足够的功率余量，并且不要经常工作在低速区。因此电机最佳调速范围为：50Hz…400~1300r/min；60Hz…400~1600r/min。

▪在断开电源的同时，电机会瞬间停止关保持负载。

▪Although the speed range of the motor is 50Hz, 90~1300r/min, 60Hz, 90~1600r/min, it easily causes overload and the cooling effect of the motor fan is poor if the speed is too low (<400r/min) and the motor torque decreases too much; therefore, please keep sufficient power margin and avoid operating in low speed section frequently. The optimal speed range of the motor is 50Hz, 400~1300r/min, 60Hz, 400~1600r/min.

▪When the power is cut off, the motor will stop immediately and hold the load.

## 各型号电机性能 MOTOR PERFORMANCE

| 型号 MODEL | | 最大输出功率(W) MAXIMUM OUTPUT POWER | 电压V VOLTAGE | 频率Hz FREQUENCY | 电流A CURRENT | 调速范围 r/min SPEED RANGE | 起动转矩 mN·m START TORQUE | 额定转矩(mN·m) RATED TORQUE 1200r/min | 额定转矩(mN·m) RATED TORQUE 90r/min | 运行电容 RUNNING CAPACITOR |
|---|---|---|---|---|---|---|---|---|---|---|
| 齿轮轴 GEAR SHAFT | 90YS120GV11<br>90YR120GV11<br>90YT120GV11<br>90YB120GV11<br>90YF120GV11 | 120 | Single phase 单相 110 | 50Hz | 2.04 | 90-1300 | 720 | 840 | 300 | 24μf/250V |
| 圆轴 ROUND SHAFT | 90YS120DV11<br>90YR120DV11<br>90YT120DV11<br>90YB120DV11<br>90YF120DV11 | | | 60Hz | 1.84 | 90-1600 | 600 | 840 | 300 | |
| 齿轮轴 GEAR SHAFT | 90YS120GV22<br>90YR120GV22<br>90YT120GV22<br>90YB120GV22<br>90YF120GV22 | 120 | Single phase 单相 220 | 50Hz | 1.02 | 90-1300 | 720 | 840 | 300 | 6μf/450V |
| 圆轴 ROUND SHAFT | 90YS120DV22<br>90YR120DV22<br>90YT120DV22<br>90YB120DV22<br>90YF120DV22 | | | 60Hz | 0.92 | 90-1600 | 600 | 840 | 300 | |
| 齿轮轴 GEAR SHAFT | 90YS120GY22<br>90YB120GY22 | 120 | Three phase 三相 220 | 50Hz | 0.89 | 90-1300 | 1195 | 924 | | |
| 圆轴 ROUND SHAFT | 90YS120DY22<br>90YB120DY22 | | | 60Hz | 0.81 | 90-1600 | 1014 | 750 | | |
| 齿轮轴 GEAR SHAFT | 90YS120GY38<br>90YB120GY38 | 120 | Three phase 三相 380 | 50Hz | 0.51 | 90-1300 | 1195 | 924 | | |
| 圆轴 ROUND SHAFT | 90YS120GY38<br>90YB120GY38 | | | 60Hz | 0.45 | 90-1600 | 1014 | 750 | | |

- 虽然调速电机的调速范围为：50Hz…90~1300r/min；60Hz…90~1600r/min。但由于低速时( < 400r/min)，电机转矩下降较多，易发生过载，且电机直连风扇冷却效果差，易发热，因此必须预留足够的功率余量，并且不要经常工作在低速区。因此电机最佳调速范围为：50Hz…400~1300r/min；60Hz…400~1600r/min。
- 在断开电源的同时，电机会瞬间停止关保持负载。

- Although the speed range of the motor is 50Hz, 90~1300r/min, 60Hz, 90~1600r/min, it easily causes overload and the cooling effect of the motor fan is poor if the speed is too low (<400r/min) and the motor torque decreases too much; therefore, please keep sufficient power margin and avoid operating in low speed section frequently. The optimal speed range of the motor is 50Hz, 400~1300r/min, 60Hz, 400~1600r/min.
- When the power is cut off, the motor will stop immediately and hold the load.

## 减速箱减速比性能对照表 REDUCTION RATIO PERFORMANCE CHART

| 减速比 REDUCTION RATIO | | | 3 | 3.6 | 5 | 6 | 7.5 | 10 | 12.5 | 15 | 18 | 20 | 25 | 30 |
|---|---|---|---|---|---|---|---|---|---|---|---|---|---|---|
| 90W | 50Hz | 最高转速r/min Max output speed | 433 | 361 | 260 | 217 | 173 | 130 | 104 | 87 | 72 | 65 | 52 | 43 |
| | | 额定转矩N·m Rated torque | 1.79 | 2.14 | 2.98 | 3.57 | 4.46 | 5.29 | 6.61 | 7.93 | 9.52 | 10.58 | 12.07 | 14.48 |
| | 60Hz | 最高转速r/min Max output speed | 533 | 444 | 320 | 267 | 213 | 160 | 128 | 107 | 89 | 80 | 64 | 53 |
| | | 额定转矩N·m Rated torque | 1.49 | 1.79 | 2.48 | 2.98 | 3.72 | 4.41 | 5.51 | 6.61 | 7.93 | 8.82 | 10.06 | 12.07 |
| 120W | 50Hz | 最高转速r/min Max output speed | 433 | 361 | 260 | 217 | 173 | 130 | 104 | 87 | 72 | 65 | 52 | 43 |
| | | 额定转矩N·m Rated torque | 2.25 | 2.70 | 3.75 | 4.50 | 5.62 | 6.88 | 8.60 | 10.31 | 12.38 | 13.75 | 15.43 | 18.51 |
| | 60Hz | 最高转速r/min Max output speed | 533 | 444 | 320 | 267 | 213 | 160 | 128 | 107 | 89 | 80 | 64 | 53 |
| | | 额定转矩N·m Rated torque | 1.87 | 2.25 | 3.12 | 3.75 | 4.68 | 5.73 | 7.16 | 8.60 | 10.31 | 11.46 | 12.86 | 15.43 |
| 减速比 REDUCTION RATIO | | | 36 | 40 | 50 | 60 | 75 | 90 | 100 | 120 | 150 | 180 | 200 | |
| 90W | 50Hz | 最高转速r/min Max output speed | 36 | 33 | 26 | 22 | 17 | 14 | 13 | 11 | 9 | 7 | 7 | |
| | | 额定转矩N·m Rated torque | 17.38 | 19.31 | 20 | 20 | 20 | 20 | 20 | 20 | 20 | 20 | 20 | |
| | 60Hz | 最高转速r/min Max output speed | 44 | 40 | 32 | 27 | 21 | 18 | 16 | 13 | 11 | 9 | 8 | |
| | | 额定转矩N·m Rated torque | 14.48 | 16.09 | 20 | 20 | 20 | 20 | 20 | 20 | 20 | 20 | 20 | |
| 120W | 50Hz | 最高转速r/min Max output speed | 36 | 33 | 26 | 22 | 17 | 14 | 13 | 11 | 9 | 7 | 7 | |
| | | 额定转矩N·m Rated torque | 20 | 20 | 20 | 20 | 20 | 20 | 20 | 20 | 20 | 20 | 20 | |
| | 60Hz | 最高转速r/min Max output speed | 44 | 40 | 32 | 27 | 21 | 18 | 16 | 13 | 11 | 9 | 8 | |
| | | 额定转矩N·m Rated torque | 18.51 | 20 | 20 | 20 | 20 | 20 | 20 | 20 | 20 | 20 | 20 | |

▪表中转速是以电机的平均转速(50Hz:1300r/min、60Hz:1600r/min)为基数除以减速比而算出的数值。
▪实际转速随负载大小而少量变化，变化范围为±8%左右。
▪The speed in the table is the value of average motor speed (50Hz: 1300r/min, 60Hz: 1600r/min) divided by the reduction ratio.
▪The actual speed changes according to the load (±8%).

标准减速箱
STANDARD GEARBOX
90GF □H

带耳减速箱
EARED GEARBOX
90GF □HE

直角中空减速箱
RIGHT ANGLE HOLLOW GEARBOX
L90GF □RC

中间减速箱
INTERMEDIATE GEARBOX
90GM10

直角中实减速箱
RIGHT ANGLE SOLID GEARBOX
L90GF □RT

减速箱型号中的□为减速比的数值
速比：1:3~200;中间减速箱：( 1 : 10 )
□ in gearbox model indicates the reduction ratio (1:3~200);MIDDLE GEARBOX:( 1 : 10 )

# 外形尺寸 (CAD) DIMENSIONS

## 90/120YS/YR/YT/YB/YF01

圆轴电箱 重量:3kg

Round-axis motor,weight:3kg

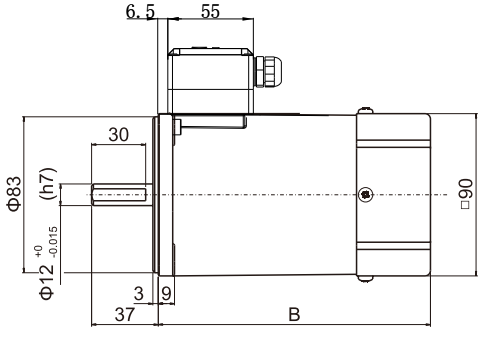


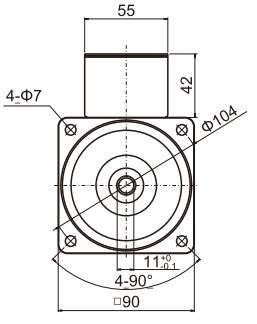


| 序号 No. | 电机类型 Motor type | B |
|---|---|---|
| 1 | YS/YR | 140 |
| 2 | YT | 151 |
| 3 | YB | 175 |
| 4 | YF | 187 |

## 90/120YS/YR/YT/YB/YF02

组合:电机+标准减速机(减速比:1:3~200) 重量:4.2kg

Combination:motor+standard gearbox(reduction ratio:1:3~200),weight:4.2kg

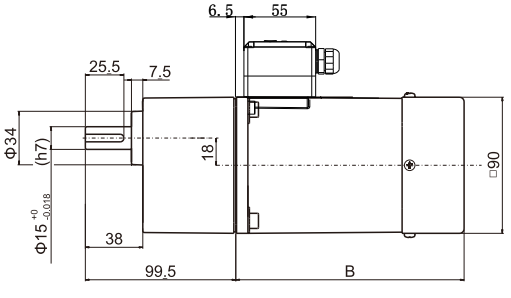


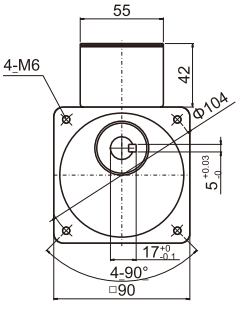


| 序号 No. | 电机类型 Motor type | B |
|---|---|---|
| 1 | YS/YR | 140 |
| 2 | YT | 151 |
| 3 | YB | 175 |
| 4 | YF | 187 |

## 90/120YS/YR/YT/YB/YF03

组合:电机+中间减速箱+标准减速机(减速比:1:200~1800) 重量:5.1kg

Combination:motor+intermediate gearbox+standard gearbox(reduction ratio:1:200~1800),weight:5.1kg

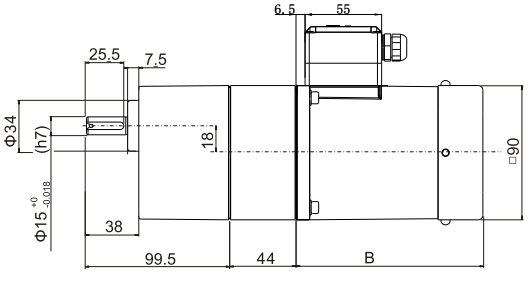


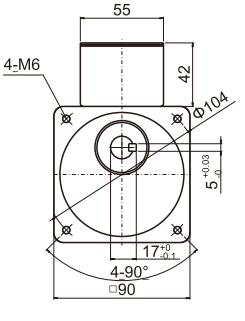


| 序号 No. | 电机类型 Motor type | B |
|---|---|---|
| 1 | YS/YR | 140 |
| 2 | YT | 151 |
| 3 | YB | 175 |
| 4 | YF | 187 |

# 外形尺寸 (CAD) DIMENSIONS

## 90/120YS/YR/YT/YB/YF04

组合:电机+带耳减速箱(减速比:1:3~200) 重量:4.2kg

Combination:motor+eared gear (reduction ratio:1:3~200),weight:4.2kg

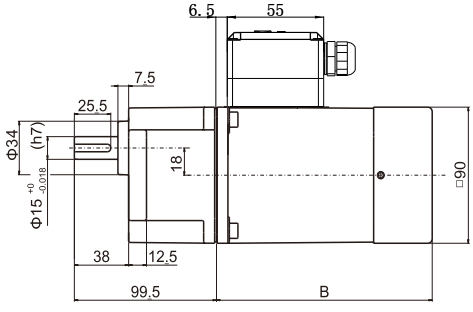


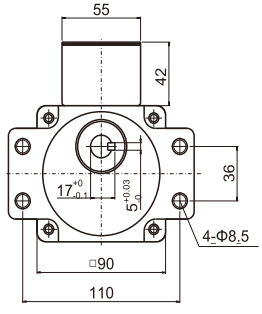


| 序号 No. | 电机类型 Motor type | B |
|---|---|---|
| 1 | YS/YR | 140 |
| 2 | YT | 151 |
| 3 | YB | 175 |
| 4 | YF | 187 |

## 90/120YS/YR/YT/YB/YF05

组合:电机+中间减速箱+带耳减速箱(减速比:1:200~1800) 重量:5.1kg

Combination:motor+intermediate gearbox+eared gear (reduction ratio:1:200~1800),weight:5.1kg

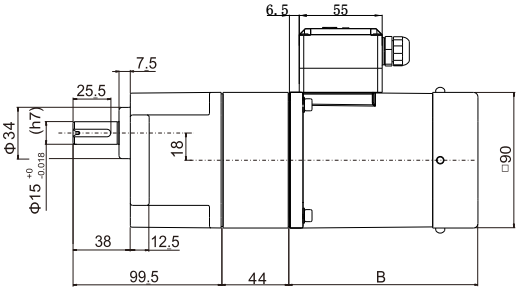


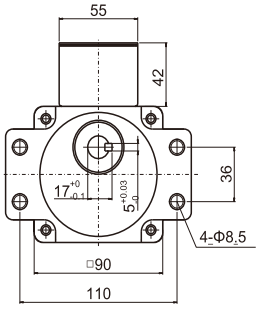


| 序号 No. | 电机类型 Motor type | B |
|---|---|---|
| 1 | YS/YR | 140 |
| 2 | YT | 151 |
| 3 | YB | 175 |
| 4 | YF | 187 |

## 90/120YS/YR/YT/YB/YF06

组合:电机+直角中实减速箱(减速比:1:3~200)
重量:6.2kg

Combination:motor+right angle solid gearbox(reduction ratio: 1:3~200),weight:6.2kg

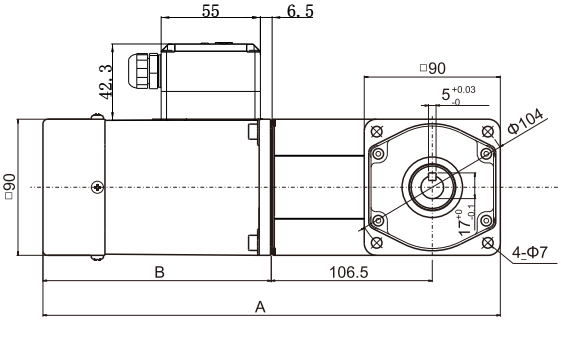


## 90/120YS/YR/YT/YB/YF07

组合:电机+中间减速箱+直角中实减速箱
(减速比:1:200~1800) 重量:7.1kg

Combination:motor+intermediate gearbox+right angle solid gearbox(reduction ratio:1:200~1800),weight:7.1kg

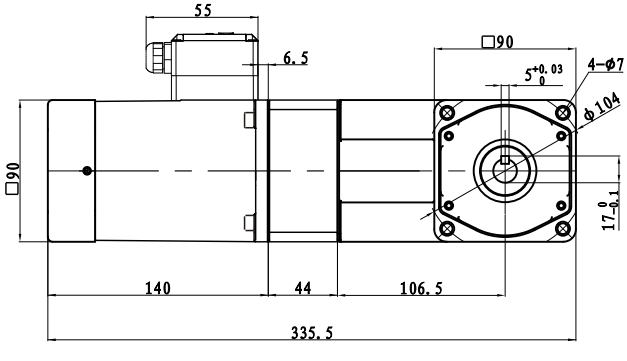

## 外形尺寸 (CAD) DIMENSIONS

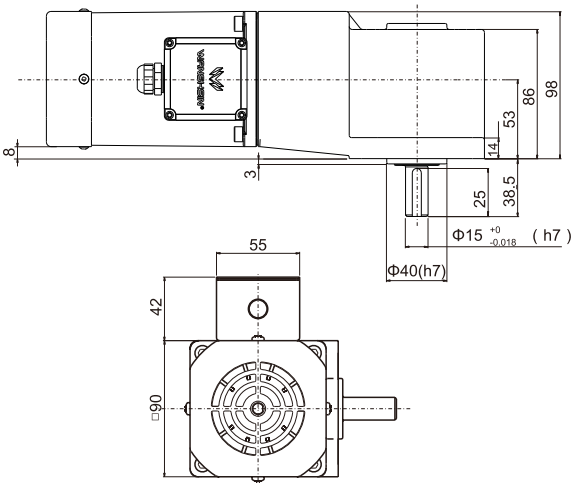


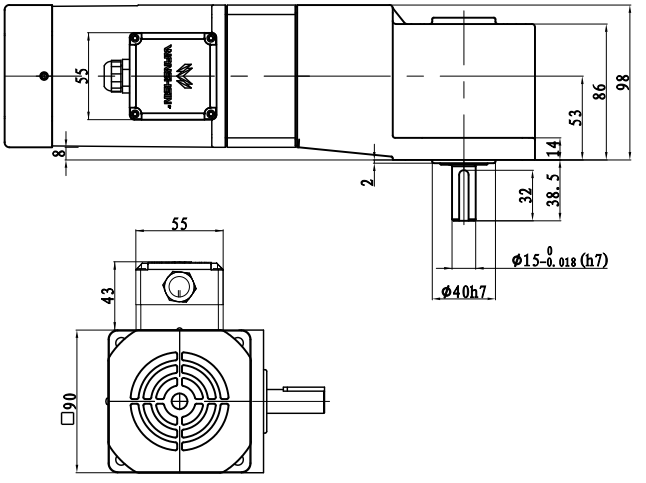


### 90/120YS/YR/YT/YB/YF08

组合:电机+直角中空减速箱(减速比:1:3~200) 重量:6kg

Combination:motor+right angle hollow gearbox(reduction ratio:1:3~200), weight:6kg

### 90/120YS/YR/YT/YB/YF09

组合:电机+中间减速箱+直角中空减速箱
(减速比:1:200~1800) 重量:6.9kg

Combination:motor+intermediate gearbox+right angle hollow gearbox (reduction ratio:1:200~1800),weight:6.9kg

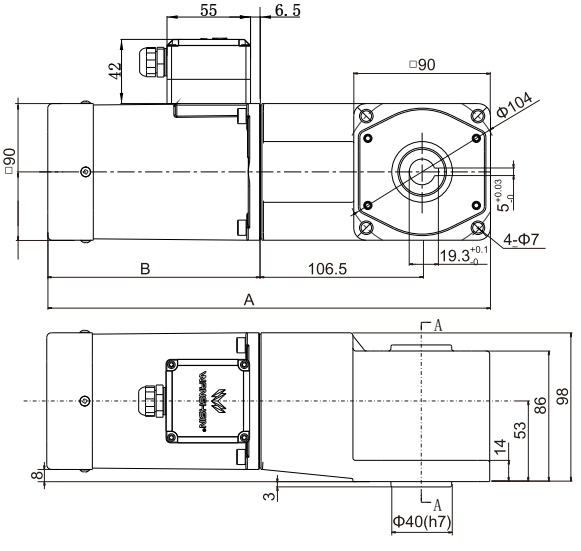


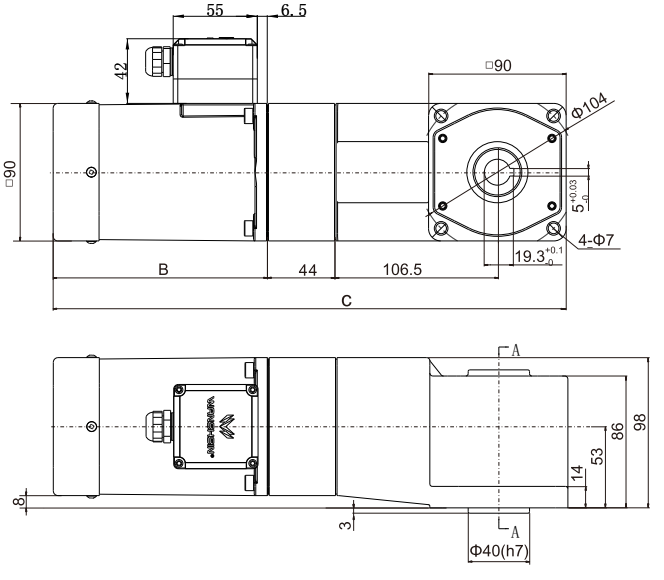


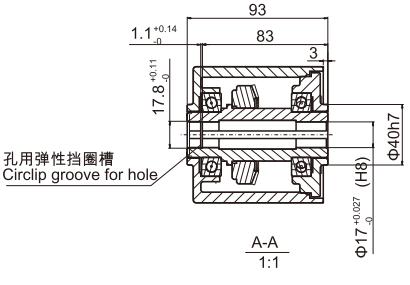


| 序号 No. | 电机类型 Motor type | A | B | C |
|---|---|---|---|---|
| 1 | YS/YR | 291.5 | 140 | 335.5 |
| 2 | YT | 302.5 | 151 | 346.5 |
| 3 | YB | 326.5 | 175 | 370.5 |
| 4 | YF | 338.5 | 187 | 382.5 |

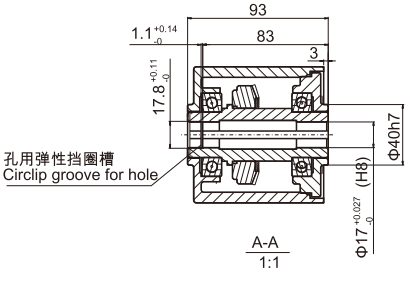

# 140W 200W

□100×100mm

## 各型号电机性能 MOTOR PERFORMANCE

| 型号 MODEL | | 最大输出功率(W) MAXIMUM OUTPUT POWER | 电压V VOLTAGE | 频率Hz FREQUENCY | 电流A CURRENT | 调速范围 r/min SPEED RANGE | 起动转矩 mN·m START TORQUE | 额定转矩(mN·m) RATED TORQUE 1200r/min | 90r/min | 运行电容 RUNNING CAPACITOR |
|---|---|---|---|---|---|---|---|---|---|---|
| 齿轮轴 GEAR SHAFT | 100YS140GV11<br>100YT140GV11<br>100YB140GV11<br>100YF140GV11 | 140 | Single phase 单相 110 | 50Hz | 2.26 | 90-1300 | 840 | 1050 | 350 | 32μf/250V |
| 圆轴 ROUND SHAFT | 100YS140DV11<br>100YT140DV11<br>100YB140DV11<br>100YF140DV11 | | | 60Hz | 2.10 | 90-1600 | 680 | 1050 | 350 | |
| 齿轮轴 GEAR SHAFT | 100YS140GV22<br>100YT140GV22<br>100YB140GV22<br>100YF140GV22 | 140 | Single phase 单相 220 | 50Hz | 1.13 | 90-1300 | 840 | 1050 | 350 | 8μf/450V |
| 圆轴 ROUND SHAFT | 100YS140DV22<br>100YT140DV22<br>100YB140DV22<br>100YF140DV22 | | | 60Hz | 1.05 | 90-1600 | 680 | 1050 | 350 | |
| 齿轮轴 GEAR SHAFT | 100YS140GY22<br>100YB140GY22 | 140 | Three phase 三相 220 | 50Hz | 0.95 | 90-1300 | 1393 | 1078 | | |
| 圆轴 ROUND SHAFT | 100YS140DY22<br>100YB140DY22 | | | 60Hz | 0.88 | 90-1600 | 1183 | 875 | | |
| 齿轮轴 GEAR SHAFT | 100YS140GY38<br>100YB140GY38 | 140 | Three phase 三相 380 | 50Hz | 0.55 | 90-1300 | 1393 | 1078 | | |
| 圆轴 ROUND SHAFT | 100YS140DY38<br>100YB140DY38 | | | 60Hz | 0.48 | 90-1600 | 1183 | 875 | | |
| 齿轮轴 GEAR SHAFT | 100YS200GV11<br>100YT200GV11<br>100YB200GV11<br>100YF200GV11 | 200 | Single phase 单相 110 | 50Hz | 3.38 | 90-1300 | 1150 | 1650 | | 40μf/250V |
| 圆轴 ROUND SHAFT | 100YS200DV11<br>100YT200DV11<br>100YB200DV11<br>100YF200DV11 | | | 60Hz | 3.08 | 90-1600 | 930 | 1330 | | |
| 齿轮轴 GEAR SHAFT | 100YS200GV22<br>100YT200GV22<br>100YB200GV22<br>100YF200GV22 | 200 | Single phase 单相 220 | 50Hz | 1.69 | 90-1300 | 1150 | 1650 | | 10μf/450V |
| 圆轴 ROUND SHAFT | 100YS200DV22<br>100YT200DV22<br>100YB200DV22<br>100YF200DV22 | | | 60Hz | 1.54 | 90-1600 | 930 | 1330 | | |
| 齿轮轴 GEAR SHAFT | 100YS200GY22<br>100YB200GY22 | 200 | Three phase 三相 220 | 50Hz | 1.82 | 90-1300 | 1990 | 1540 | | |
| 圆轴 ROUND SHAFT | 100YS200DY22<br>100YB200DY22 | | | 60Hz | 1.64 | 90-1600 | 1690 | 1250 | | |
| 齿轮轴 GEAR SHAFT | 100YS200GY38<br>100YB200GY38 | 200 | Three phase 三相 380 | 50Hz | 1.05 | 90-1300 | 1990 | 1540 | | |
| 圆轴 ROUND SHAFT | 100YS200DY38<br>100YB200DY38 | | | 60Hz | 0.95 | 90-1600 | 1690 | 1250 | | |

- 虽然调速电机的调速范围为：50Hz…90~1300r/min；60Hz…90~1600r/min。但由于低速时( < 400r/min)，电机转矩下降较多，易发生过载，且电机直连风扇冷却效果差，易发热，因此必须预留足够的功率余量，并且不要经常工作在低速区。因此电机最佳调速范围为：50Hz…400~1300r/min；60Hz…400~1600r/min。
- 在断开电源的同时，电机会瞬间停止关保持负载。
- Although the speed range of the motor is 50Hz, 90~1300r/min, 60Hz, 90~1600r/min, it easily causes overload and the cooling effect of the motor fan is poor if the speed is too low (<400r/min) and the motor torque decreases too much; therefore, please keep sufficient power margin and avoid operating in low speed section frequently. The optimal speed range of the motor is 50Hz, 400~1300r/min, 60Hz, 400~1600r/min.
- When the power is cut off, the motor will stop immediately and hold the load.

## 减速箱减速比性能对照表 REDUCTION RATIO PERFORMANCE CHART

| 减速比 REDUCTION RATIO | | | 3 | 3.6 | 5 | 6 | 7.5 | 10 | 12.5 | 15 | 18 | 20 | 25 | 30 |
|---|---|---|---|---|---|---|---|---|---|---|---|---|---|---|
| 140W | 50Hz | 最高转速r/min Max output speed | 433 | 361 | 260 | 217 | 173 | 130 | 104 | 87 | 72 | 65 | 52 | 43 |
| | | 额定转矩N·m Rated torque | 2.62 | 3.15 | 4.37 | 5.25 | 6.56 | 7.51 | 9.38 | 11.26 | 13.51 | 15.02 | 18.77 | 21.91 |
| | 60Hz | 最高转速r/min Max output speed | 533 | 444 | 320 | 267 | 213 | 160 | 128 | 107 | 89 | 80 | 64 | 53 |
| | | 额定转矩N·m Rated torque | 2.19 | 2.62 | 3.64 | 4.37 | 5.46 | 6.26 | 7.82 | 9.38 | 11.26 | 12.51 | 15.64 | 18.26 |
| 200W | 50Hz | 最高转速r/min Max output speed | 433 | 361 | 260 | 217 | 173 | 130 | 104 | 87 | 72 | 65 | 52 | 43 |
| | | 额定转矩N·m Rated torque | 3.44 | 4.13 | 5.73 | 6.88 | 8.60 | 11.46 | 14.33 | 17.19 | 18.51 | 20.57 | 25.71 | 30.85 |
| | 60Hz | 最高转速r/min Max output speed | 533 | 444 | 320 | 267 | 213 | 160 | 128 | 107 | 89 | 80 | 64 | 53 |
| | | 额定转矩N·m Rated torque | 2.87 | 3.44 | 4.78 | 5.73 | 7.16 | 9.55 | 11.94 | 14.33 | 15.43 | 17.14 | 21.43 | 25.71 |
| 减速比 REDUCTION RATIO | | | 36 | 40 | 50 | 60 | 75 | 90 | 100 | 120 | 150 | 180 | 200 | |
| 140W | 50Hz | 最高转速r/min Max output speed | 36 | 33 | 26 | 22 | 17 | 14 | 13 | 11 | 9 | 7 | 7 | |
| | | 额定转矩N·m Rated torque | 26.29 | 29.21 | 33.94 | 40.73 | 44 | 44 | 44 | 44 | 44 | 44 | 44 | |
| | 60Hz | 最高转速r/min Max output speed | 44 | 40 | 32 | 27 | 21 | 18 | 16 | 13 | 11 | 9 | 8 | |
| | | 额定转矩N·m Rated torque | 21.91 | 24.34 | 28.28 | 33.94 | 40.73 | 44 | 44 | 44 | 44 | 44 | 44 | |
| 200W | 50Hz | 最高转速r/min Max output speed | 36 | 33 | 26 | 22 | 17 | 14 | 13 | 11 | 9 | 7 | 7 | |
| | | 额定转矩N·m Rated torque | 37.02 | 41.14 | 44 | 44 | 44 | 44 | 44 | 44 | 44 | 44 | 44 | |
| | 60Hz | 最高转速r/min Max output speed | 44 | 40 | 32 | 27 | 21 | 18 | 16 | 13 | 11 | 9 | 8 | |
| | | 额定转矩N·m Rated torque | 30.85 | 34.28 | 42.85 | 44 | 44 | 44 | 44 | 44 | 44 | 44 | 44 | |

▪表中转速是以电机的平均转速(50Hz:1300r/min、60Hz:1600r/min)为基数除以减速比而算出的数值。
▪实际转速随负载大小而少量变化，变化范围为±8%左右。
▪The speed in the table is the value of average motor speed (50Hz: 1300r/min, 60Hz: 1600r/min) divided by the reduction ratio.
▪The actual speed changes according to the load (±8%).

标准减速箱
STANDARD GEARBOX
100GF □H

直角中空减速箱
RIGHT ANGLE HOLLOW GEARBOX
L100GF □RC

直角中实减速箱
RIGHT ANGLE SOLID GEARBOX
L100GF □RT

减速箱型号中的□为减速比的数值
速比：1:3~200
□ in gearbox model indicates the reduction ratio (1:3~200)

# 外形尺寸 (CAD) DIMENSIONS

## 140/200YS/YT/YB/YF01

圆轴电箱 重量:4.6kg

Round-axis motor,weight:4.6kg

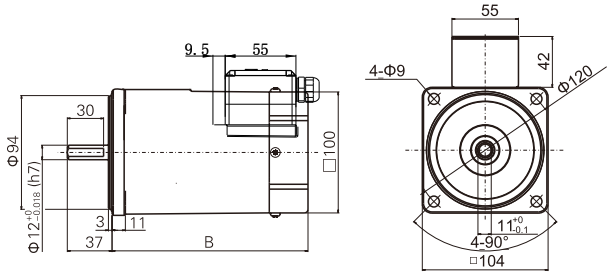


## 140/200YS/YT/YB/YF02

组合:电机+标准减速机(减速比:1:3~200) 重量:6.8kg

Combination:motor+standard gearbox(reduction ratio:1:3~200), weight:6.8kg

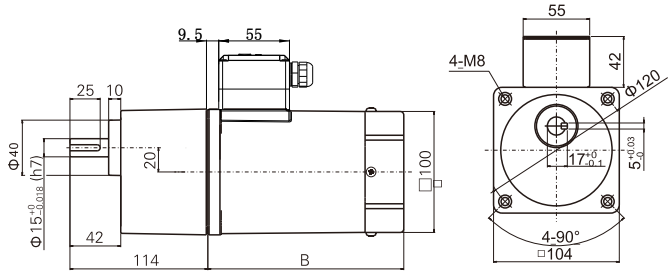


## 140/200YS/YT/YB/YF03

组合:电机+直角中实减速箱
减速比:1:3~200
重量:8.8kg

Combination:motor+right angle solid gearbox
reduction ratio:1:3~200
weight:8.8kg

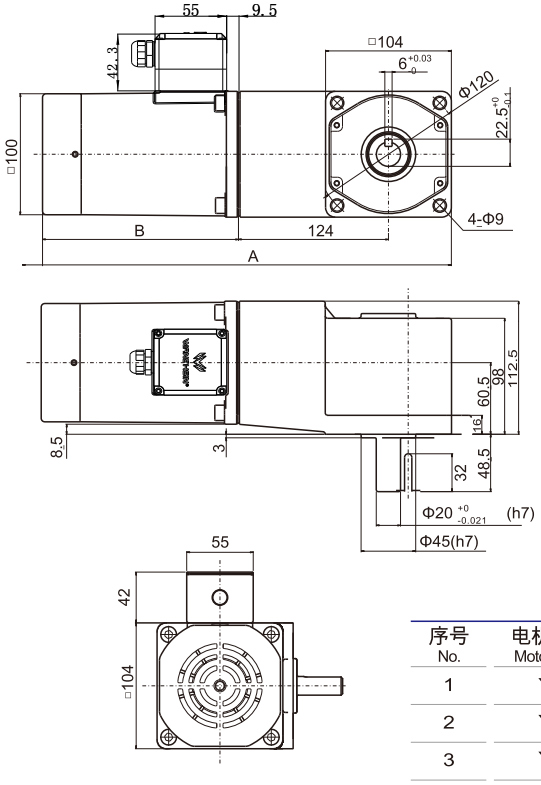


## 140/200YS/YT/YB/YF04

组合:电机+直角中空减速箱
减速比:1:3~200
重量:8.6kg

Combination:motor+right angle hollow gearbox
reduction ratio:1:3~200
weight:8.6kg

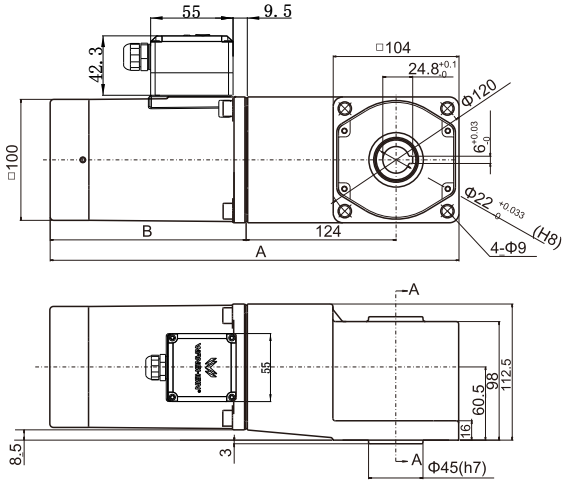


| 序号 No. | 电机类型 Motor type | A | B |
|---|---|---|---|
| 1 | YS | 338 | 162 |
| 2 | YT | 354 | 178 |
| 3 | YB | 368 | 192 |
| 4 | YF | 390 | 214 |

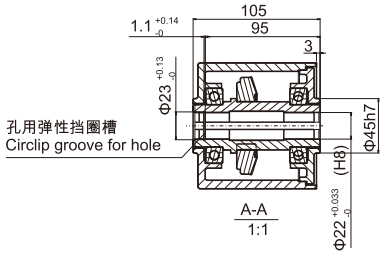

# 数显面板调速器

## Digital panel speed controller

## 数显面板调速器
## Digital panel speed controller

### ■ 特点 FEATURES

- 与调速电机组合实现宽范围的无级变速。
  Achieve continuously variable transmission in a wide range combined with variable speed motor
- 功能丰富，可实现缓慢加速，缓慢减速及电机堵转保护。
  Feature-rich, enabling slow acceleration, slow deceleration and motor stall protection.
- 调速器运行电容直接安装于调速器内部，布线整齐、方便。
  The capacitor for speed governor running is mounted directly inside the governor, featuring neat and convenient wiring.

### ■ 数显面板调速器 Digital panel speed controller

WS-L外形尺寸 WS-L dimensions

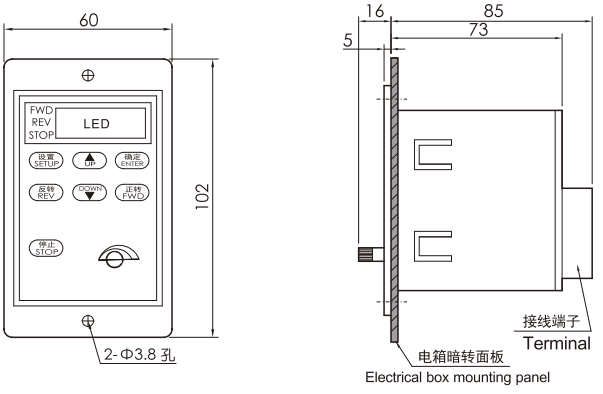


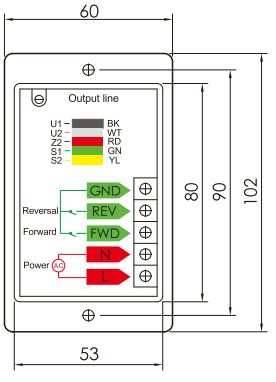


### ■ 型号参数表 MODEL PARAMETERS

| | | |
|---|---|---|
| 型号 MODEL | WS-L | |
| 安装方式 INSTALLATION METHOD | 数显面板式 | Digital panel |
| 调速方法 SPEED REGULATION | 面板按钮及电位器 | Panel Key and potentiometer |
| 电源电压 SUPPLY VOLTAGE | 单相220Vac | Single phase 220Vac |
| 控制功能 FUNCTIONS | 速度控制、缓慢减速、缓慢加速、电磁制动、堵转保护、面板控制正反转、转速显示、面板按键、控制有记忆、倍率设定与外接开关K1及K2可直接接PLC控制。<br>Speed control, slow acceleration, slow deceleration, electronic brake, stall protection, panel control forward and reverse rotation, speed display, Digital display key controlled, it will be remembered, ratio setting and choose external switchK1 AND K2 Can connect with PLC to control directly. | |
| 适用电机功率范围 APPLICABLE MOTOR POWER RANGE | 6W~200W | |
| 运行电容 RUNNING CAPACITOR | 内置Built-in | |
| 电源频率 POWER FREQUENCY | 50/60Hz | |
| 调速范围 SPEED RANGE | 50Hz:90~1300r/min 60Hz:90~1600r/min | |
| 速度变化率 RATE OF SPEED CHANGE | 5% | |
| 电磁制动 ELECTRONIC BRAKING TIME | 0.4秒sec | |
| 使用环境 ENVIRONMENT OF USE | -10℃~+40℃无冻结No freezing,<85%(无结露No condensation) | |

# 面板调速器
## Panel speed controller

## 面板调速器
## Panel speed controller

### 特点 FEATURES

- 与调速电机组合实现宽范围的无级变速。
  Achieve continuously variable transmission in a wide range combined with variable speed motor
- 功能丰富，可实现缓慢加速，缓慢减速及电机堵转保护。
  Feature-rich, enabling slow acceleration, slow deceleration and motor stall protection.
- 调速器运行电容直接安装于调速器内部，布线整齐、方便。
  The capacitor for speed governor running is mounted directly inside the governor, featuring neat and convenient wiring.

### 面板式调速器 Panel speed controller

WS-P外形尺寸 WS-P dimensions

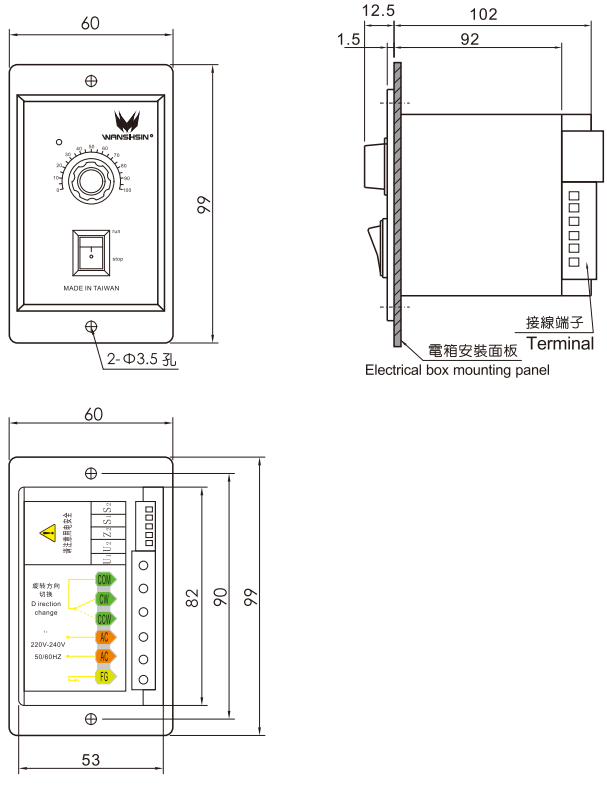


### 型号参数表 MODEL PARAMETERS

| | | |
|---|---|---|
| 型号 MODEL | | WS-P |
| 安装方式 | INSTALLATION METHOD | 面板式 Panel |
| 调速方法 | SPEED REGULATION | 面板电位器 Panel potentiometer |
| 电源电压 | SUPPLY VOLTAGE | 单相220V Single phase 220V |
| 控制功能 | FUNCTIONS | 速度控制、缓慢加速、 缓慢减速 、堵转保护<br>Speed control, slow acceleration, slow deceleration, stall protection |
| 适用电机功率范围 | APPLICABLE MOTOR POWER RANGE | 6W~200W |
| 运行电容 | RUNNING CAPACITOR | 内置Built-in |
| 电源频率 | POWER FREQUENCY | 50/60Hz |
| 调速范围 | SPEED RANGE | 50Hz:90~1300r/min 60Hz:90~1600r/min |
| 速度变化率 | RATE OF SPEED CHANGE | 5% |
| 使用环境 | ENVIRONMENT OF USE | -10℃~+40℃无冻结No freezing,<85%(无结露No condensation) |

# 多功能调速器
## Multi-function speed controller

## 多功能调速器
## Multi-function speed controller

### 特点 FEATURES

- 与调速电机组合实现宽范围的无级变速。
  Achieve continuously variable transmission in a wide range combined with variable speed motor
- 功能丰富，可实现缓慢加速，缓慢减速及电机堵转保护。
  Feature-rich, enabling slow acceleration, slow deceleration and motor stall protection.
- 调速器运行电容直接安装于调速器内部，布线整齐、方便。
  The capacitor for speed governor running is mounted directly inside the governor, featuring neat and convenient wiring.

### 多功能调速器 Multi-function speed controller

WX-K外形尺寸 WX-K dimensions

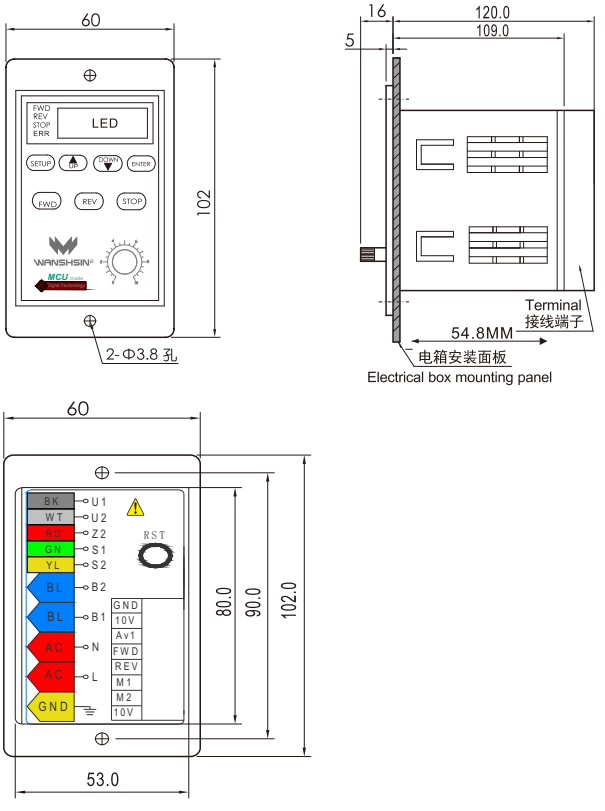


### 型号参数表 MODEL PARAMETERS

| | |
|---|---|
| 型号 MODEL | WX-K |
| 安装方式 INSTALLATION METHOD | 多功能内置式 Multi-Function(Built-in) |
| 调速方法 SPEED REGULATION | 面板按钮及电位器 Panel Key and potentiometer |
| 电源电压 SUPPLY VOLTAGE | 单相220Vac Single phase 220Vac |
| 控制功能 FUNCTIONS | 速度控制、缓慢加速、缓慢减速、堵转保护、控制正反转、转速显示、面板按键控制有记忆、倍率设定、4段速、失电电磁制动停止、RST复位功能、0~10V模拟量控制与外接开关K1及K2可直接接PLC控制。Speed control, slow acceleration, slow deceleration, electronic brake, stall protection, panel control Forward and reverse rotation, speed display, Digital display key controlled, it will be remembered, ratio Setting, 4 stage speed, the electromagnetic brake stop, RST function. 0~10V analog controlled and choose external Switch K1 AND K2 Can connect with PLC to control directly. |
| 适用电机功率范围 APPLICABLE MOTOR POWER RANGE | 6W~200W |
| 运行电容 RUNNING CAPACITOR | 内置Built-in |
| 电源频率 POWER FREQUENCY | 50/60Hz |
| 调速范围 SPEED RANGE | 50Hz:90~1300r/min 60Hz:90~1600r/min |
| 速度变化率 RATE OF SPEED CHANGE | 5% |
| 电磁制动 ELECTRONIC BRAKING TIME | 0.4秒sec |
| 使用环境 ENVIRONMENT OF USE | -10℃~+40℃无冻结No freezing,<85%(无结露No condensation) |

## ■ 面板式调速器的安装INSTALLATION OF PANEL SPEED GOVERNOR

WS-P控制面板开孔尺寸
Hole size of WS-P control panel

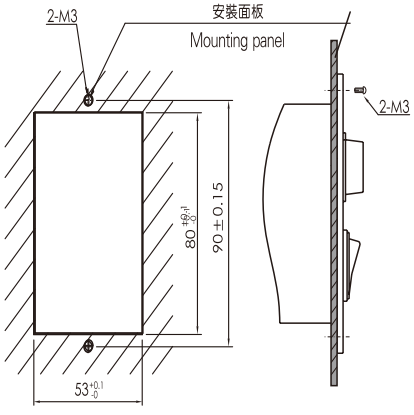


WS-L控制面板开孔尺寸
Hole size of WS-L control panel

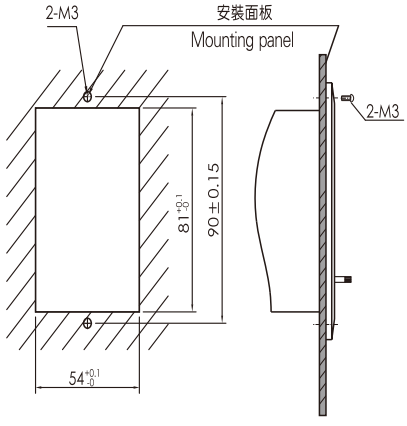


WX-K控制面板开孔尺寸
Hole size of WX-K control panel

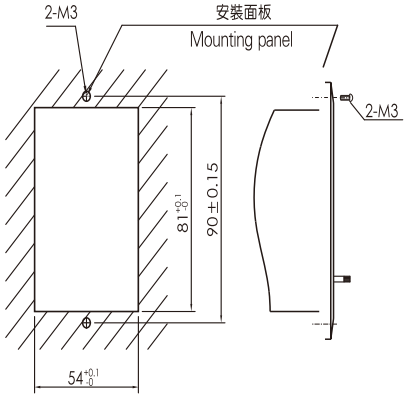


将调速器按图示方向放入开孔，紧定螺钉。
Put the governor into the hole in the direction shown, and tighten the screws.

## ■ 接线方法 WIRING METHOD

单向旋转Unidirectional rotation

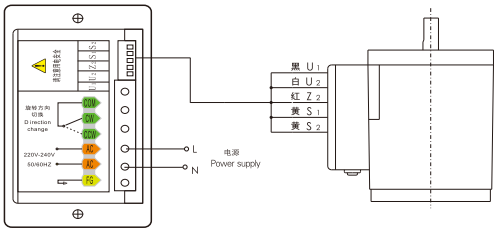


正、反向旋转Forward and reverse rotation

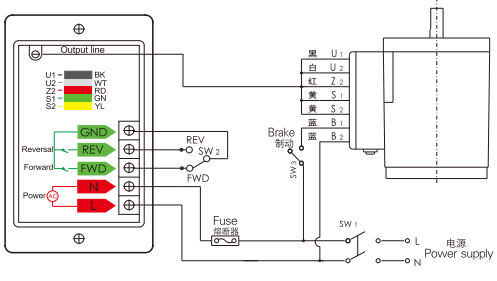


控制接线图Drawing the speed controller

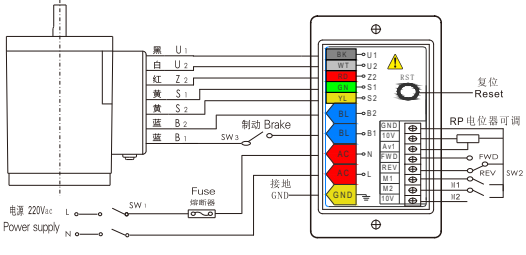


## ■ 旋转方向 DIRECTION OF ROTATION

调速器出厂时，旋转方向选择软线连接于L与FWD端，电机顺时针旋转，若需使电机逆时针旋转，仅需将软线连接于REV端。若需正、反向旋转，则在FWD、REV连接旋转方向选择开关SW2。

When the governor is delivered, the cord of rotation direction selection has been connected to the L and FWD terminal, and the motor rotates clockwise; to make the motor rotate counterclockwise, just connect the cord to the REV terminal. For forward and reverse rotation, connect FWD and REV terminals to the rotation direction selector switch Sw2.

注：型号WS-L可选择面板按键控制正反转，或是手动接后面板

Note: Model WS-L allows controlling forward and reverse rotation with the panel button, or manually connect rear panel wiring.

## ■ 电机制动停止 MOTOR BRAKE STOPS

当电机停止运转时，断开SW3，电机内失电电磁制动器刹车，电机电磁制动，保持负载。在电机正常运转中，不允许断开SW3,否则电机及电机内的失电电磁制动器将烧坏。

When the motor stops running, disconnect SW3, the de-energized electromagnetic brake in the motor brakes, and the motor brakes and maintains the load. In the normal operation of the motor, it is not allowed to disconnect SW3, or else the motor and the de-energized electromagnetic brake in the motor will burn.

### ● 特别注意 Special Note

B1、B2通电，失电电磁制动器不刹车；B1、B2断电，失电电磁制动器刹车。刹车电源开关必须与电机调速开关同步。

When B1 and B2 are energized, the de-energized electromagnetic brake won't brake; when B1 and B2 are de-energized, the de-energized electromagnetic brake brakes. Brake power switch must be synchronized with the motor speed control switch.

## ■ 运转操作 Running Operation

将调速器与电机按图连接，然后打开AC电源。闭合SW3，电机内失电电磁制动器通电，电磁制动失效,此时将面板上的开关切换到RUN,电机开始旋转。

Connect the speed governor to the motor as shown in the figure,and then turn on the AC power.Close Sw3, the de-energized electromagnetic brake in the motor is energized ,and the electromagnetic brake fails; the switch on the turns to RUN, and the motor starts to rotate.

## ■ 转速调整 Speed Adjustment

顺时针旋转面板上的调速器旋钮，电机转速增加，电机调整范围：50Hz:90~1300r/min 60Hz:90~1600r/min。

Rotate the speed control knob clockwise on the panel, and the motor speed increases; the range of adjustment: 50Hz: 90 ~1300r/min; 60Hz:90~1600r/min.

### ● 特别注意 Special Note

严禁使用SW1电源开关作为运行/制动开关开/停产调速器，并使用电机停止制动保持负载，否则易造成调速器损坏。现时由于调速器每次开电源时其内部电路有充电时间，故无法立即起动电机，动作亦会不正常。

Do not use SW1 power switch as the start/stop speed governor of running/brake switch and stop braking with the motor and hold the load, or else it will damage the speed governor easily. At present, internal circuit needs time to charge when the speed governor is turned on every time, the motor won't be started immediately, and the action will be abnormal.

## ■ 停止 STOP

将调速器面板上的开关切换到STOP，电机停止。

Turn the switch on the governor panel to STOP, and the motor stops.

注：此开关并非电源开关，若电机长期停止运转，则请另设电源开关。

NOTE: This switch is not a power switch. If the motor stops running for a long time, please equip a separate power switch.

## ■ 外部接连 External Connect

注：型 号WX-K可选择面板按键控制正反转或选择外接开关时，由FWD及REV外接开关K1及K2控制。电机。K1,K2可直接PLC控制。外接电位器连接于0~10V模拟量AVI输入端。

Note: Model WX-K allows controlling forward and reverse rotation with the panel button, or Choose External switch control, FWD&REV buttons connect with external switch K1&K2 to motor,K1.K2 can connect witch PLC to control motor directly. External connect potentiometer with 0-10V Analog AVI input port.

# 微型直流电机

## MICRO DC MOTOR

## 各型号电机性能MOTOR PERFORMANCE

**60DC**

10W/15W/20W

| 机座号 MODEL | 电压V VOLTAGE | 功率W POWER | 负载参数 LOAD PARAMETERS 转速SPEED r/min | 力矩TORQUE kg·cm | 电流A≤ CURRENT | 电刷寿命h BRUSH LIFE | 电机重量kg MOTOR WEIGHT |
|---|---|---|---|---|---|---|---|
| 60DC10GV12R16 | 12 | 10 | 1600 | 0.62 | 1.24 | 2000 | 0.7 |
| 60DC10GV24R16 | 24 | 10 | 1600 | 0.62 | 0.62 | 2000 | 0.7 |
| 60DC15GV12R16 | 12 | 15 | 1600 | 0.93 | 1.87 | 2000 | 0.9 |
| 60DC15GV24R16 | 24 | 15 | 1600 | 0.93 | 0.93 | 2000 | 0.9 |
| 60DC20GV12R16 | 12 | 20 | 1600 | 1.24 | 2.49 | 2000 | 0.9 |
| 60DC20GV24R16 | 24 | 20 | 1600 | 1.24 | 1.24 | 2000 | 0.9 |

## 减速箱减速比性能对照表 REDUCTION RATIO PERFORMANCE CHART

| 转速 r/min SPEED | 减速比 REDUCTION RATIO | 3 | 3.6 | 5 | 6 | 7.5 | 10 | 12.5 | 15 | 18 | 20 | 25 | 30 |
|---|---|---|---|---|---|---|---|---|---|---|---|---|---|
| 1600 | 出力轴转速r/min OUTPUT BEARING SPEED | 533 | 444 | 320 | 267 | 213 | 160 | 128 | 107 | 89 | 80 | 64 | 53 |
| | 额定转矩N·m RATED TORQUE | 0.129 | 0.154 | 0.215 | 0.259 | 0.324 | 0.43 | 0.53 | 0.64 | 0.769 | 0.77 | 0.97 | 1.16 |
| 转速 r/min SPEED | 减速比 REDUCTION RATIO | 36 | 40 | 50 | 60 | 75 | 90 | 100 | 120 | 150 | 180 | 200 | |
| 1600 | 出力轴转速r/min OUTPUT BEARING SPEED | 44 | 40 | 32 | 27 | 21 | 18 | 16 | 13 | 11 | 9 | 8 | |
| | 额定转矩N·m RATED TORQUE | 1.39 | 1.55 | 1.93 | 2.32 | 3 | 3 | 3 | 3 | 3 | 3 | 3 | |

标准减速箱
STANDARD GEARBOX
60GK □H

减速箱型号中的□为减速比的数值
速比：1:3~200
□ in gearbox model indicates the reduction ratio (1:3~200)

## 外形尺寸(CAD) DIMENSIONS

### 60DC(10W/15W)

圆轴电机
Round-axis motor

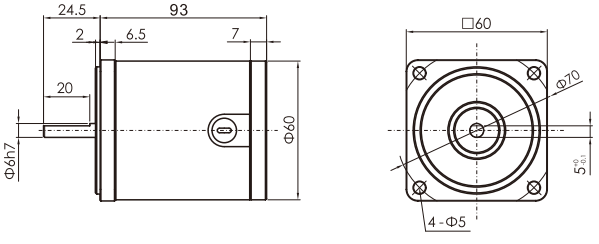


### 60DC(10W/15W)

组合：电机+标准减速箱（减速比：1:3~200）
Combination:motor + standard gearbox (reduction ratio: 1:3~200)

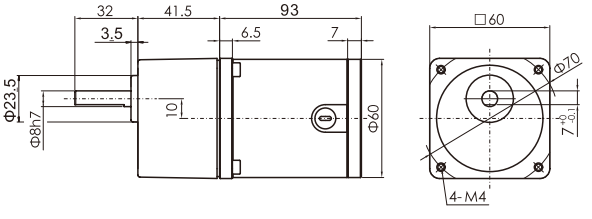

# 70DC

20W/30W

## 各型号电机性能 MOTOR PERFORMANCE

| 机座号 MODEL | 电压V VOLTAGE | 功率W POWER | 负载参数 LOAD PARAMETERS 转速SPEED r/min | 力矩TORQUE kg·cm | 电流A≤ CURRENT | 电刷寿命h BRUSH LIFE | 电机重量kg MOTOR WEIGHT |
|---|---|---|---|---|---|---|---|
| 70DC20GV12R16 | 12 | 20 | 1600 | 1.24 | 2.49 | 2000 | 1.0 |
| 70DC20GV24R16 | 24 | 20 | 1600 | 1.24 | 1.24 | 2000 | 1.0 |
| 70DC20GV90R16 | 90 | 20 | 1600 | 1.24 | 0.33 | 2000 | 1.0 |
| 70DC30GV12R16 | 12 | 30 | 1600 | 1.86 | 3.73 | 2000 | 1.1 |
| 70DC30GV24R16 | 24 | 30 | 1600 | 1.86 | 1.87 | 2000 | 1.1 |
| 70DC30GV90R16 | 90 | 30 | 1600 | 1.86 | 0.50 | 2000 | 1.1 |

## 减速箱减速比性能对照表 REDUCTION RATIO PERFORMANCE CHART

| 转速 r/min SPEED | 减速比 REDUCTION RATIO | 3 | 3.6 | 5 | 6 | 7.5 | 10 | 12.5 | 15 | 18 | 20 | 25 | 30 |
|---|---|---|---|---|---|---|---|---|---|---|---|---|---|
| 1600 | 出力轴转速r/min OUTPUT BEARING SPEED | 533 | 444 | 320 | 267 | 213 | 160 | 128 | 107 | 89 | 80 | 64 | 53 |
| | 额定转矩N·m RATED TORQUE | 0.26 | 0.31 | 0.43 | 0.52 | 0.86 | 0.86 | 1.08 | 1.29 | 1.39 | 1.55 | 1.93 | 2.32 |
| 转速 r/min SPEED | 减速比 REDUCTION RATIO | 36 | 40 | 50 | 60 | 75 | 90 | 100 | 120 | 150 | 180 | 200 | |
| 1600 | 出力轴转速r/min OUTPUT BEARING SPEED | 44 | 40 | 32 | 27 | 21 | 18 | 16 | 13 | 11 | 9 | 8 | |
| | 额定转矩N·m RATED TORQUE | 2.78 | 3.09 | 3.86 | 4.46 | 5 | 5 | 5 | 5 | 5 | 5 | 5 | |

标准减速箱
STANDARD GEARBOX
70GK □H

减速箱型号中的□为减速比的数值
速比：1:3~200
□ in gearbox model indicates the reduction ratio (1:3~200)

## 外形尺寸 (CAD) DIMENSIONS

### 70DC(20W/36W)

圆轴电机
Round-axis motor

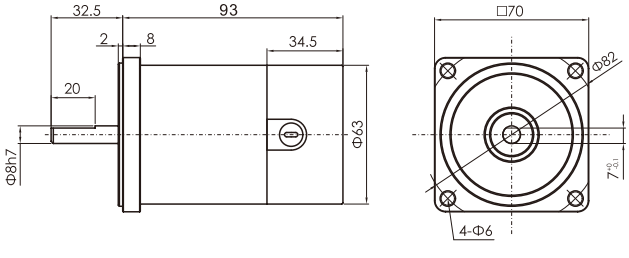


### 70DC(20W/36W)

组合：电机+标准减速箱（减速比：1:3~200）
Combination: motor + standard gearbox (reduction ratio: 1:3~200)

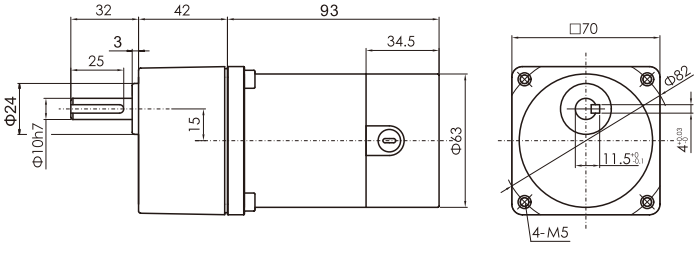

# 80DC

30W/60W

## 各型号电机性能 MOTOR PERFORMANCE

| 机座号 MODEL | 电压V VOLTAGE | 功率W POWER | 负载参数 LOAD PARAMETERS 转速SPEED r/min | 力矩TORQUE kg·cm | 电流A≤ CURRENT | 电刷寿命h BRUSH LIFE | 电机重量kg MOTOR WEIGHT |
|---|---|---|---|---|---|---|---|
| 80DC30GV12R16 | 12 | 30 | 1600 | 1.86 | 3.73 | 2000 | 1.8 |
| 80DC30GV24R16 | 24 | 30 | 1600 | 1.86 | 1.87 | 2000 | 1.8 |
| 80DC30GV90R16 | 90 | 30 | 1600 | 1.86 | 0.50 | 2000 | 1.8 |
| 80DC60GV12R16 | 12 | 60 | 1600 | 3.73 | 7.46 | 2000 | 1.9 |
| 80DC60GV24R16 | 24 | 60 | 1600 | 3.73 | 3.73 | 2000 | 1.9 |
| 80DC60GV90R16 | 90 | 60 | 1600 | 3.73 | 1.00 | 2000 | 1.9 |

## 减速箱减速比性能对照表 REDUCTION RATIO PERFORMANCE CHART

| 转速 r/min SPEED | 减速比 REDUCTION RATIO | 3 | 3.6 | 5 | 6 | 7.5 | 10 | 12.5 | 15 | 18 | 20 | 25 | 30 |
|---|---|---|---|---|---|---|---|---|---|---|---|---|---|
| 1600 | 出力轴转速r/min OUTPUT BEARING SPEED | 533 | 444 | 320 | 267 | 213 | 160 | 128 | 107 | 89 | 80 | 64 | 53 |
| | 额定转矩mN·m RATED TORQUE | 0.386 | 0.464 | 0.644 | 0.773 | 0.966 | 1.288 | 1.61 | 1.932 | 2.318 | 2.576 | 3.22 | 3.477 |
| 转速 r/min SPEED | 减速比 REDUCTION RATIO | 36 | 40 | 50 | 60 | 75 | 90 | 100 | 120 | 150 | 180 | 200 | |
| 1600 | 出力轴转速r/min OUTPUT BEARING SPEED | 44 | 40 | 32 | 27 | 21 | 18 | 16 | 13 | 11 | 9 | 8 | |
| | 额定转矩mN·m RATED TORQUE | 4.173 | 4.63 | 5.796 | 6.995 | 8 | 8 | 8 | 8 | 8 | 8 | 8 | |

标准减速箱
STANDARD GEARBOX
80GK □H

直角中空减速箱
RIGHT ANGLE HOLLOW GEARBOX
L80GK □RC

直角中实减速箱
RIGHT ANGLE SOLID GEARBOX
L80GK □RT

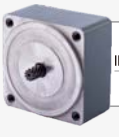

中间减速箱
INTERMEDIATE GEARBOX
80GM10

减速箱型号中的□为减速比的数值
速比：1:3~200;中间减速箱：( 1 : 10 )
□ in gearbox model indicates the reduction ratio (1:3~200);MIDDLE GEARBOX:( 1 : 10 )

# 外形尺寸(CAD) DIMENSIONS

## 80DC(30W/60W)

圆轴电机

Round-axis motor

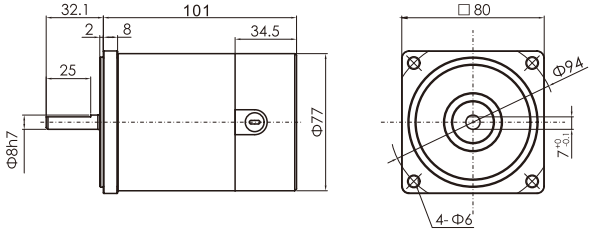


## 80DC(30W/60W)

组合：电机+标准减速箱（减速比：1:3~200）

Combination:motor + standard gearbox (reduction ratio: 1:3~200)

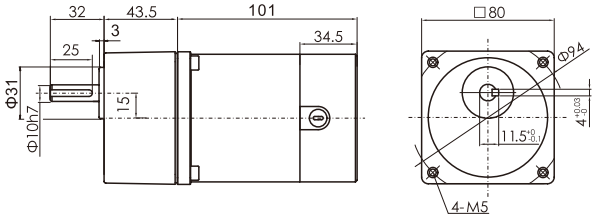


## 80DC(30W/60W)

组合:电机+中间减速箱+标准减速箱(减速比:1:200~1800)

Combination:motor+intermediate gearbox+standard gearbox(reduction ratio:1:200~1800)

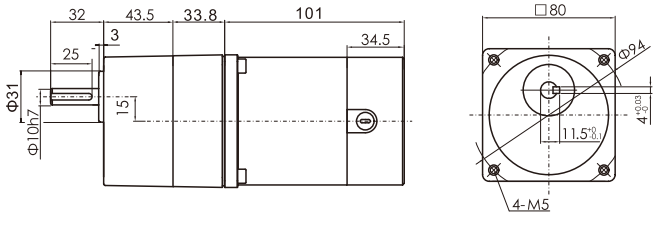


## 80DC(30W/60W)

组合：电机+直角中实减速箱

减速比：1:3~200

Combination: motor + right angle solid gearbox

Reduction ratio: 1:3~200

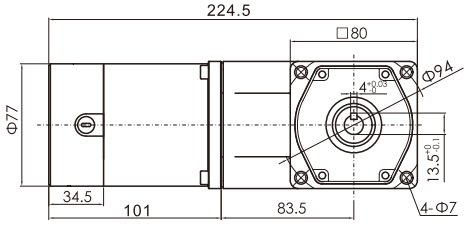


## 80DC(30W/60W)

组合:电机+中间减速箱+直角中实减速箱

减速比:1:200~1800

Combination:motor+intermediate gearbox+right angle solid gearbox

Reduction ratio:1:200~1800

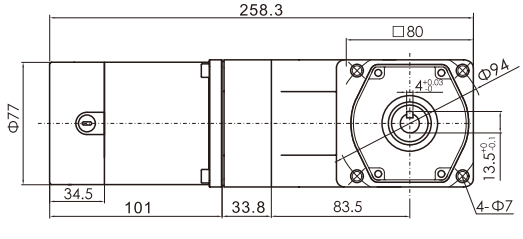

## 外形尺寸(CAD) DIMENSIONS

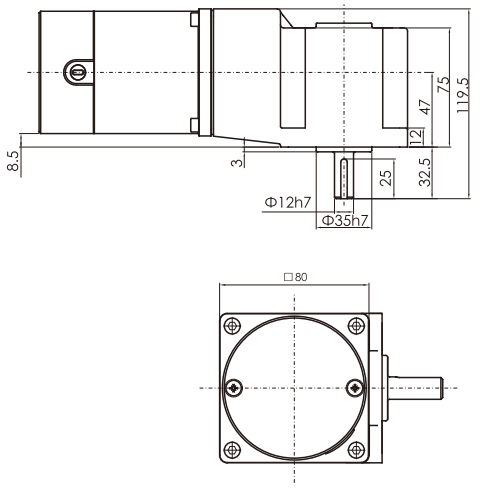


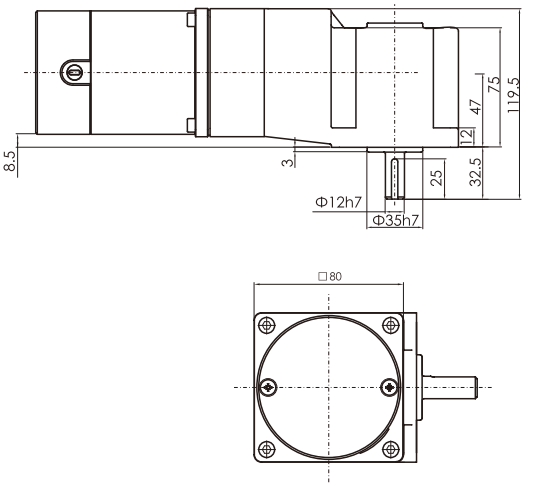


### 80DC(30W/60W)

组合：电机+直角中空减速箱
减速比：1:3~200

Combination: motor + right angle hollow gearbox
Reduction ratio: 1:3~200

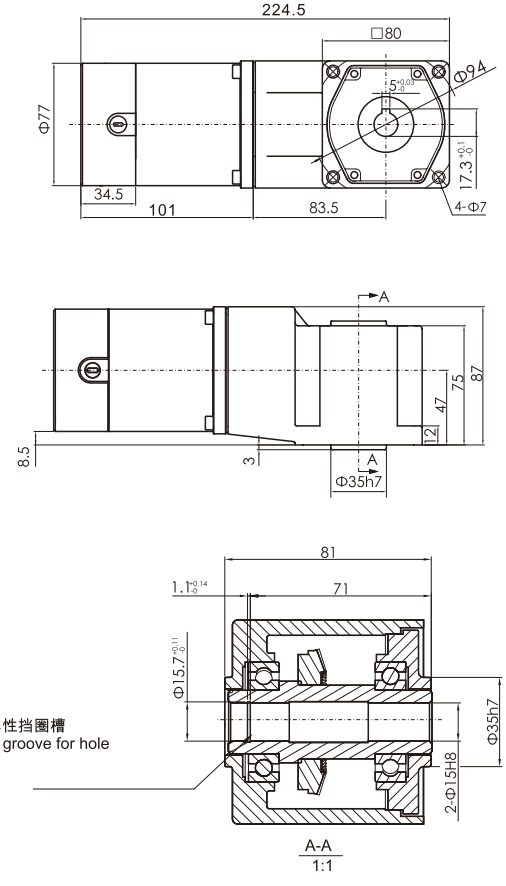


### 80DC(30W/60W)

组合:电机+中间减速箱+直角中空减速箱
(减速比:1:200~1800)

Combination:motor+intermediate gearbox+right angle hollow gearbox
(reduction ratio:1:200~1800)

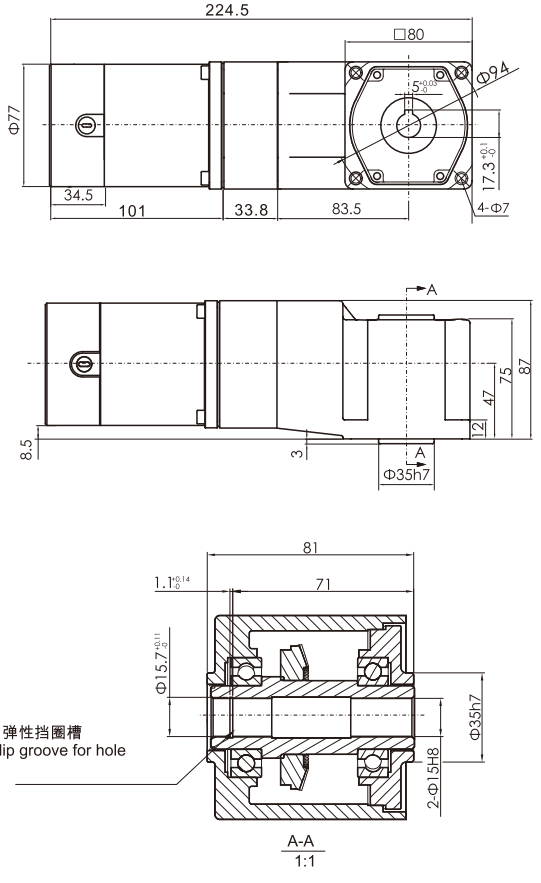

# 90DC

40W/70W
65W/120W
100W/200W

## 各型号电机性能 MOTOR PERFORMANCE

| 机座号 MODEL | 电压V VOLTAGE | 功率W POWER | 负载参数 LOAD PARAMETERS 转速SPEED r/min | 力矩TORQUE kg·cm | 电流A≤ CURRENT | 电刷寿命h BRUSH LIFE | 电机重量kg MOTOR WEIGHT |
|---|---|---|---|---|---|---|---|
| 90DC40GV12R16 | 12 | 40 | 1600 | 2.48 | 4.98 | 2000 | 1.9 |
| 90DC40GV24R16 | 24 | 40 | 1600 | 2.48 | 2.49 | 2000 | 1.9 |
| 90DC40GV90R16 | 90 | 40 | 1600 | 2.48 | 0.66 | 2000 | 1.9 |
| 90DC70GV12R16 | 12 | 70 | 1600 | 4.35 | 8.71 | 2000 | 2.0 |
| 90DC70GV24R16 | 24 | 70 | 1600 | 4.35 | 4.35 | 2000 | 2.0 |
| 90DC70GV90R16 | 90 | 70 | 1600 | 4.35 | 1.16 | 2000 | 2.0 |
| 90DC65GV12R16 | 12 | 65 | 1600 | 4.04 | 8.08 | 2000 | 2.0 |
| 90DC65GV24R16 | 24 | 65 | 1600 | 4.04 | 4.04 | 2000 | 2.0 |
| 90DC65GV90R16 | 90 | 65 | 1600 | 4.04 | 1.08 | 2000 | 2.0 |
| 90DC65GV180R16 | 180 | 65 | 1600 | 4.04 | 0.54 | 2000 | 2.0 |
| 90DC120GV12R16 | 12 | 120 | 1600 | 7.45 | 14.93 | 2000 | 2.2 |
| 90DC120GV24R16 | 24 | 120 | 1600 | 7.45 | 7.46 | 2000 | 2.2 |
| 90DC120GV90R16 | 90 | 120 | 1600 | 7.45 | 1.99 | 2000 | 2.2 |
| 90DC120GV180R16 | 180 | 120 | 1600 | 7.45 | 1.00 | 2000 | 2.2 |
| 90DC100GV12R16 | 12 | 100 | 1600 | 6.21 | 12.44 | 2000 | 2.1 |
| 90DC100GV24R16 | 24 | 100 | 1600 | 6.21 | 6.22 | 2000 | 2.1 |
| 90DC100GV90R16 | 90 | 100 | 1600 | 6.21 | 1.66 | 2000 | 2.1 |
| 90DC100GV180R16 | 180 | 100 | 1600 | 6.21 | 0.83 | 2000 | 2.1 |
| 90DC200GV12R16 | 12 | 200 | 1600 | 12.42 | 24.88 | 2000 | 2.3 |
| 90DC200GV24R16 | 24 | 200 | 1600 | 12.42 | 12.44 | 2000 | 2.3 |
| 90DC200GV90R16 | 90 | 200 | 1600 | 12.42 | 3.32 | 2000 | 2.3 |
| 90DC200GV180R16 | 180 | 200 | 1600 | 12.42 | 1.66 | 2000 | 2.3 |

## 减速箱减速比性能对照表 REDUCTION RATIO PERFORMANCE CHART

■ 40W/70W

| 转速 r/min SPEED | 减速比 REDUCTION RATIO | 3 | 3.6 | 5 | 6 | 7.5 | 10 | 12.5 | 15 | 18 | 20 | 25 | 30 |
|---|---|---|---|---|---|---|---|---|---|---|---|---|---|
| 1600 | 出力轴转速r/min OUTPUT BEARING SPEED | 533 | 444 | 320 | 267 | 213 | 160 | 128 | 107 | 89 | 80 | 64 | 53 |
| | 额定转矩N·m RATED TORQUE | 0.52 | 0.62 | 0.86 | 0.86 | 1.29 | 1.72 | 1.93 | 2.32 | 2.78 | 3.09 | 3.87 | 4.64 |
| 转速 r/min SPEED | 减速比 REDUCTION RATIO | 36 | 40 | 50 | 60 | 75 | 90 | 100 | 120 | 150 | 180 | 200 | |
| 1600 | 出力轴转速r/min OUTPUT BEARING SPEED | 44 | 40 | 32 | 27 | 21 | 18 | 16 | 13 | 11 | 9 | 8 | |
| | 额定转矩N·m RATED TORQUE | 5.57 | 6.19 | 6.96 | 8.35 | 10.44 | 12.53 | 13.92 | 16.7 | 20 | 20 | 20 | |

■ 65W/120W

| 转速 r/min SPEED | 减速比 REDUCTION RATIO | 3 | 3.6 | 5 | 6 | 7.5 | 10 | 12.5 | 15 | 18 | 20 | 25 | 30 |
|---|---|---|---|---|---|---|---|---|---|---|---|---|---|
| 1600 | 出力轴转速r/min OUTPUT BEARING SPEED | 533 | 444 | 320 | 267 | 213 | 160 | 128 | 107 | 89 | 80 | 64 | 53 |
| | 额定转矩N·m RATED TORQUE | 0.838 | 1.0 | 1.397 | 1.677 | 2.096 | 2.975 | 3.144 | 3.773 | 4.527 | 5.03 | 6.288 | 7.545 |
| 转速 r/min SPEED | 减速比 REDUCTION RATIO | 36 | 40 | 50 | 60 | 75 | 90 | 100 | 120 | 150 | 180 | 200 | |
| 1600 | 出力轴转速r/min OUTPUT BEARING SPEED | 44 | 40 | 32 | 27 | 21 | 18 | 16 | 13 | 11 | 9 | 8 | |
| | 额定转矩N·m RATED TORQUE | 9.054 | 10.06 | 11.32 | 13.58 | 16.977 | 20 | 20 | 20 | 20 | 20 | 20 | |

■ 100W/200W

| 转速 r/min SPEED | 减速比 REDUCTION RATIO | 3 | 3.6 | 5 | 6 | 7.5 | 10 | 12.5 | 15 | 18 | 20 | 25 | 30 |
|---|---|---|---|---|---|---|---|---|---|---|---|---|---|
| 1600 | 出力轴转速r/min OUTPUT BEARING SPEED | 533 | 444 | 320 | 267 | 213 | 160 | 128 | 107 | 89 | 80 | 64 | 53 |
| | 额定转矩N·m RATED TORQUE | 1.29 | 1.55 | 2.15 | 2.58 | 3.22 | 4.3 | 4.83 | 5.8 | 6.96 | 7.74 | 9.67 | 11.6 |
| 转速 r/min SPEED | 减速比 REDUCTION RATIO | 36 | 40 | 50 | 60 | 75 | 90 | 100 | 120 | 150 | 180 | 200 | |
| 1600 | 出力轴转速r/min OUTPUT BEARING SPEED | 44 | 40 | 32 | 27 | 21 | 18 | 16 | 13 | 11 | 9 | 8 | |
| | 额定转矩N·m RATED TORQUE | 13.92 | 15.47 | 17.41 | 20 | 20 | 20 | 20 | 20 | 20 | 20 | 20 | |

标准减速箱
STANDARD GEARBOX
90GF □H

带耳减速箱
EARED GEARBOX
90GF □HE

直角中空减速箱
RIGHT ANGLE HOLLOW GEARBOX
L90GF □RC

中间减速箱
INTERMEDIATE GEARBOX
90GM10

直角中实减速箱
RIGHT ANGLE SOLID GEARBOX
L90GF □RT

减速箱型号中的□为减速比的数值
速比：1:3~200;中间减速箱：( 1 : 10 )
□ in gearbox model indicates the reduction ratio (1:3~200);MIDDLE GEARBOX:( 1 : 10 )

# 外形尺寸(CAD) DIMENSIONS

## 90DC(40W/70W)

圆轴电机

Round-axis motor

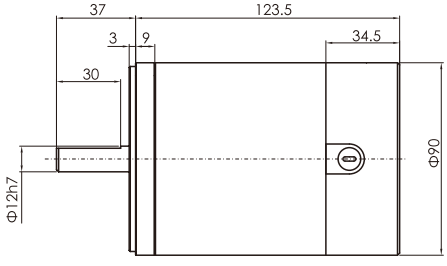


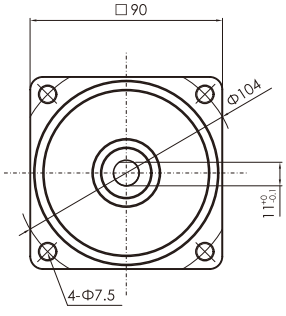


## 90DC(40W/70W)

组合：电机+标准减速箱（减速比：1:3~200）

Combination:motor + standard gearbox (reduction ratio: 1:3~200)

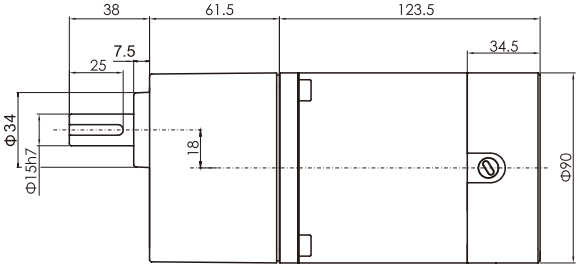


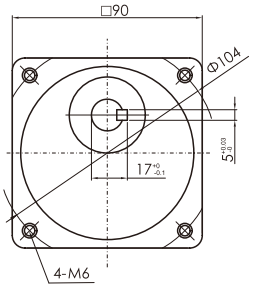


## 90DC(40W/70W)

组合:电机+中间减速箱+标准减速箱(减速比:1:200~1800)

Combination:motor +intermediate gearbox+standard gearbox(reduction ratio:1:200~1800)

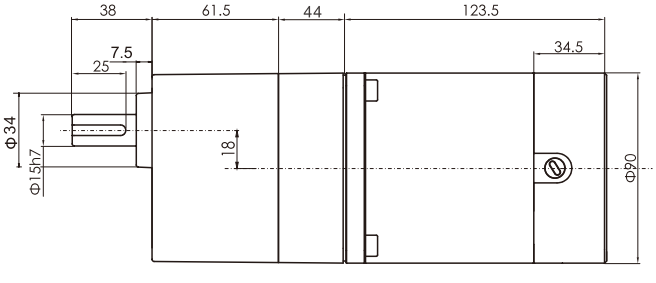


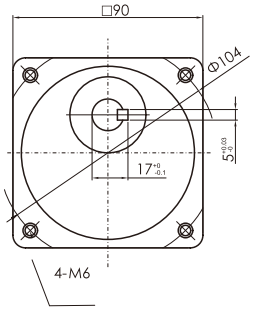

# 外形尺寸(CAD) DIMENSIONS

## 90DC(40W/70W)

组合：电机+带耳减速箱（减速比：1:3~200）

Combination: motor + eared gear (reduction ratio: 1:3~200)

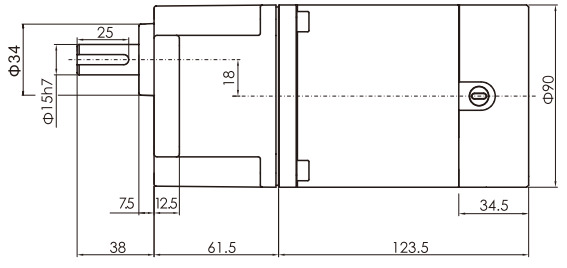


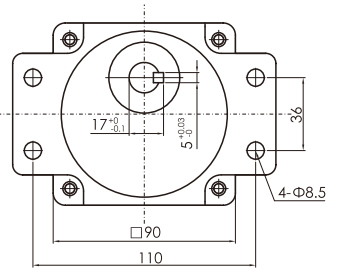


## 90DC(40W/70W)

组合:电机+中间减速箱+带耳减速箱(减速比:1:200~1800)

Combination:motor+intermediate gearbox+eared gear(reduction ratio:1:200~1800)

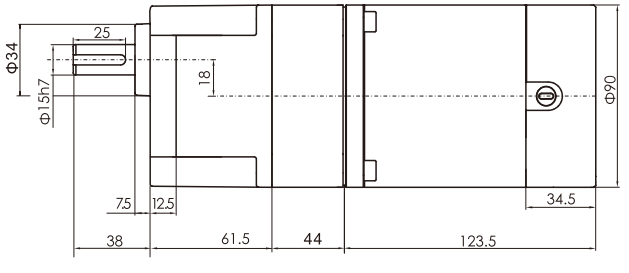


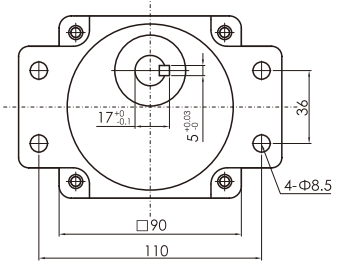

# 外形尺寸(CAD)DIMENSIONS

## 90DC(40W/70W)

组合：电机+直角中实减速箱

减速比：1:3~200

Combination:motor + right angle solid gearbox

Reduction ratio: 1:3~200

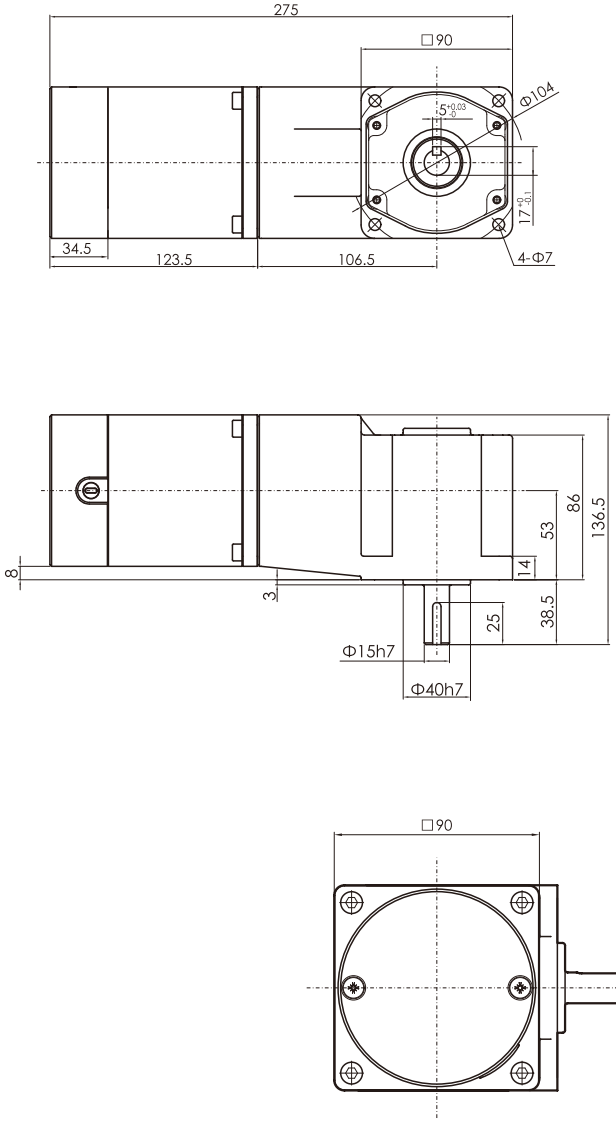


## 90DC(40W/70W)

组合:电机+中间减速箱+直角中实减速箱

减速比:1:200~1800

Combination:motor+intermediate gearbox+right angle solid gearbox

Reduction ratio:(1:200~1800)

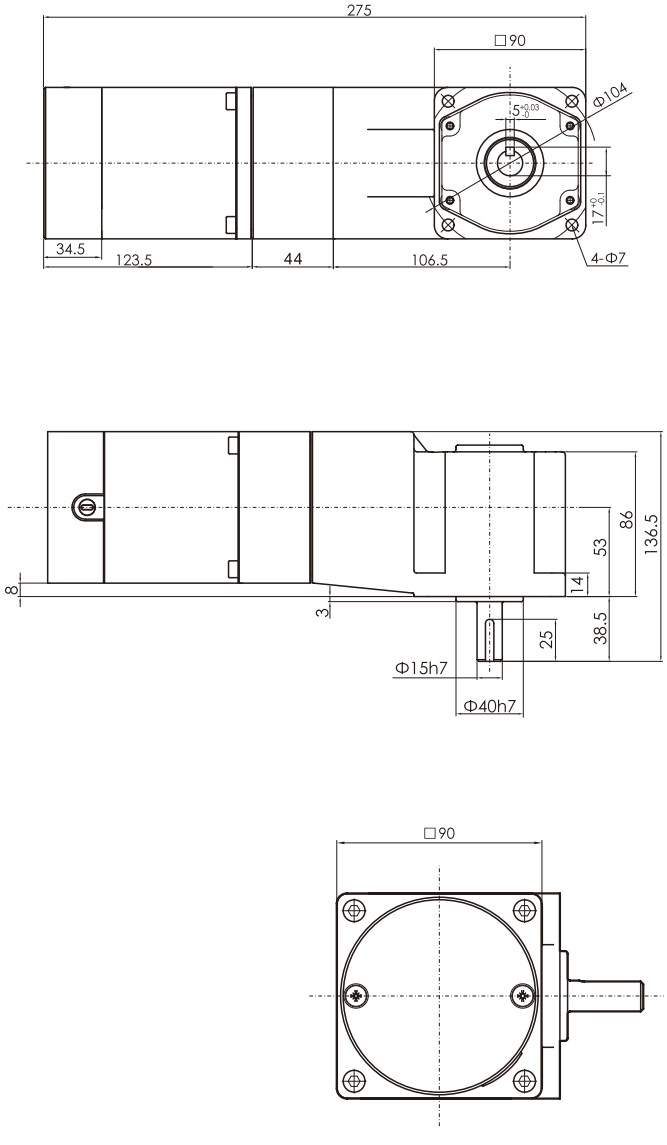

# 外形尺寸(CAD) DIMENSIONS

## 90DC(40W/70W)

组合：电机+直角中空减速箱
减速比：1:3~200
Combination:motor+right angle hollow gearbox
Reduction ratio:(1:3~200)

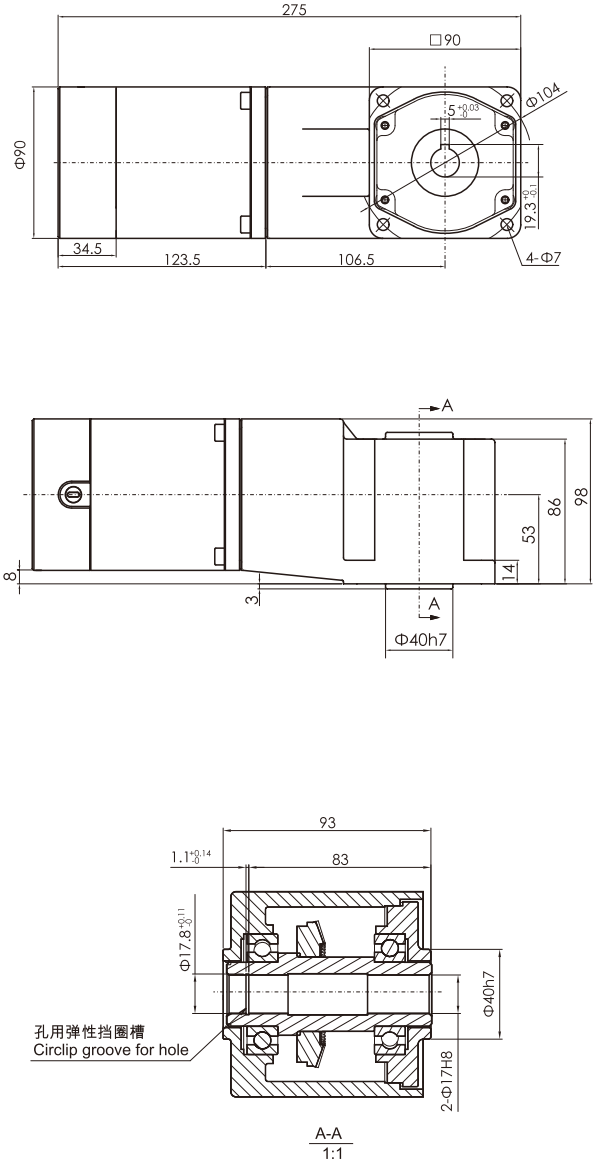


## 90DC(40W/70W)

组合:电机+中间减速箱+直角中空减速箱
减速比:1:200~1800
Combination:motor+intermediate gearbox+right angle hollow gearbox
Reduction ratio:(1:200~1800)

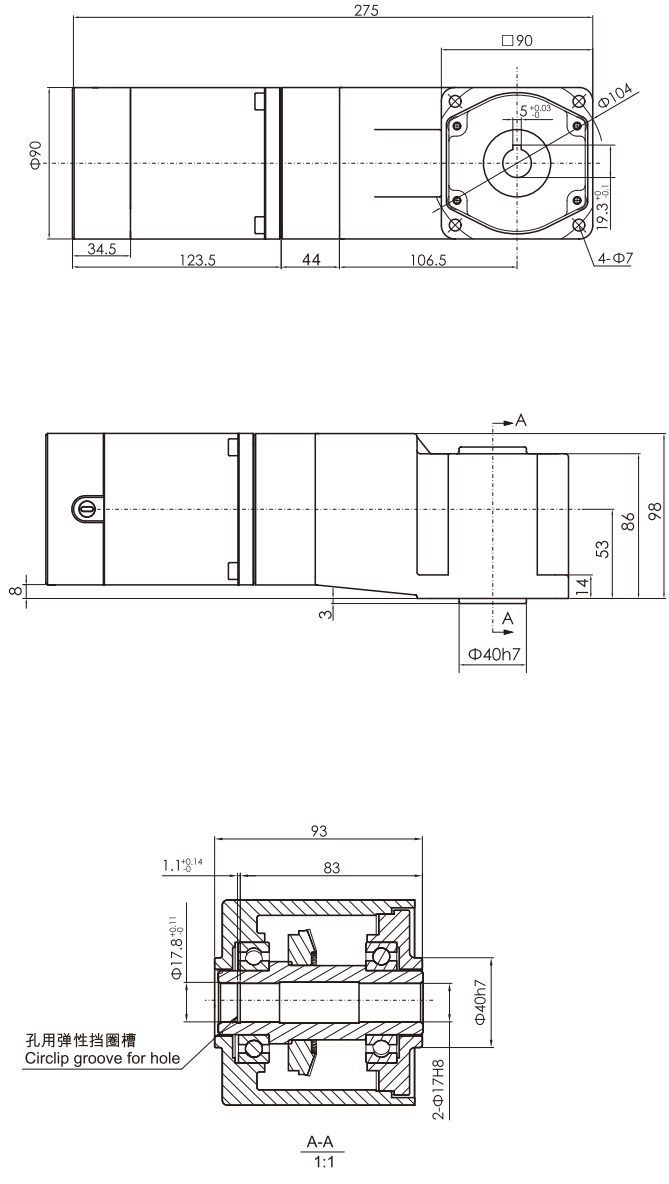

# 外形尺寸(CAD)DIMENSIONS

## 90DC(65W/120W)

### 圆轴电机

Round-axis motor

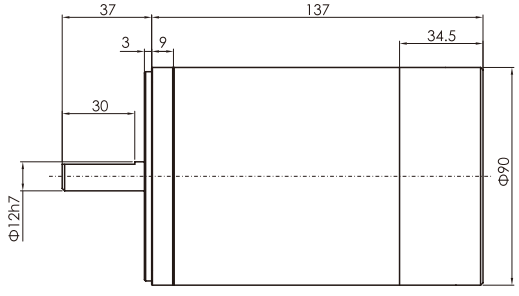


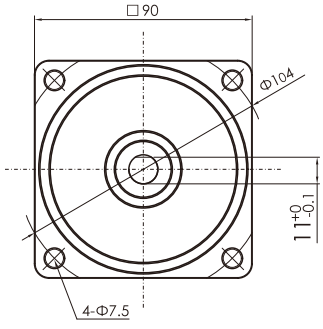


### 组合：电机+标准减速箱（减速比：1:3~200）

Combination: motor + standard gearbox (reduction ratio: 1:3~200)

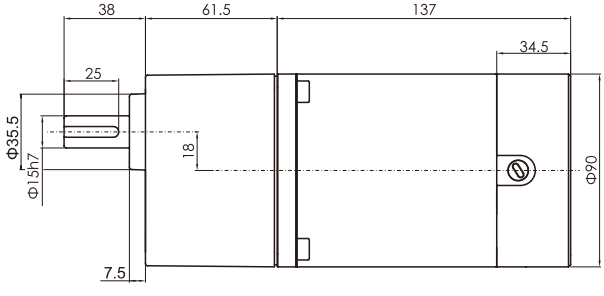


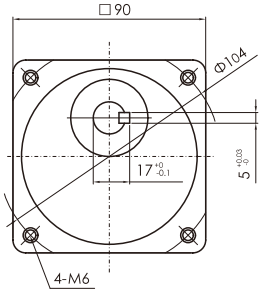


### 组合:电机+中间减速箱+标准减速箱(减速比:1:200~1800)

Combination:motor+intermediate gearbox+standard gearbox(reduction ratio:1:200~1800)

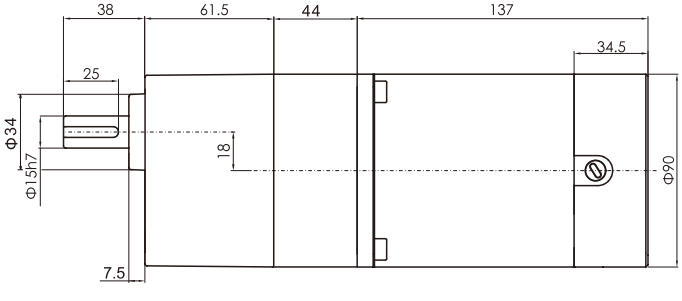


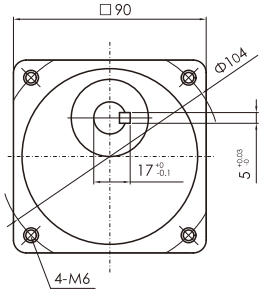

# 外形尺寸(CAD) DIMENSIONS

## 90DC(65W/120W)

组合：电机+带耳减速箱（减速比：1:3~200）

Combination: motor + eared gear (reduction ratio: 1:3~200)

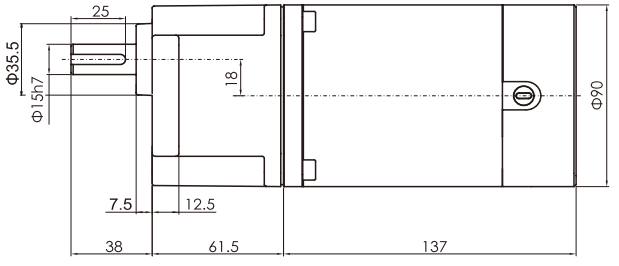


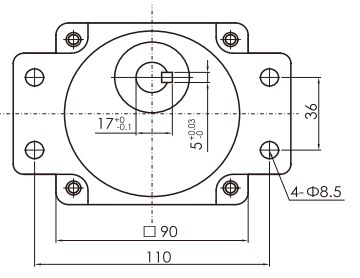


组合:电机+中间减速箱+带耳减速箱(减速比:1:200~1800)

Combination:motor+intermediate gearbox+eared gear(reduction ratio:1:200~1800)

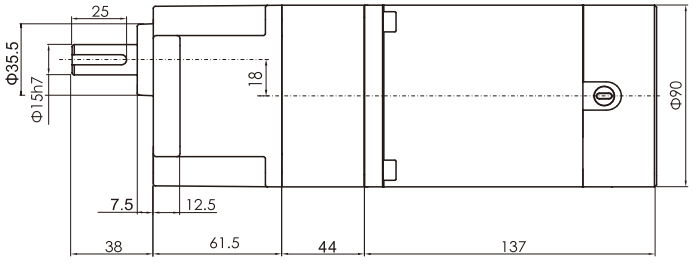


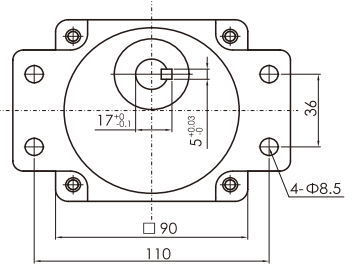

# 外形尺寸(CAD) DIMENSIONS

## 90DC(65W/120W)

组合：电机+直角中实减速箱（减速比：1:3~200）

Combination:motor + right angle solid gearbox
Reduction ratio: 1:3~200

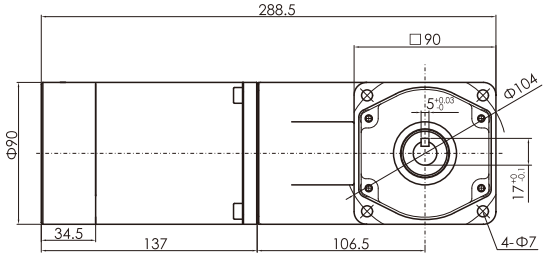


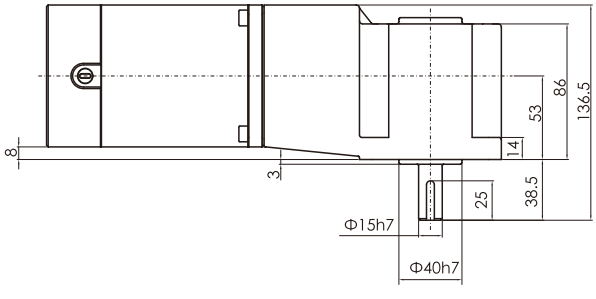


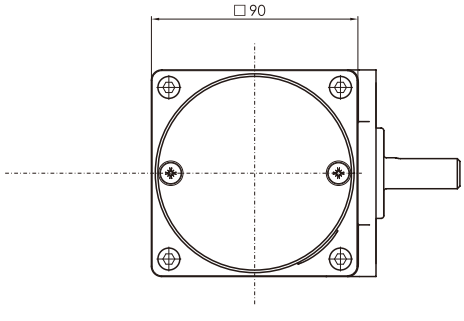


## 90DC(65W/120W)

组合:电机+中间减速箱+直角中实减速箱
(减速比:1:200~1800)

Combination:motor+intermediate gearbox+right angle solid gearbox
Reduction ratio:1:200~1800

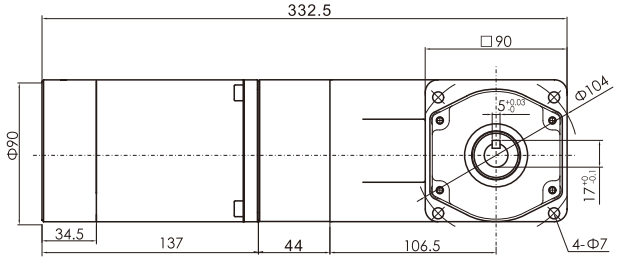


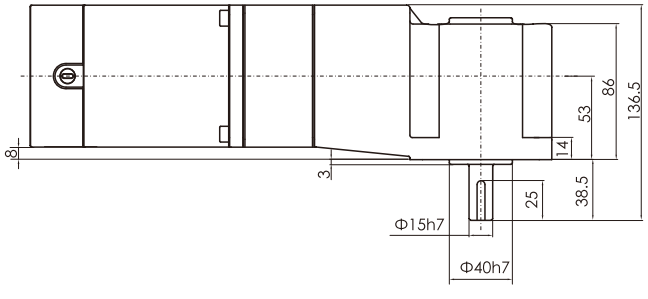


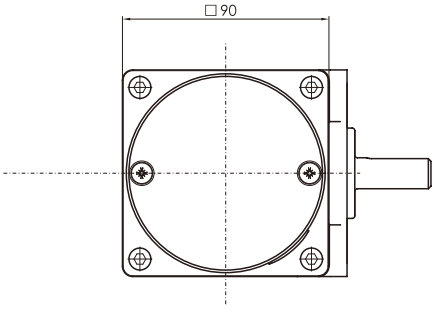

# 外形尺寸 (CAD) DIMENSIONS

## 90DC(65W/120W)

组合：电机+直角中空减速箱（减速比：1:3~200）

Combination: motor + right angle hollow gearbox
Reduction ratio: 1:3~200

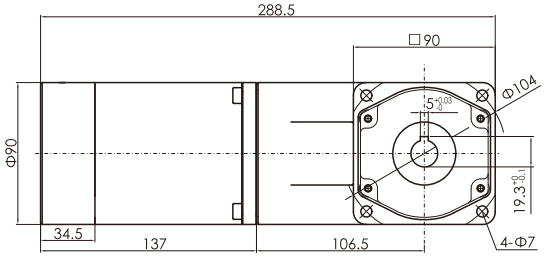


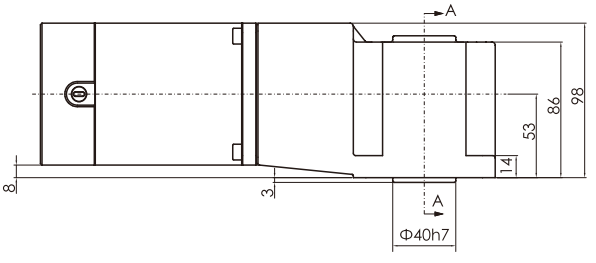


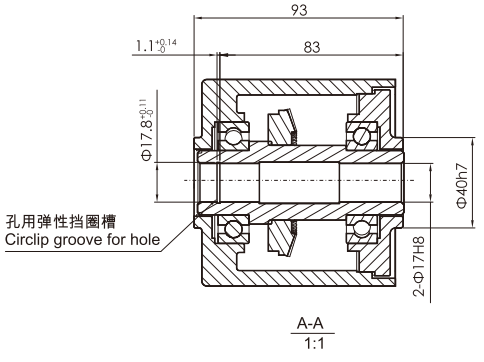


## 90DC(65W/120W)

组合:电机+中间减速箱+直角中空减速箱
(减速比:1:200~1800)

Combination:motor+intermediate gearbox+right angle hollow gearbox
Reduction ratio:1:200~1800

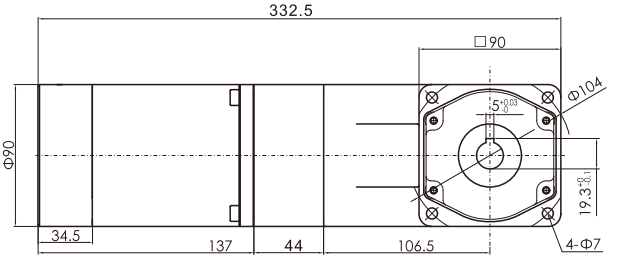


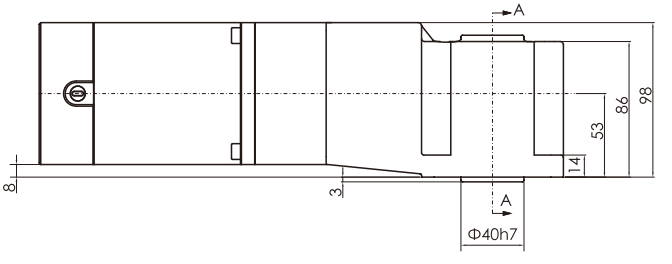


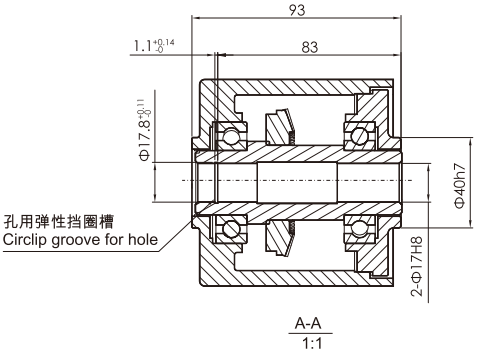

# 外形尺寸 (CAD) DIMENSIONS

## 90DC(100W/200W)

### 圆轴电机

Round-axis motor

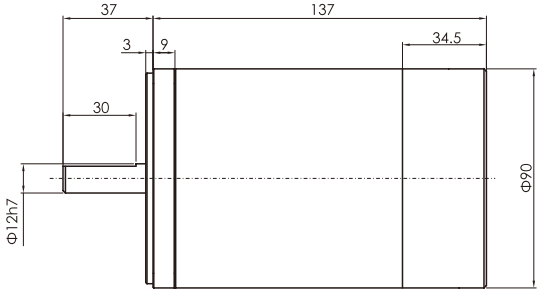


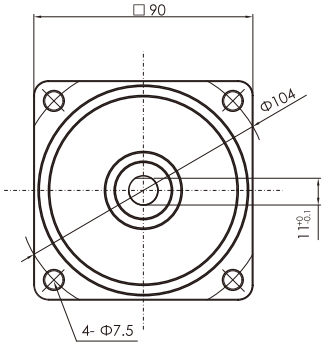


### 组合：电机+标准减速箱（减速比：1:3~200）

Combination:motor + standard gearbox (reduction ratio: 1:3~200)

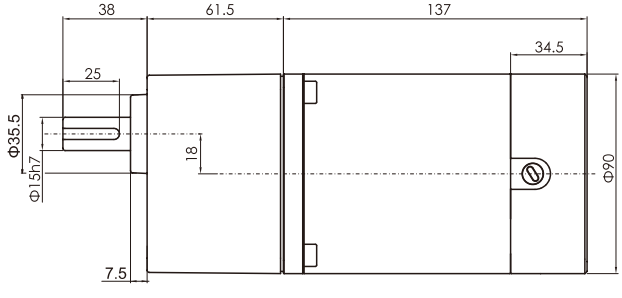


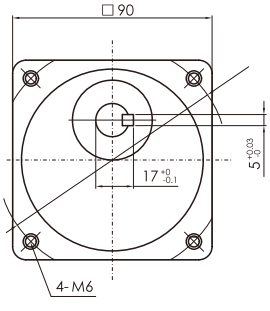


### 组合：电机+带耳减速箱（减速比：1:3~200）

Combination:motor + eared gear (reduction ratio: 1:3~200)

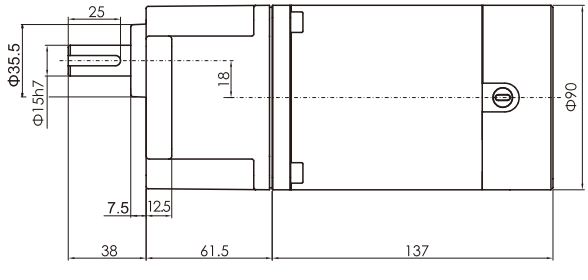


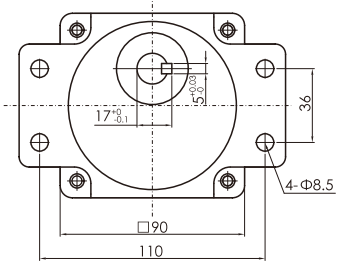

# 外形尺寸 (CAD) DIMENSIONS

## 90DC(100W/200W)

### 组合：电机+直角中实减速箱（减速比：1:3~200）

Combination: motor + right angle solid gearbox
Reduction ratio: 1:3~200

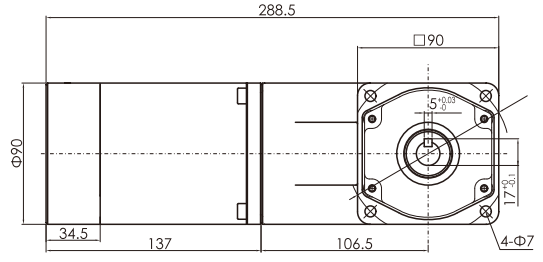


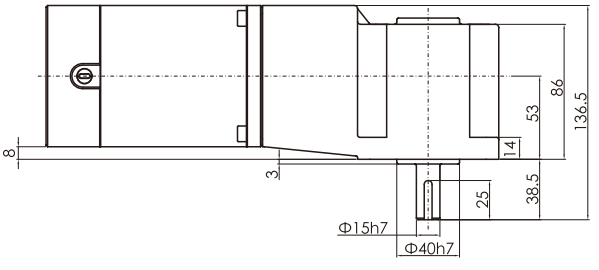


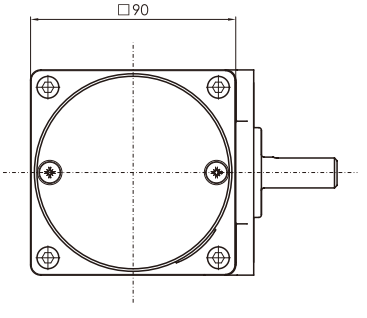


### 组合：电机+直角中空减速箱（减速比：1:3~200）

Combination: motor + right angle hollow gearbox
Reduction ratio: 1:3~200

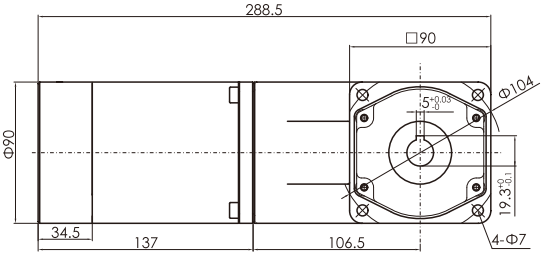


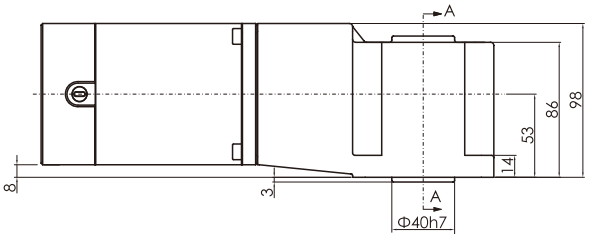


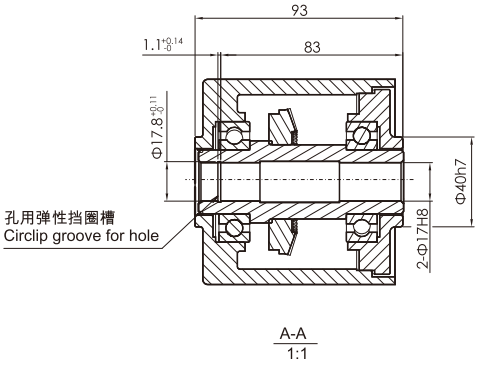

# 100DC

200W/300W

## 各型号电机性能 MOTOR PERFORMANCE

| 机座号 MODEL | 电压V VOLTAGE | 功率W POWER | 负载参数 LOAD PARAMETERS 转速SPEED r/min | 力矩TORQUE kg·cm | 电流A≤ CURRENT | 电刷寿命h BRUSH LIFE | 电机重量kg MOTOR WEIGHT |
|---|---|---|---|---|---|---|---|
| 100DC200GV24R18 | 24 | 200 | 1800 | 11.04 | 12.44 | 2000 | 2.4 |
| 100DC200GV90R18 | 90 | 200 | 1800 | 11.04 | 3.32 | 2000 | 2.4 |
| 100DC200GV180R18 | 180 | 200 | 1800 | 11.04 | 1.66 | 2000 | 2.4 |
| 100DC300GV24R18 | 24 | 300 | 1800 | 16.56 | 18.66 | 2000 | 2.5 |
| 100DC300GV90R18 | 90 | 300 | 1800 | 16.56 | 4.98 | 2000 | 2.5 |
| 100DC300GV180R18 | 180 | 300 | 1800 | 16.56 | 2.49 | 2000 | 2.5 |

## 减速箱减速比性能对照表 REDUCTION RATIO PERFORMANCE CHART

| 转速 r/min SPEED | 减速比 REDUCTION RATIO | 3 | 3.6 | 5 | 6 | 7.5 | 10 | 12.5 | 15 | 18 | 20 | 25 | 30 |
|---|---|---|---|---|---|---|---|---|---|---|---|---|---|
| 1800 | 出力轴转速r/min OUTPUT BEARING SPEED | 600 | 500 | 360 | 300 | 240 | 180 | 144 | 120 | 100 | 90 | 72 | 60 |
| | 额定转矩N·m RATED TORQUE | 2.578 | 3.094 | 4.297 | 5.156 | 6.446 | 8.594 | 10.74 | 11.6 | 13.92 | 15.47 | 19.34 | 23.21 |
| 转速 r/min SPEED | 减速比 REDUCTION RATIO | 36 | 40 | 50 | 60 | 75 | 90 | 100 | 120 | 150 | 180 | 200 | |
| 1800 | 出力轴转速r/min OUTPUT BEARING SPEED | 50 | 45 | 36 | 30 | 24 | 20 | 18 | 15 | 12 | 10 | 9 | |
| | 额定转矩N·m RATED TORQUE | 27.85 | 30.94 | 38.68 | 41.77 | 44 | 44 | 44 | 44 | 44 | 44 | 44 | |

标准减速箱
STANDARD GEARBOX
100GF □H

直角中空减速箱
RIGHT ANGLE HOLLOW GEARBOX
L100GF □RC

直角中实减速箱
RIGHT ANGLE SOLID GEARBOX
L100GF □RT

减速箱型号中的□为减速比的数值
速比：1:3~200
□ in gearbox model indicates the reduction ratio (1:3~200)

# 外形尺寸 (CAD) DIMENSIONS

## 100DC(200W/300W)

**圆轴电机**

Round-axis motor

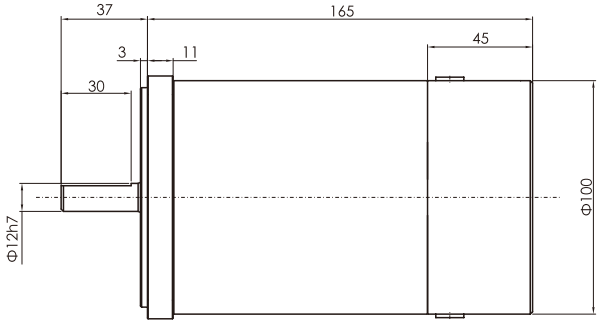


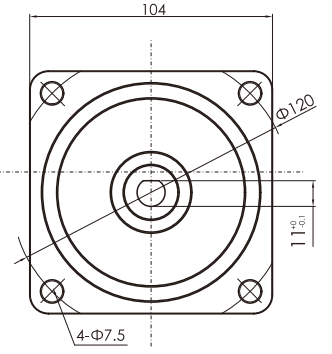


## 100DC(200W/300W)

**组合：电机+标准减速箱（减速比：1:3~200）**

Combination: motor + standard gearbox (reduction ratio: 1:3~200)

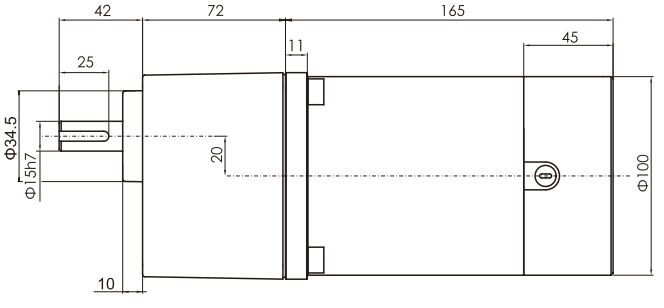


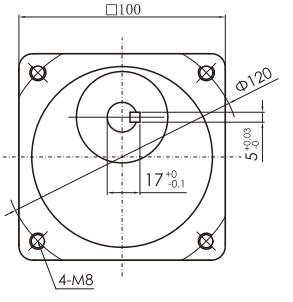

# 外形尺寸 (CAD) DIMENSIONS

## 100DC(200W/300W)

组合：电机+直角中实减速箱（减速比：1:3~200）

Combination: motor + right angle solid gearbox
Reduction ratio: 1:3~200

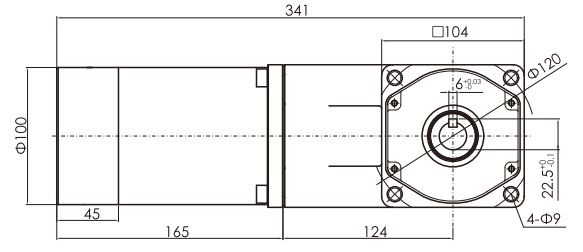


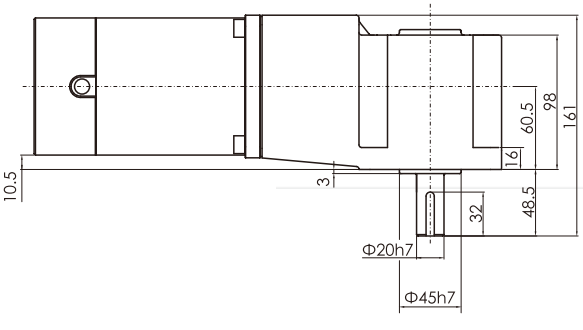


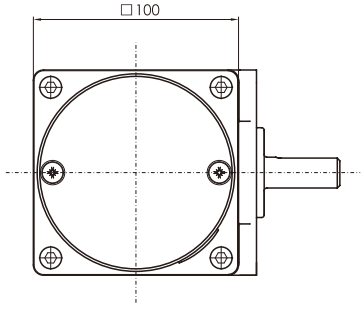


组合：电机+直角中空减速箱（减速比：1:3~200）

Combination: motor + right angle hollow gearbox
Reduction ratio: 1:3~200

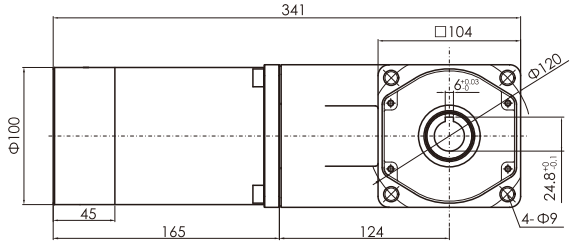


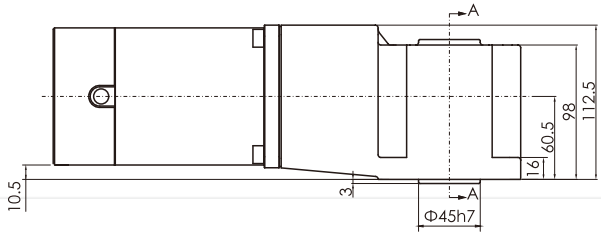


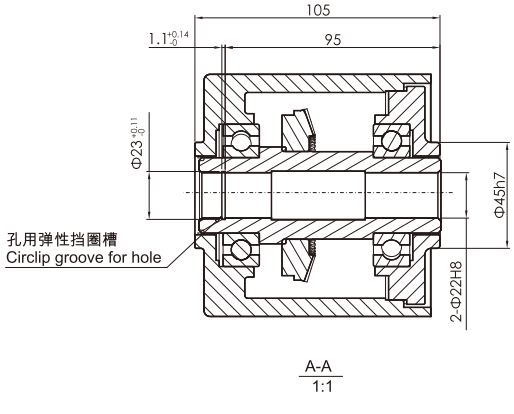

# 带接线盒减速电机选购指南 TERMINAL BOX DIRECTION

1、万鑫标配产品不带接线盒，如需订带接线盒的减速电机，需特别说明，且参考附图注明接线盒方向；

2、万鑫可根据客户需求将接线盒上、下、左、右4个方向调整，如客户无特殊要求，则出厂的接线盒方向统一朝上，具体如下：

1、The Wanshsin standard product has no junction box, if you want to order the gear reducer motor with junction box, a special interpretation and a diagram for junction box direction shall be attached.

2、Wanshsin can adjust the junction box in four directions of upward, downward, leftward and rightward according to customer's requirement. If the customer has no special requirement,the direction of the junction box shall be installed upward .The specifications are as follows:

## 普通减速箱接线盒方向 The direction of the junction box of the normal gear reducer

■ 接线盒朝上 Junction box facing upward

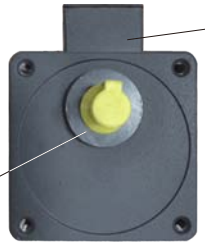


■ 接线盒朝右 Junction box facing right

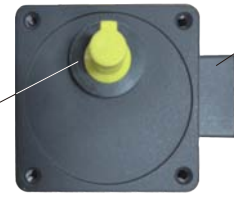


■ 接线盒朝下 Junction box facing downward

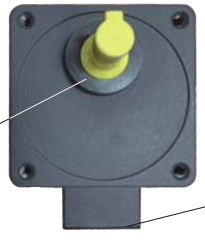


■ 接线盒朝左 Junction box facing left

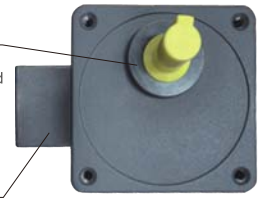


## 直角减速箱接线盒方向 Direction of the rectangle gear reducer junction box

■ 接线盒朝上 Junction box facing upward

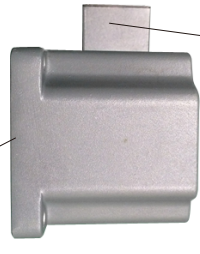


■ 接线盒朝右 Junction box facing right

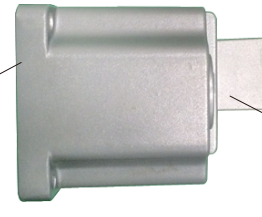


■ 接线盒朝下 Junction box facing downward

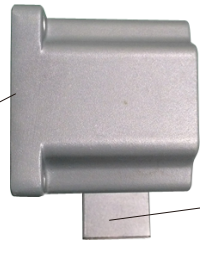


■ 接线盒朝左 Junction box facing left

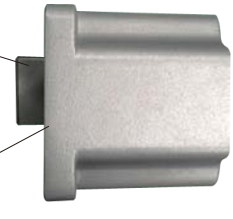

# 技术应用（说明及安装）

## TECHNICAL APPLICATION (Description and installation)

## 电机 MOTOR

### 1 特点 Features

电机作为本产品系列相对独立的一部分，共有六个品种，十个系列供用户选择。按品种分：标准电机、阻尼电机、调速电机、电磁制动电机、调速电磁制动电机、直流电机。按功率分：6W、15W、25W、40W、60W、90W、120W、140W、200W、250W。按使用电压分：单相110V/220V、三相220V/380V。该电机可配独立的接线端子盒，以方便电气连接。由于该产品系列为精密小型动力机械，外观精巧、尺寸精准。在装配使用中严禁过度敲击以防造成内部结构损坏，同时在选型过程中注意对输出轴的轴向、径向载荷也有要求，为保证使用寿命，请谨慎选型，合理使用。

As a relatively independent part of this product series, the motor has six varieties and ten series for your option: by varieties: standard, damping, variable speed, electromagnetic brake, variable speed electromagnetic brake and DC motors; by power: 6W, 15W, 25W, 40W, 60W, 90W, 120W, 140W, 200W, and 250W; by operating voltage: single phase 110V/220V, and three phase 220V/380V. The motor can match the terminal box of independence for easy electrical connection. Since the product line is precision small power machine and has sophisticated appearance and accurate size, it is strictly prohibited to impact excessively in the assembly to avoid causing damage to the internal structure; in the selection process,also pay attention to the axial and radial load of the output bearing. To ensure the life, please select carefully and use reasonably.

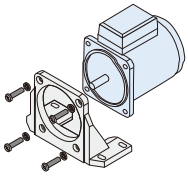

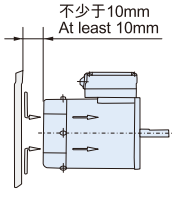


### 2 安装 Installation

对于输出轴为圆轴的独立电机，其轴端零件安装联接孔尺寸公差因型号不同分别为6H7，8H7，10H7，12H7。转配中除因设计结构外，推荐使用相对应规格的弹性联轴器。在端面安装有困难的场合，推荐使用相对应规格的直角安装脚，另外，对有冷却风扇的电机在安装时注意不要堵塞电机后部的吸风口，建议留出不少于10mm的空间。

For an independent motor with circular output bearing, the tolerance of connecting hole size for bearing component installation are 6H7, 8H7, 10H7 and 12H7 respectively depending on the models. Except for the reason of design structure, it is recommended to use flexible coupler of corresponding specifications for assembly. If it is difficult to install the end face, it is recommended to use right-angle mounting feet of corresponding specifications. In addition, do not to clog the suction opening in the rear side for the motors with cooling fans. It is recommended to leave a space not less than 10mm.

## 标准减速箱与电机的组合 Combination of standard gearbox and motor

### 1 特点 Features

电机通过端面定位环与标准减速箱精密定位，可提供标减速比1/3~1/200组合形式；在这系列减速比换变的前提下，若在选择不同功能的电机，即可实现变化更为丰富的实用组合. 例如：调速、电磁制动等形式.

The motor positions accurately through end face retaining ring and standard gearbox, and can provide standard reduction ratio of 1/3~1/200; when this series of reduction ratio change, you can select motors of different functions to achieve practical combinations with richer changes. For example: variable speed, electromagnetic brake,and so on.

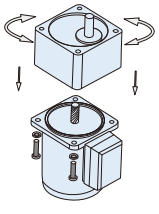

### 2 特点 Installation

标准减速箱、电机，同为精密机械。在设计选型后的安装过程，就成为决定使用寿命的关系因素之一。

Standard gearbox and motor are precision machinery. During installation after design and selection, it is one of the factors that determine the life.

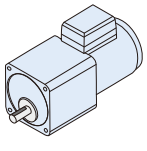

带中间减速箱
With intermediate gearbox

### 3 电机与标准减速箱的连接
Connection of the motor and standard gearbox

作为精密机械的装配，与减速箱配套的电机，在其连接端面均有凸缘止口。而减速箱的连结端面有与之配合的沉台止口。用户可跟据自己的实际情况调整减速箱与电机的装配相位，也就是说，可按图示任意旋转电机或减速箱。调速到理想位置后，在紧固电机法兰上的四个螺钉，注意紧固螺钉的顺序，通过对角依次逐渐紧固，方可使电机与减速箱体紧密贴合。

For the assembly of precision machinery, the motor used together with the gearbox has flange spigot in its connecting end. The connecting end of gearbox has a mating spigot. The user can adjust the assembly position of the gearbox and motor according to the actual situation, that is, the motor and gearbox can be rotated freely as shown. Adjust to the desired position, and then secure the four screws on the motor flange. Note the order of the fastening screws,tighten diagonall in turn and then fit the motor and gearbox closely.

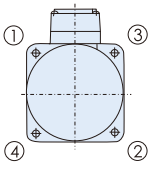


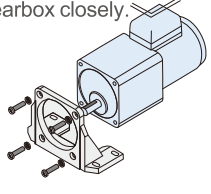

与直角安装脚组合
Combination with right-angle mounting feet

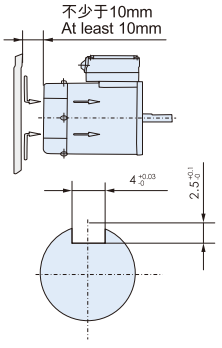


安装预留空间
Reserved space for installation

## 4 与设备的连接 Connection with the equipment

减速箱输出轴端的连接面为平面，其上的连接孔为螺纹孔，该面是经过精加工的平面，可与设备已加工的连接面直接连接。注意在紧定时仍应按对角依次逐渐紧固的方式。或设备连接受限，或设计结构差异，推荐使用专门配置的直角安装脚进行安装，这样更便于可靠连结，方便调速，同时也有与此配套的高精度弹性联轴器可供选择。

同样，对有冷却风扇的电机在安装时注意不要堵塞电机后部的吸风口，建议留出不少于10mm的空间。

本产品系列的电机、减速箱、中间减速箱均为紧密传动部件，在与负载连接时应格外注意，严禁猛烈敲击、扳扭。为便于装配在产品的设计生涯中已兼顾此类问题，下面是键槽宽度为4mm时的尺寸，轴外径公差等级均为h7。

The connecting surface of gearbox output bearing is flat, and the connecting holes on the surface are threaded. The surface is fine finished and can be directly connected to the processed connecting surface of the equipment. Note that it also should be tightened diagonally in turn. If limited by equipment connection or design structure difference, it is recommended to install with specially configured right angle mounting feet, which is more reliable and easy to connect, easy to regulate speed, and high precision flexible couplers are available.

Similarly, do not to clog the suction opening in the rear side for the motors with cooling fans. It is recommended to leave a space not less than 10mm.

The motor, gearbox and intermediate gearbox of this product series are close transmission components, and it is prohibited to impact or twist violently when connecting to the load. To faciitate assembly,these problems have been considered in product design. The keyway width is 4mm,and the outer diameter tolerance of the bearing is h7.

# 直角减速箱与电机的组合 Combination of right-angle gearbox and motor

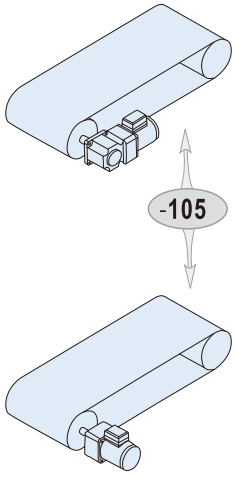


安装空间比较
Comparison of installation space

## 1 特点 Features

与传统的标准减速箱（或称平行轴减速箱）不同，为了给设计者提供更大的选择空间，使设备整体更加紧凑，本公司还提供了直角减速箱的传动形式。直角减速箱除具有标准减速箱的所有功能外，也就是宽范围的速比选择性(i=3~600)，优异的传递性能，还具有高强度的壳体，以及紧凑的安装形式，这是标准减速箱所不有及的。
同样，在前述条件下，通过选择不同功能的电机，能实现不同的功能组合。
例如：调速、电磁制动、可逆等等。

Different from traditional standard gearboxes (or parallel shaft gearboxes), in order to give designers greater choice and make the equipment more compact, we also offer right angle gearboxes. In addition to all the features of standard gearboxes, i.e. wide range of speed ratio selectivity (i=3~600)and excellent transfer properties, the right-angle gearboxes also have high strength casing and compact installation, which the standard gearboxes do not have.

Similarly, under the aforementioned conditions, you can achieve different combinations of features by selecting motors of different functions.

For example : variable speed , electromagnetic brake, reversible , and so on.

## 4 与设备的连接 Connection with the equipment

直角减速箱输出轴的端面为精加工平面，其上四角分布地四个通孔，可与设备已加工的连接面直接贴合连接，在直角减速箱的输出方式分为中实轴与中空轴两种形式工，用户可根据负载的形式选择，紧固螺栓时，同样应采用对角依次逐渐紧固地方式。

The end surface of right angle gearbox output bearing is finished plane. The four through holes distributed in the four corners can fit the processed connection surface of the equipment directly. The output of right angle gearbox includes solid axis and hollow axis forms. The user can select according to the load form. The bolts also should be fastened diagonally in turn.

## 2 特点 Installation

直角减速箱、中间减速箱和电机属紧密机枪。在设计选型后的装配质量将会直接影响其使用寿命以及性能。

Right angle gearbox, intermediate gearbox and motor are precision machinery. The assembly quality after design and selection will directly affect the service life and performance.

## 3 电机与标准减速箱的连接 Connection of the motor and the right angle gearbox

作为紧密机的装配，与直角减速箱配套的电机除有独立的连线端子盒外，在其连接端面均有凸缘止口。而直角减速箱输入端面有与之配合的沉孔台止口。用户可根据实际情况，适当地旋转电机与直角减速箱的相对旋向。调整到位后，在坚定电机到连接法兰上的四个螺钉。
注意紧固螺钉的顺序：对角依次逐渐紧固。

For the assembly of precision machinery, in addition to independent connection terminal box, the motor used together with the right angle gearbox has flange spigot in its connecting end. The connecting end of the right angle gearbox has a mating spigot. The user can rotate the relative rotation of the motor and the right angle gearbox appropriately according to the actual situation. Adjust to the desired position, and then secure the four screws on the motor flange.

Note the order of screw tightening: tighten diagonally in turn.

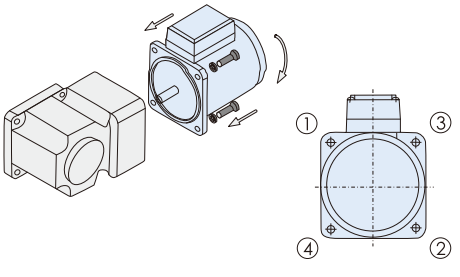

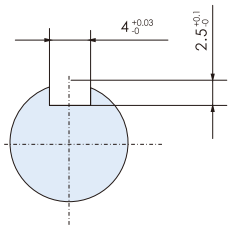


## 5 直角减速箱中实轴输出的连接
Connection with solid axis output of right angle gearbox

直角减速箱中实轴输出为键槽结构形式，对应不同规格，与其输出轴装配孔的尺寸分别为；12H7， 15H7，20H7三种。在与负载的连接中，严禁猛烈敲击、扳扭，在确保装配质量的前提下，该产品在设计生产中也兼顾了有关装配的因素。如图所示为键宽4mm尺寸公差。

The solid axis output of right angle gearbox is in keyway structure. Corresponding to different specifications, the sizes of the output bearing mounting holes are 12H7, 15H7 and 20H7 respectively. In connection with the load, do not knock or twist violently. Under the premise of ensuring the assembly quality, other assembly factors are also considered in product design and production. The figure shows 4mm key width dimensional tolerance.

## 7 电机，减速箱的转配注意事项
Precautions for motor and gearbox assembly

电机、减速箱以及中间减速箱同为紧密机械。在实际应用中，因装配不当而造成损失或报废的情况尤为突出，所以装配环节也是影响正常使用的因素之一。

Motor, gearbox and intermediate gearbox are precision machinery. In practice, damage and scrapping are often caused by improper assembly, so that the assembly is also one of the factors affecting the normal use.

**●轴、键公差 Shaft and key tolerance**

为便于转配，同时保证可靠的连接，以及转矩传递。产品对所涉及到的键槽公差在现有的规格中，均有一般通用设备略大（具体公差详见样本），输出轴类公差为H7, 孔类H8。

To facilitate the assembly and ensure reliable connection and torque transmission, the related keyway tolerances are generally slightly larger than generic devices (see sample for specific tolerance), the tolerance of output bearings is H7,and the tolerance of holes is H8.

**●敲击问题 Percussion problem**

转配中严禁对负载轴、套进行压力转配，这将容易导致电机或减速箱体中轴承或齿轮的损坏，也会三十齿轮的齿合印痕。同时也要避免猛烈敲击，以及扳扭。严格控制负载轴、套的尺寸公差，必要时可用软质材料衬垫，轻微敲击。

It is prohibited to transfer the pressure of load axis and sleeve in the assembly process, or else it will easily lead to damage to the bearings or gears in the motor or gearbox and ratcheting prints on the gear teeth. Also avoid violent knock and twist. Control the dimensional tolerance of the load axis and sleeve strictly; if necessary, pad soft liner material and knock softly.

**●同心度问题 Concentricity problem**

由于输出均为回转形式，在调速，重载工况下，同心度尤为重要。推荐选用本公司配套生产的弹性联轴器，它不仅回转惯量小，结构紧凑，而且具备同心度补偿和传递转矩。

Since the output is in rotating form, concentricity is particularly important in variable speed and heavy-duty condition. It is recommended to use the flexible couplers of our company, which not only have small rotary inertia and compact structure, but also compensate concentricity and transmit torque.

## 6 直角减速箱中空轴输出的连接
Connection with hollow axis output of right angle gearbox

在中空系列的直角减速箱装配中，同样注意严禁猛烈敲击，扳扭。与中空轴连接的轴尺寸差为h8,分别有：15h8, 17h8, 22h8三种。为使与负载连接时有可靠合理的轴向定位，在直角减速箱中空系列中还设置了轴向固定结构。推荐的安装方式如图所示：

In the assembly of hollow series right angle gearboxes, it is also prohibited to knock or twist violently. The dimensional tolerance of the axis connected to the hollow axis is h8, including 15h8, 17h8 and 22h8. To ensure reasonable and reliable axial positioning in load connection, the hollow series right angle gearboxes also integrate axially fixed structure. The recommended installation is shown in the figure:

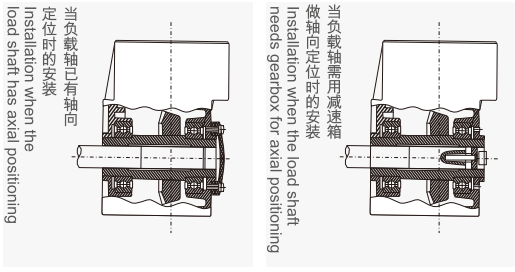


**●特别注意 Special Note**

1、用直角中空减速箱做轴向定位时，不允许负载轴有过定位的现象，否则将易损坏减速箱。

2、直角中空减速箱配轴长度技术要求：
- 若此轴是完全利用中空轴支撑固定，则轴长应与中空轴等长或略短一点。
- 若无支撑作用,仅传递转矩，则轴仅需插入中空轴1/3深即可。

1、For axial positioning with the right angle hollow gearbox, over-positioning isn't allowed for the load axis, or else it will easily damage the gearbox.

2、Technical requirements on axis length of rightangle hollow gearbox:
- If this axis is fully supported and fixed by hollow axis, the axial length should be equal to or slightly shorter than the hollow axis.
- If there is no supporting effect and only the torque is transferred, the axis only needs to be inserted 1/3 depth of the hollow axis.

**●轴向固定步骤 Steps of axial fixation**

1、取下直角减速箱中空轴另一侧的防尘盖；

2、如图所示，对不同结构的负载轴按图示方法固定：

3、安装后部防尘盖（注意：螺栓高度不得超过后端盖面2mm）；

4、若无法安装防尘盖，则必须用M4×5螺钉将原防尘盖螺钉孔堵住，否则会漏油，同时螺钉勿超长，否则将顶坏内部轴承。

1、Remove the dust cover on the other side of the hollow axis of the right angle gearbox;

2、As shown in the figure, fix the load axis of different structures in the method shown:

3、Install the rear dust cover (Note: Bolt height shall not exceed 2mm of the rear cap);

4、If the dust cover can't be installed, you must block the screw holes of the dust cover with M4×5 screws, or else it will leak oil; the screws shouldn't be too long, or else it will damage the internal bearings.

致力于打造世界一流的中国传动品牌

Committed To Building A World-class
Transmission Brand

# AEW AUTOMATION SYSTEMS SOLUTIONS

(PG0466625-D)

WANSHSIN®
萬鑫精工

致力于打造世界一流的中国传动品牌




经销商
Distributor

**AEW AUTOMATION SYSTEMS SOLUTIONS**

(PG0466625-D)

10, Lorong Alma Jaya 38,
Pusat Perniagaan Alma Jaya,
14000 Bukit Mertajam, Penang, Malaysia.
H/P: 012-499 7466 Tel/ Fax: 04-551 6566

E-mail: sales@aewautomation.com
Website: www.aewautomation.com