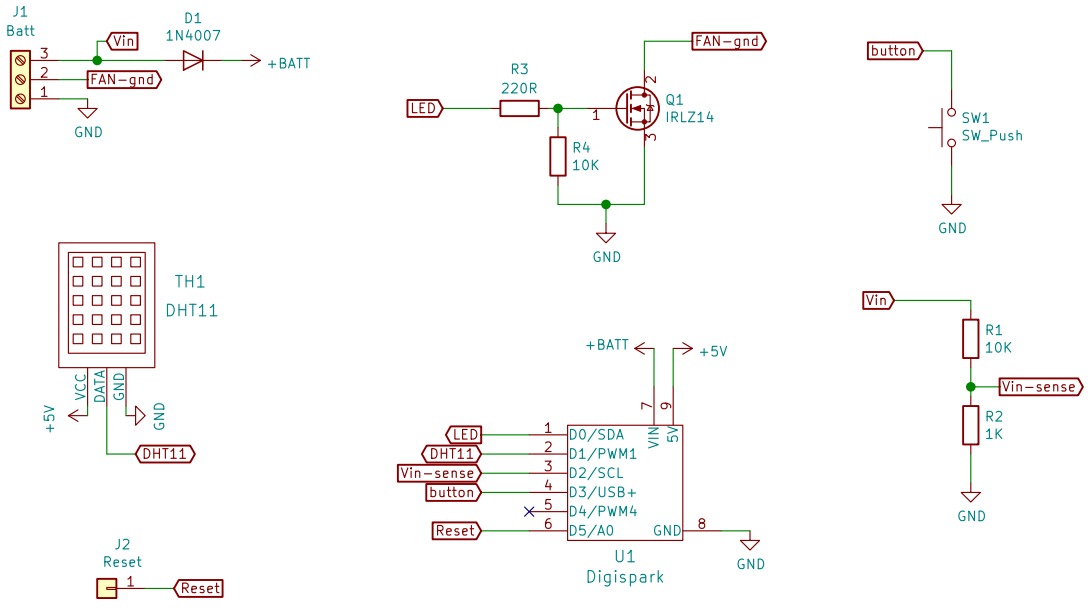

H1
MountingHole

H2
MountingHole

Owen Carter

Sheet: /

File: BoatFanControl.sch

Title: DigiSpark Fan Controller for Boats

Size: User	Date: 2019-08-29	**Rev: 1.0**
KiCad E.D.A. kicad 5.1.4-1.fc30		Id: 1/1