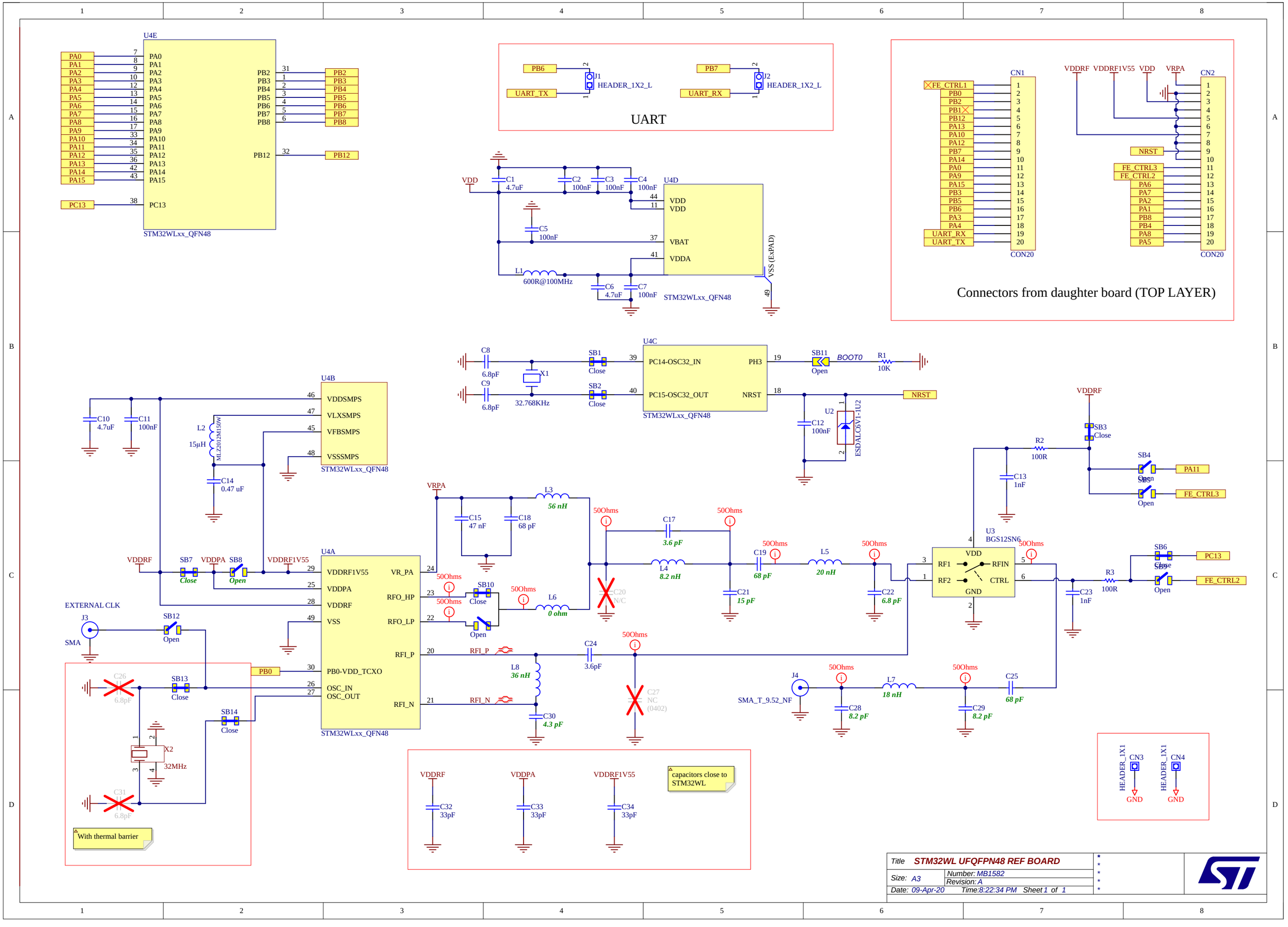
U4E
STM32WLxx_QFN48
UART
PB6
PB7
UART_TX
UART_RX
J1
J2
HEADER_1X2_L
U4D
VDD
VBAT
VDDA
VSS (EXPAD)
L1
600R@100MHz
C1 4.7uF
C2 100nF
C3 100nF
C4 100nF
C5 100nF
C6 4.7uF
C7 100nF
Connectors from daughter board (TOP LAYER)
CN1
CN2
CON20
FE_CTRL1
FE_CTRL2
FE_CTRL3
NRST
VDDRF
VDDRF1V55
VRPA
U4C
PC14-OSC32_IN
PC15-OSC32_OUT
PH3
NRST
X1
32.768KHz
C8 6.8pF
C9 6.8pF
SB1 Close
SB2 Close
SB11 Open
BOOT0
R1 10K
C12 100nF
U2
ESDALC6V1-1U2
U4B
VDDSMPS
VLXSMPS
VFBSMPS
VSSSMPS
C10 4.7uF
C11 100nF
L2 15µH
MLZ2012M150W
C14 0.47 uF
SB3 Close
R2 100R
C13 1nF
SB4 Open
SB5 Open
PA11
FE_CTRL3
U4A
VDDRF1V55
VDDPA
VDDRF
VSS
VR_PA
RFO_HP
RFO_LP
RFI_P
RFI_N
PB0-VDD_TCXO
OSC_IN
OSC_OUT
PB0
SB7 Close
SB8 Open
SB10 Close
Open
C15 47 nF
C18 68 pF
L3 56 nH
L6 0 ohm
50Ohms
C17 3.6 pF
L4 8.2 nH
C19 68 pF
L5 20 nH
C20 N/C
C21 15 pF
C22 6.8 pF
U3 BGS12SN6
VDD
RF1
RF2
RFIN
CTRL
GND
R3 100R
C23 1nF
SB6 Close
Open
PC13
FE_CTRL2
EXTERNAL CLK
J3
SMA
SB12 Open
C26 6.8pF
SB13 Close
SB14 Close
X2 32MHz
C31 6.8pF
With thermal barrier
L8 36 nH
C24 3.6pF
C30 4.3 pF
C27 NC (0402)
J4
SMA_T_9.52_NF
C28 8.2 pF
L7 18 nH
C29 8.2 pF
C25 68 pF
C32 33pF
C33 33pF
C34 33pF
capacitors close to STM32WL
CN3
CN4
HEADER_1X1
GND
Title STM32WL UFQFPN48 REF BOARD
Size: A3
Number: MB1582
Revision: A
Date: 09-Apr-20
Time: 8:22:34 PM
Sheet 1 of 1