GLOBE VALVES-1500/2500-Welded Bonnet T-type - Socket Weld/ NPT-BW

Material of Construction

Body	:	ASTM A105 N, CF8, CF8M, 316/316L NACE, F11, F22, LF2
Bonnet	:	ASTM A105 N, CF8, CF8M, 316/316L NACE, F11, F22, LF2
Wedge	:	ASTM A105 N, CF8, CF8M, 316/316L NACE, F11, F22, LF2
Trim	:	ASTM A82 Gr. F6, 11, 12, 8, 5
Seat	:	HF Stellited
Gland Packing	:	Graphite Asbestos, INHIB, inconel wire rein
Bolt + Nut	:	B7/2H - B8/8 or B7/2H
Gasket	:	SPW SS304/316 with CAF/Grafoil

Ratings (ASTM A105)

1500 p.s.i. @ 850°F
3705 p.s.i. @ 100°F

Test pressure (ASTM A105)

Hydraulic: *(minimum)*
Body - 5575 p.s.i.
Seat - 4100 p.s.i.
Air under water:
Seat - 85 p.s.i.

Standards

Construction	BS 5352
Socket weld	ASME B16.11
Threaded	ASME B1.20.1
Butt weld	ASME B16.25
Test	BS 6755 (Pt.1)

Connections

SW	Socket weld	**B8**	Butt weld 80
TH	threaded NPT		
TS	Sw/NPT		
SE	Sw(e)/NPT		
SU	Sw(u)/NPT		
B6	Butt weld 160		

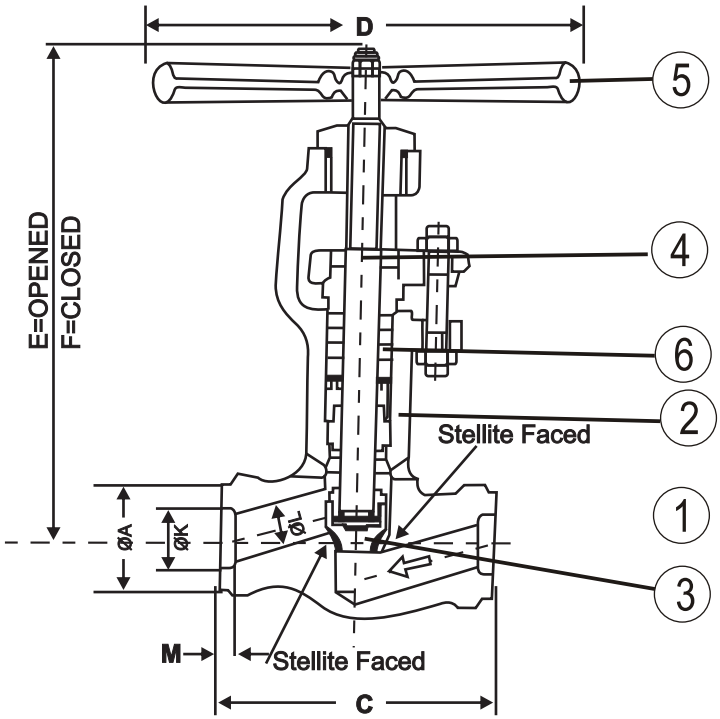

stem threaded

Class 2500 & 3000 Spl (Socket Weld End) **DIMENSIONS (mm)**

Valve mm	Size inch	A	C	D	E	F	K	L	M	Wt.(Kg)
15	½"	41.3	127.0	181	225	215	21.7	11.1	9.5	5.0
20	3/4"	50.0	127.0	206	286	270	27.1	14.3	12.7	9.0
25	1"	57.2	127.0	206	286	270	33.8	14.3	12.7	9.0