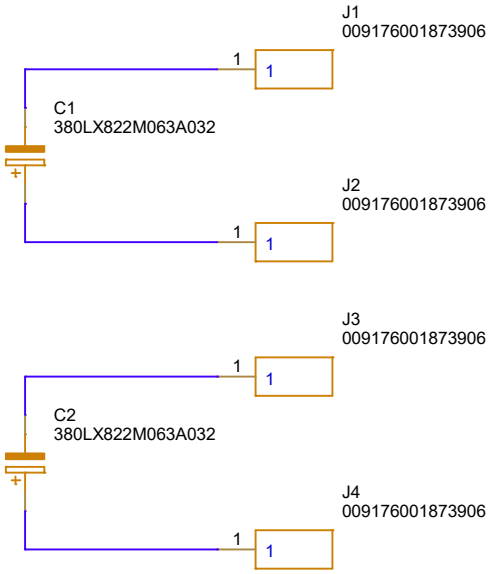

SBE Electronics / EBS		
Title Capacitor Board		
Size A4	Document Number 1	Rev 0
Date: Saturday, July 26, 2025	Sheet 1 of 1	