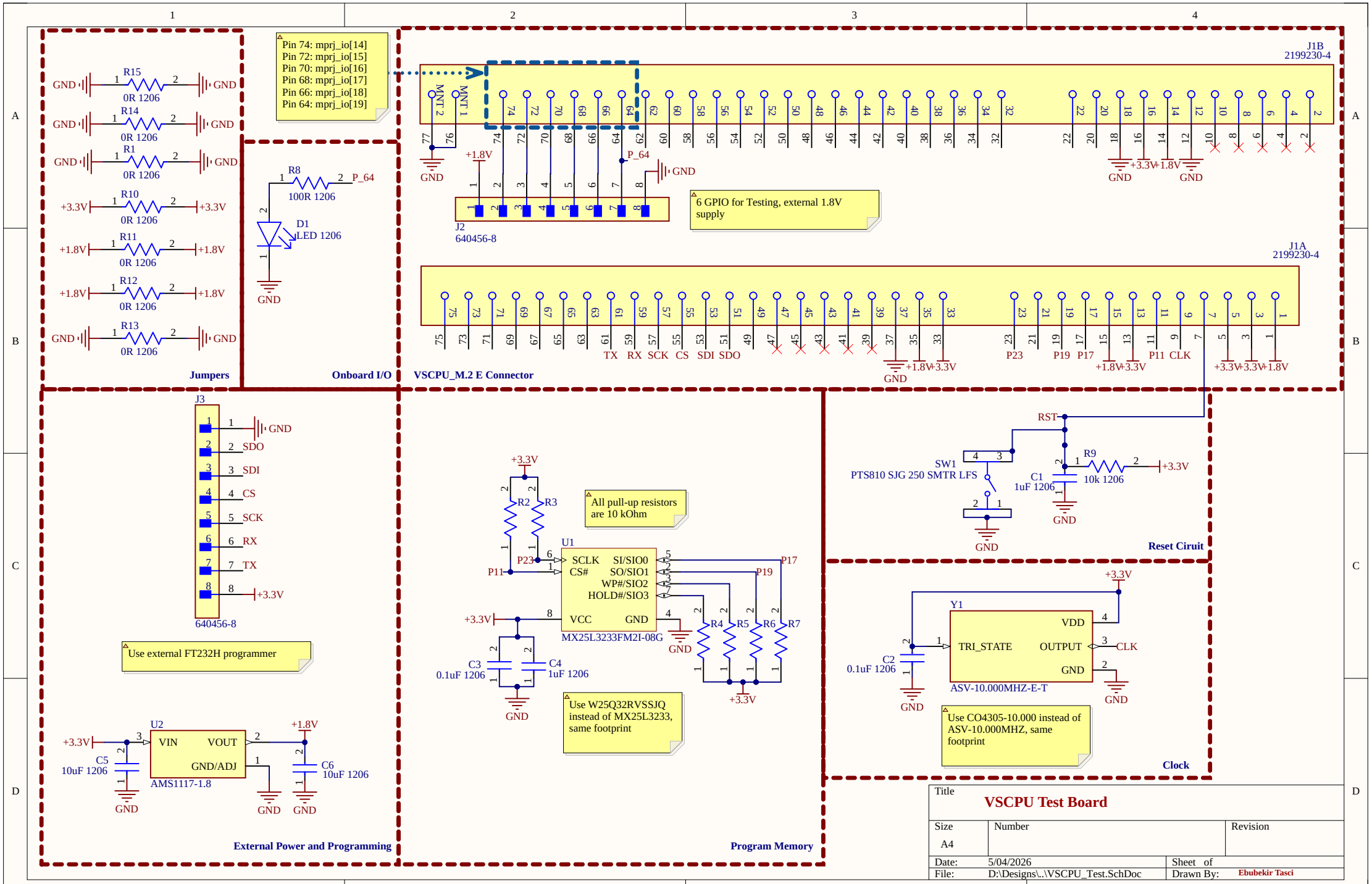
Pin 74: mprj_io[14]
Pin 72: mprj_io[15]
Pin 70: mprj_io[16]
Pin 68: mprj_io[17]
Pin 66: mprj_io[18]
Pin 64: mprj_io[19]
R15 0R 1206
R14 0R 1206
R1 0R 1206
R10 0R 1206
R11 0R 1206
R12 0R 1206
R13 0R 1206
Jumpers
R8 100R 1206
D1 LED 1206
Onboard I/O
J1B 2199230-4
J2 640456-8
6 GPIO for Testing, external 1.8V supply
J1A 2199230-4
TX RX SCK CS SDI SDO
P23 P19 P17 P11 CLK
VSCPU_M.2 E Connector
J3 640456-8
Use external FT232H programmer
U2 AMS1117-1.8
External Power and Programming
U1 MX25L3233FM2I-08G
All pull-up resistors are 10 kOhm
Use W25Q32RVSSJQ instead of MX25L3233, same footprint
Program Memory
SW1 PTS810 SJG 250 SMTR LFS
R9 10k 1206
C1 1uF 1206
Reset Ciruit
Y1 ASV-10.000MHZ-E-T
C2 0.1uF 1206
Use CO4305-10.000 instead of ASV-10.000MHZ, same footprint
Clock
Title
VSCPU Test Board
Size A4
Number
Revision
Date: 5/04/2026
Sheet of
File: D:\Designs\..\VSCPU_Test.SchDoc
Drawn By: Ebubekir Tasci

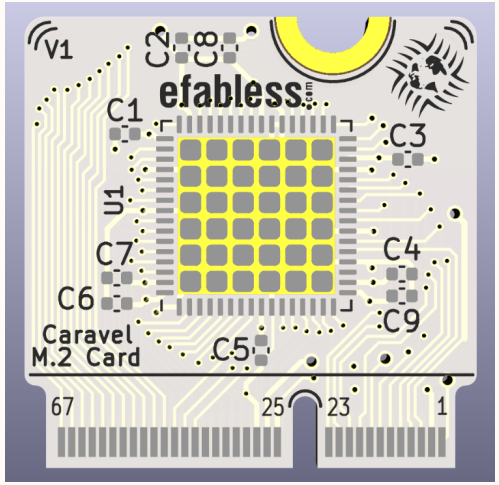

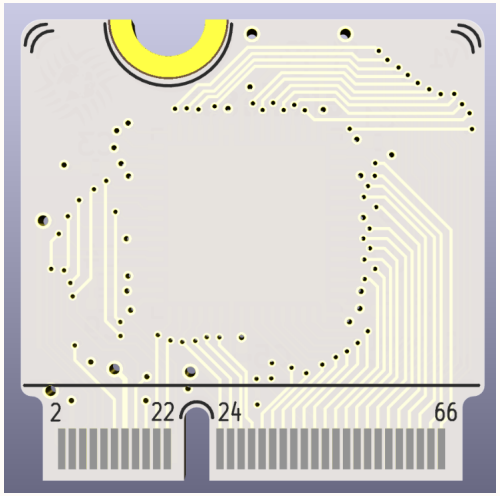

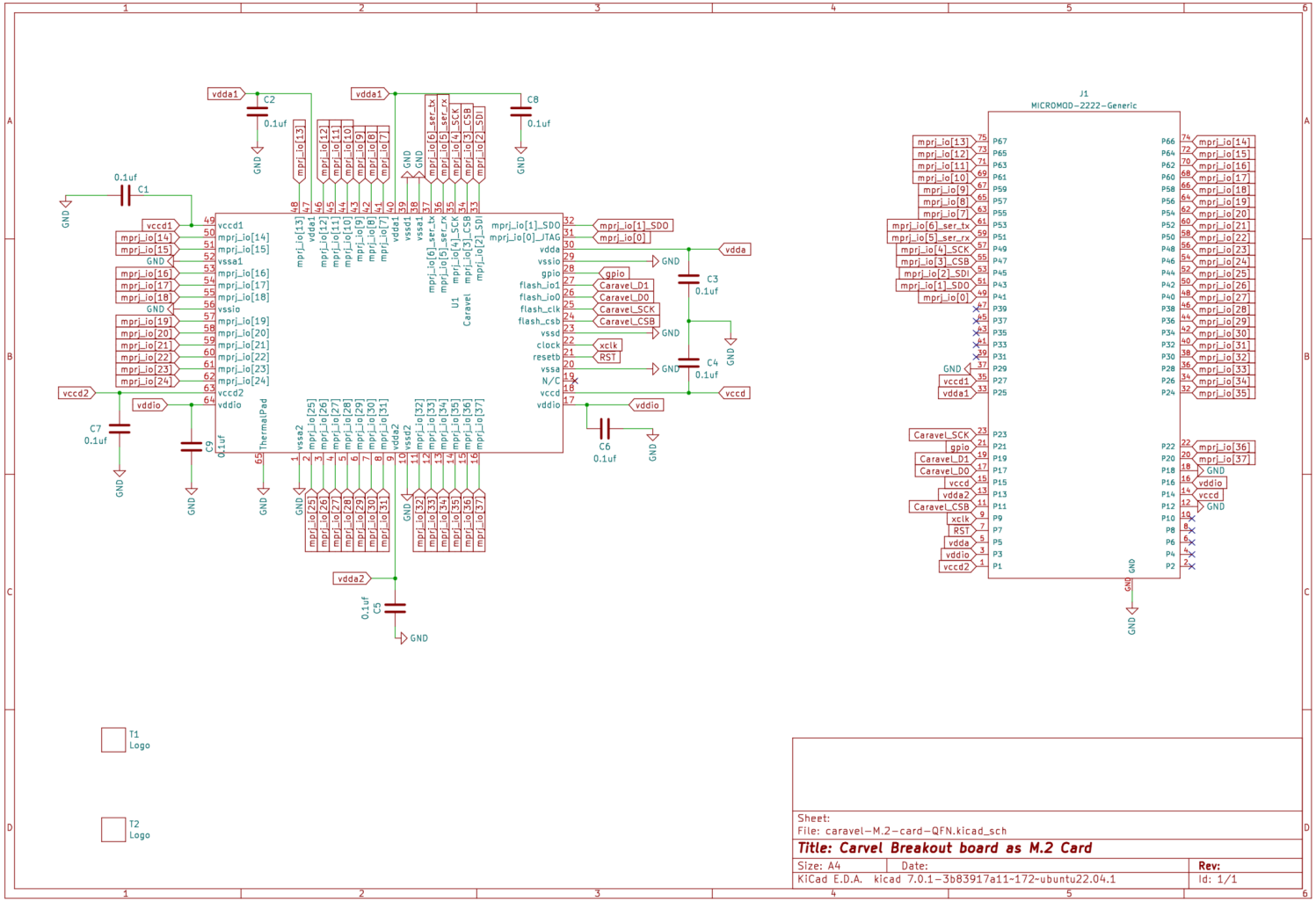

Title	VSCPU Test Board	
Size A4	Number	Revision
Date: 5/04/2026	Sheet of	
File: D:\Designs\..\Extra_Info.SchDoc	Drawn By: Ebubekir Tasci	

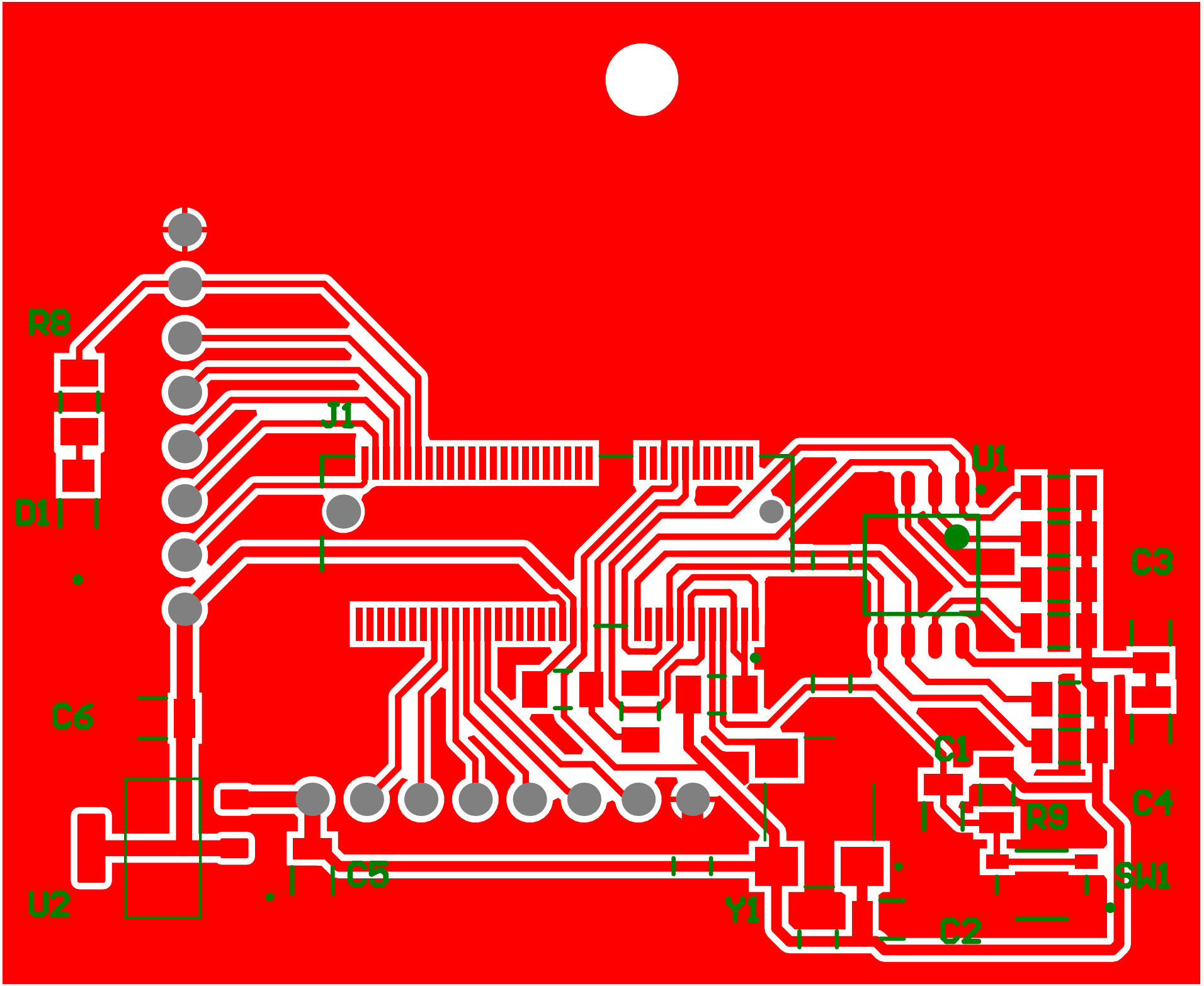
R8
J1
U1
D1
C3
C6
C1
C4
R9
C5
SW1
U2
Y1
C2