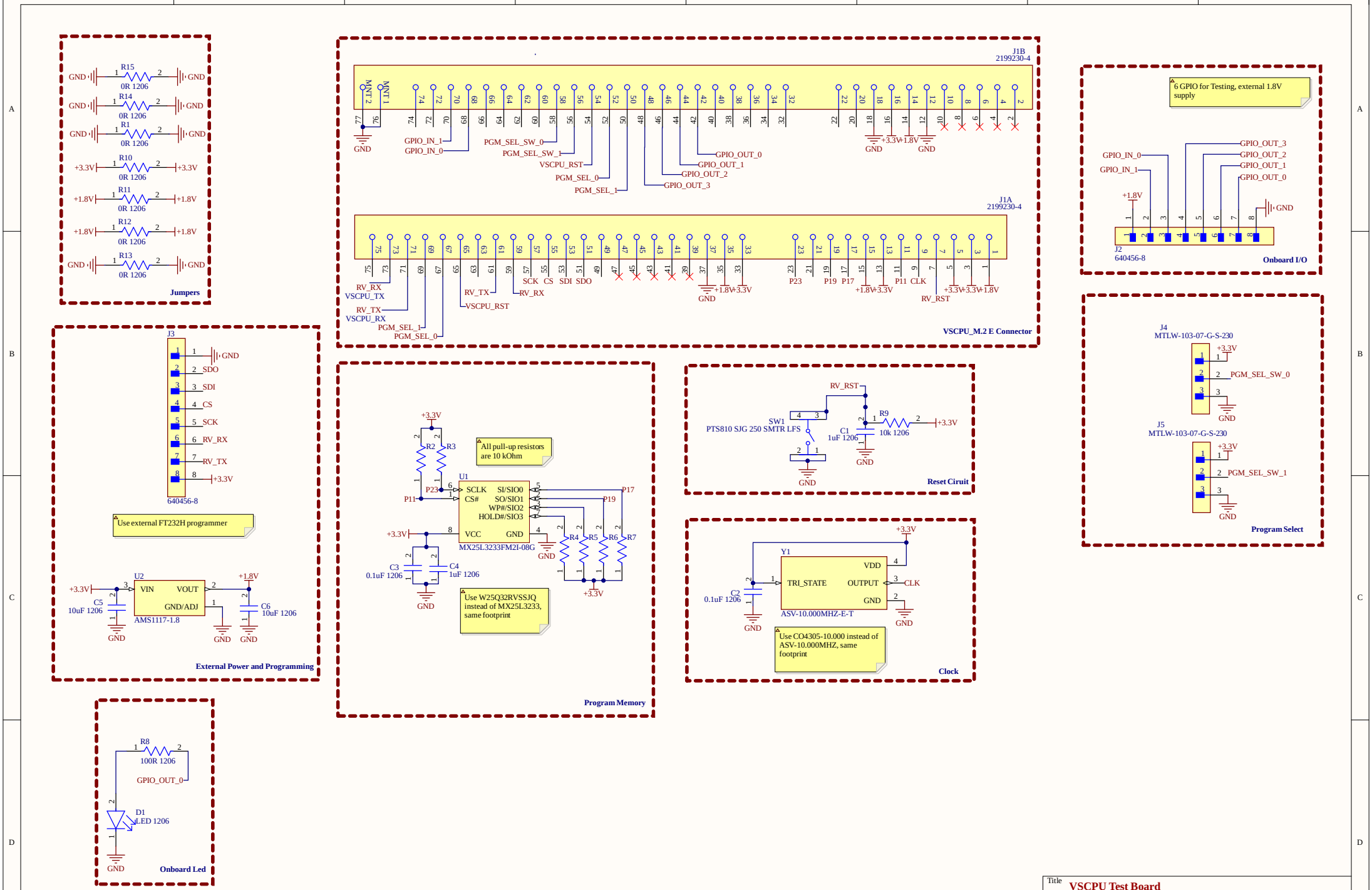
Jumpers
R15 0R 1206 GND GND
R14 0R 1206 GND GND
R1 0R 1206 GND GND
R10 0R 1206 +3.3V +3.3V
R11 0R 1206 +1.8V +1.8V
R12 0R 1206 +1.8V +1.8V
R13 0R 1206 GND GND
J1B 2199230-4
MNT2 MNT1 GND
GPIO_IN_1 GPIO_IN_0
PGM_SEL_SW_0 PGM_SEL_SW_1 VSCPU_RST PGM_SEL_0 PGM_SEL_1
GPIO_OUT_0 GPIO_OUT_1 GPIO_OUT_2 GPIO_OUT_3
GND +3.3V +1.8V GND
J1A 2199230-4
RV_RX VSCPU_TX RV_TX VSCPU_RX PGM_SEL_1 PGM_SEL_0
RV_TX VSCPU_RST RV_RX
SCK CS SDI SDO
GND +1.8V +3.3V
P23 P19 P17 +1.8V +3.3V P11 CLK RV_RST +3.3V +3.3V +1.8V
VSCPU_M.2 E Connector
6 GPIO for Testing, external 1.8V supply
GPIO_IN_0 GPIO_IN_1 +1.8V
GPIO_OUT_3 GPIO_OUT_2 GPIO_OUT_1 GPIO_OUT_0 GND
J2 640456-8
Onboard I/O
J3 640456-8
GND SDO SDI CS SCK RV_RX RV_TX +3.3V
Use external FT232H programmer
U2 AMS1117-1.8
+3.3V VIN VOUT GND/ADJ +1.8V
C5 10uF 1206 GND
C6 10uF 1206 GND GND
External Power and Programming
+3.3V R2 R3
All pull-up resistors are 10 kOhm
U1 MX25L3233FM2I-08G
SCLK CS# SI/SIO0 SO/SIO1 WP#/SIO2 HOLD#/SIO3 VCC GND
P23 P11 P17 P19
R4 R5 R6 R7 +3.3V
C3 0.1uF 1206 C4 1uF 1206 GND
Use W25Q32RVSSJQ instead of MX25L3233, same footprint
Program Memory
RV_RST
SW1 PTS810 SJG 250 SMTR LFS
C1 1uF 1206 GND
R9 10k 1206 +3.3V
Reset Ciruit
J4 MTLW-103-07-G-S-230
+3.3V PGM_SEL_SW_0 GND
J5 MTLW-103-07-G-S-230
+3.3V PGM_SEL_SW_1 GND
Program Select
+3.3V
Y1 ASV-10.000MHZ-E-T
VDD TRI_STATE OUTPUT GND CLK
C2 0.1uF 1206 GND
Use CO4305-10.000 instead of ASV-10.000MHZ, same footprint
Clock
R8 100R 1206 GPIO_OUT_0
D1 LED 1206 GND
Onboard Led
Title VSCPU Test Board
Size A3
Number
Revision
Date: 5/13/2026
Sheet of
File: D:\Designs\..\VSCPU_Test.SchDoc
Drawn By: Elnubekir Tasci and Salih Aydogdu

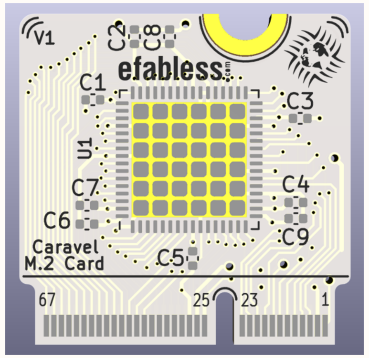

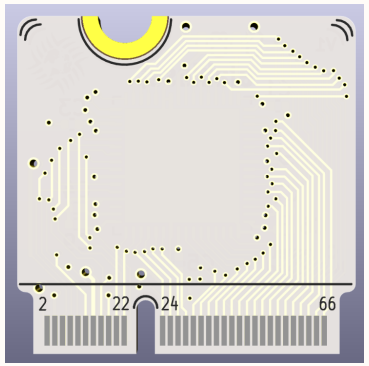

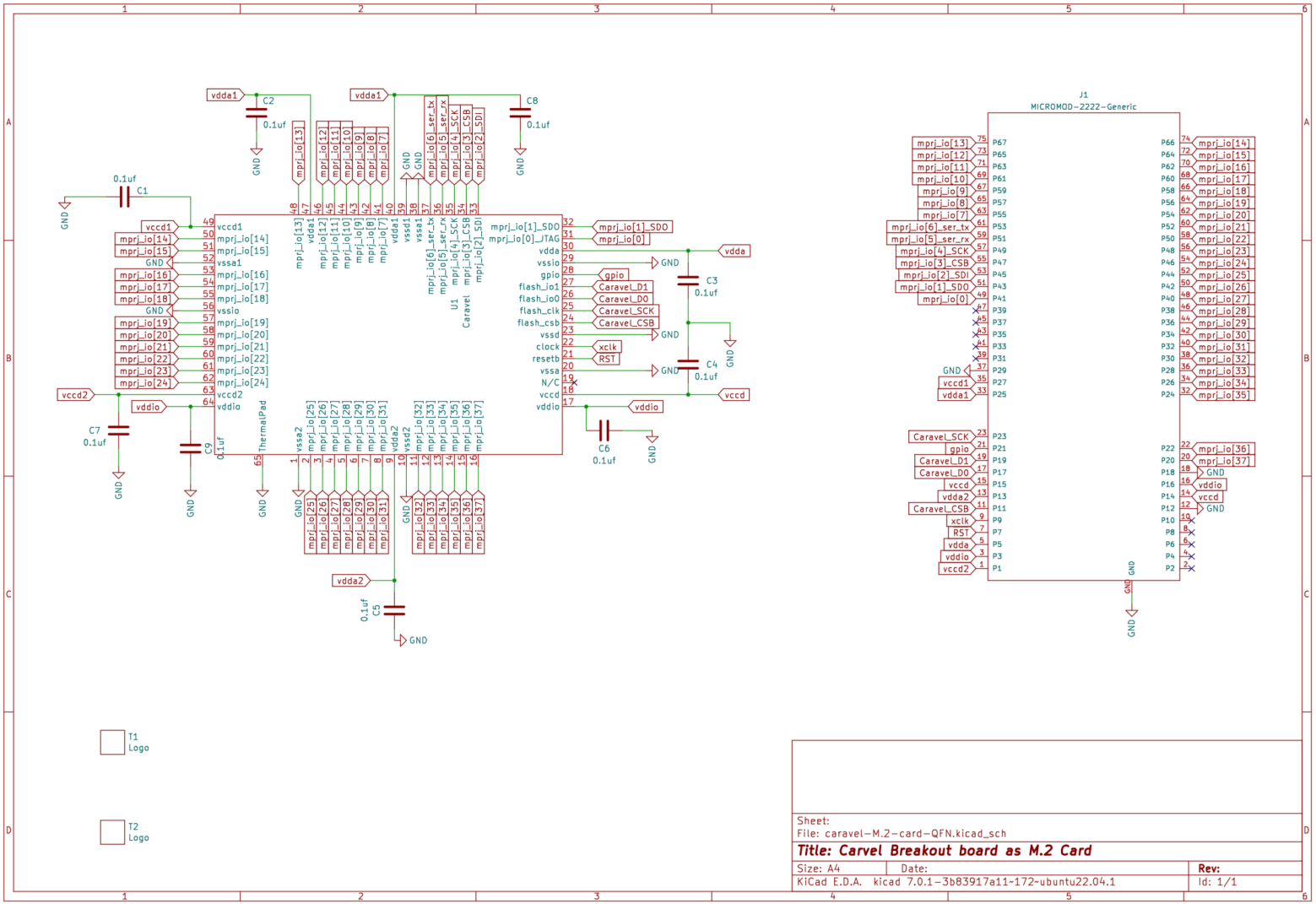

Title	**Caravel Board Pins**	
Size A3	Number	Revision
Date: 5/13/2026	Sheet of	
File: D:\Designs\..\Extra_Info.SchDoc	Drawn By:	

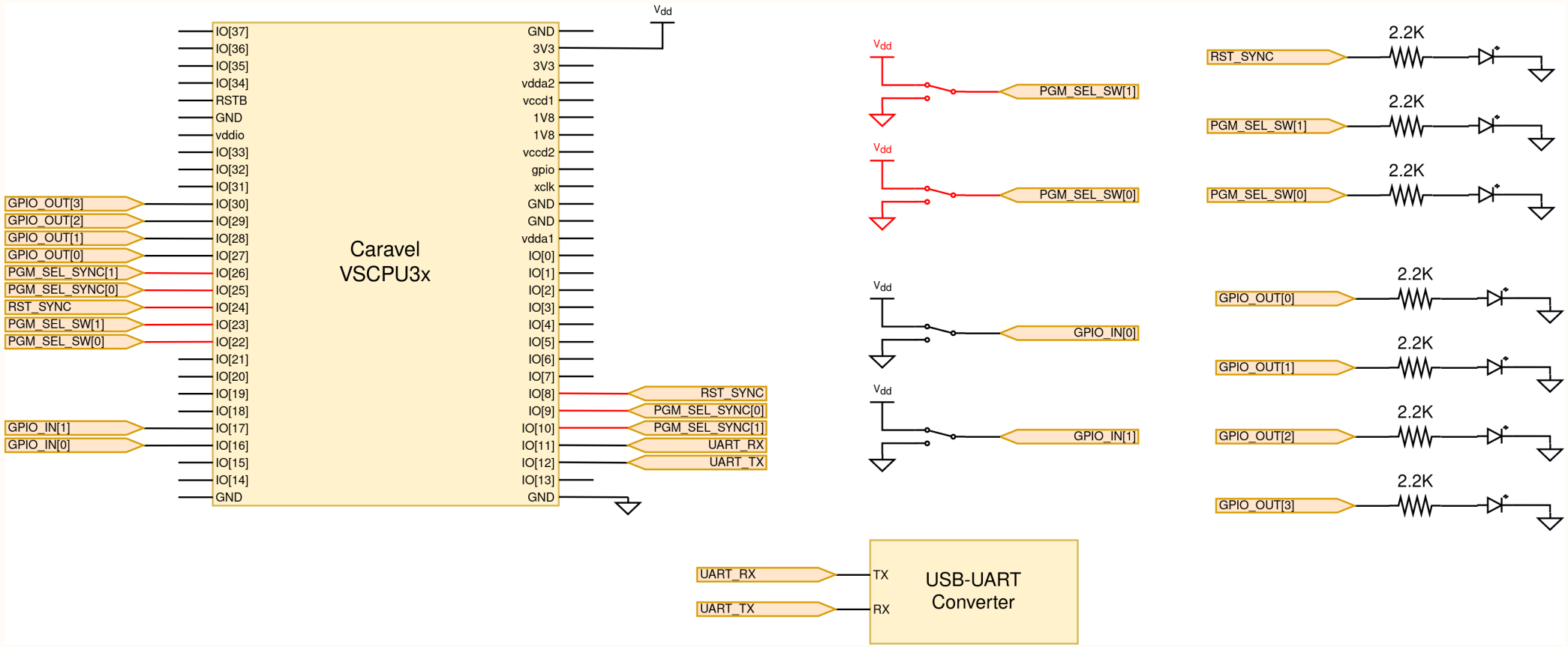

Title	Reference Design	
Size A3	Number	Revision
Date: 5/13/2026	Sheet of	
File: D:\Designs\..\Reference_Design.SchDoc	Drawn By:	