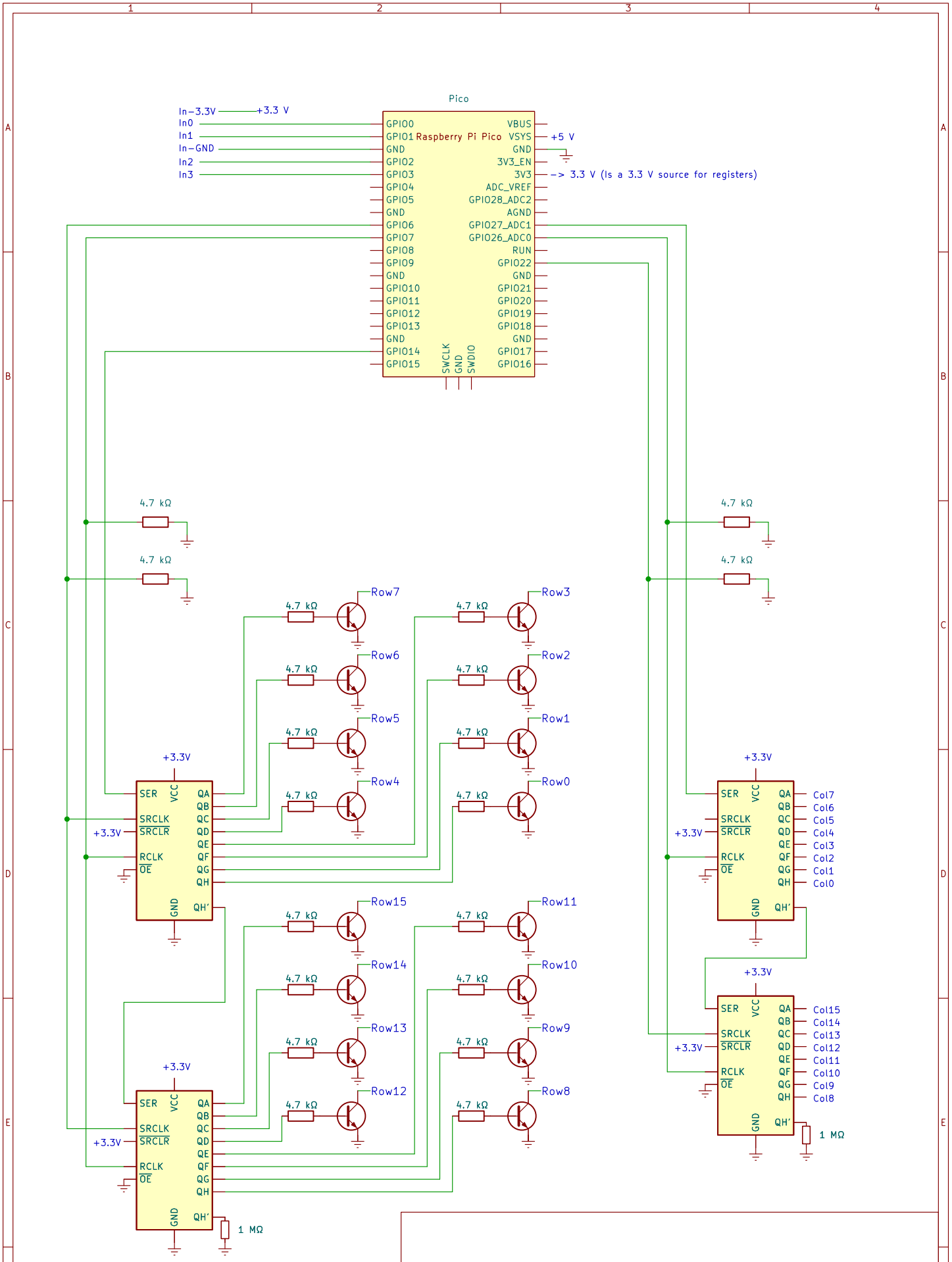

Sheet: /
File: control-unit.kicad_sch

Title: "led-matrix" project schematic, page 1/4

Size: A4	Date: 28.08.2022	Rev:
KiCad E.D.A. eeschema (6.0.7)		Id: 1/1