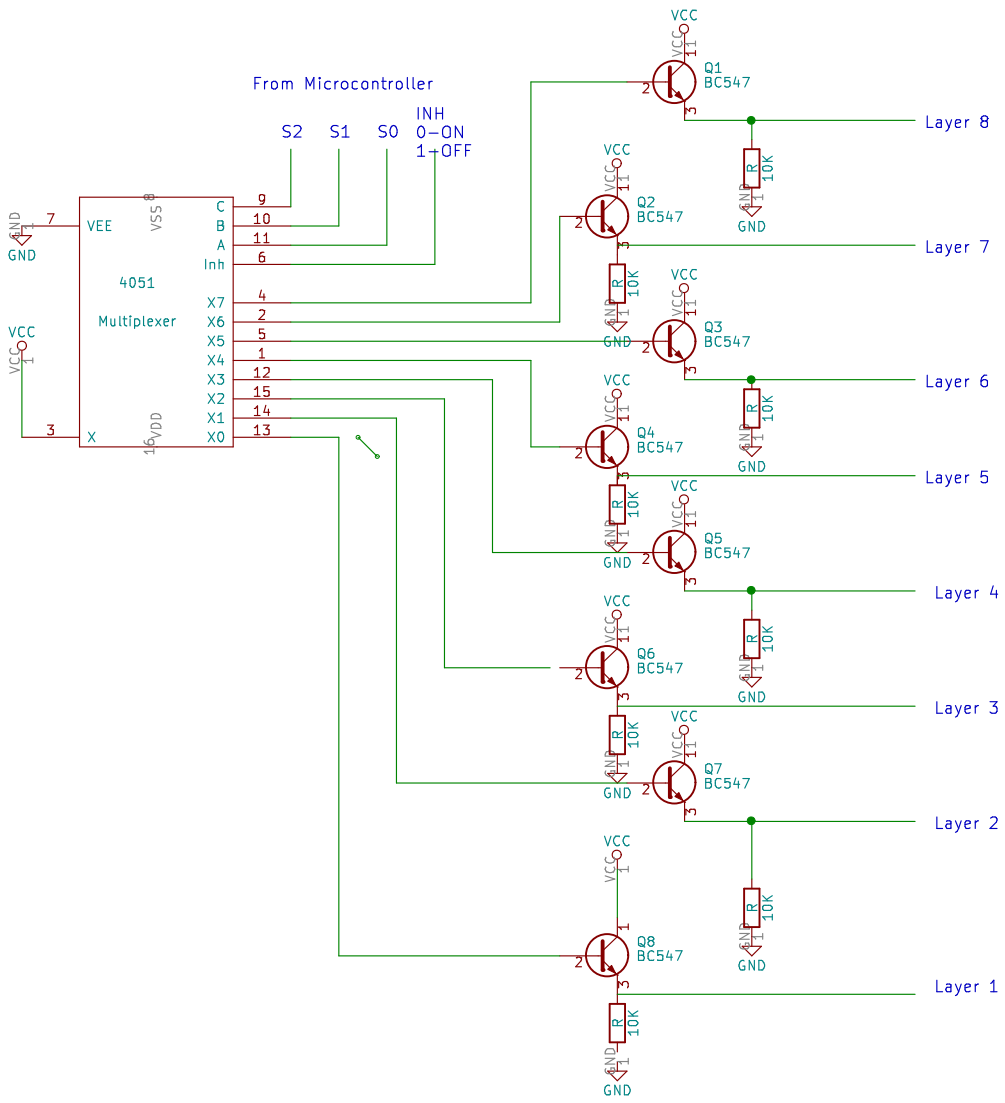

Ashok Kumar Chaudhary

Sheet: /
File: switch.sch

Multiplexer 1

Title:

Size: A4 | Date: | **Rev:**

KiCad E.D.A. kicad 4.0.7-e2-637661ubuntu18.04.1 | Id: 1/1