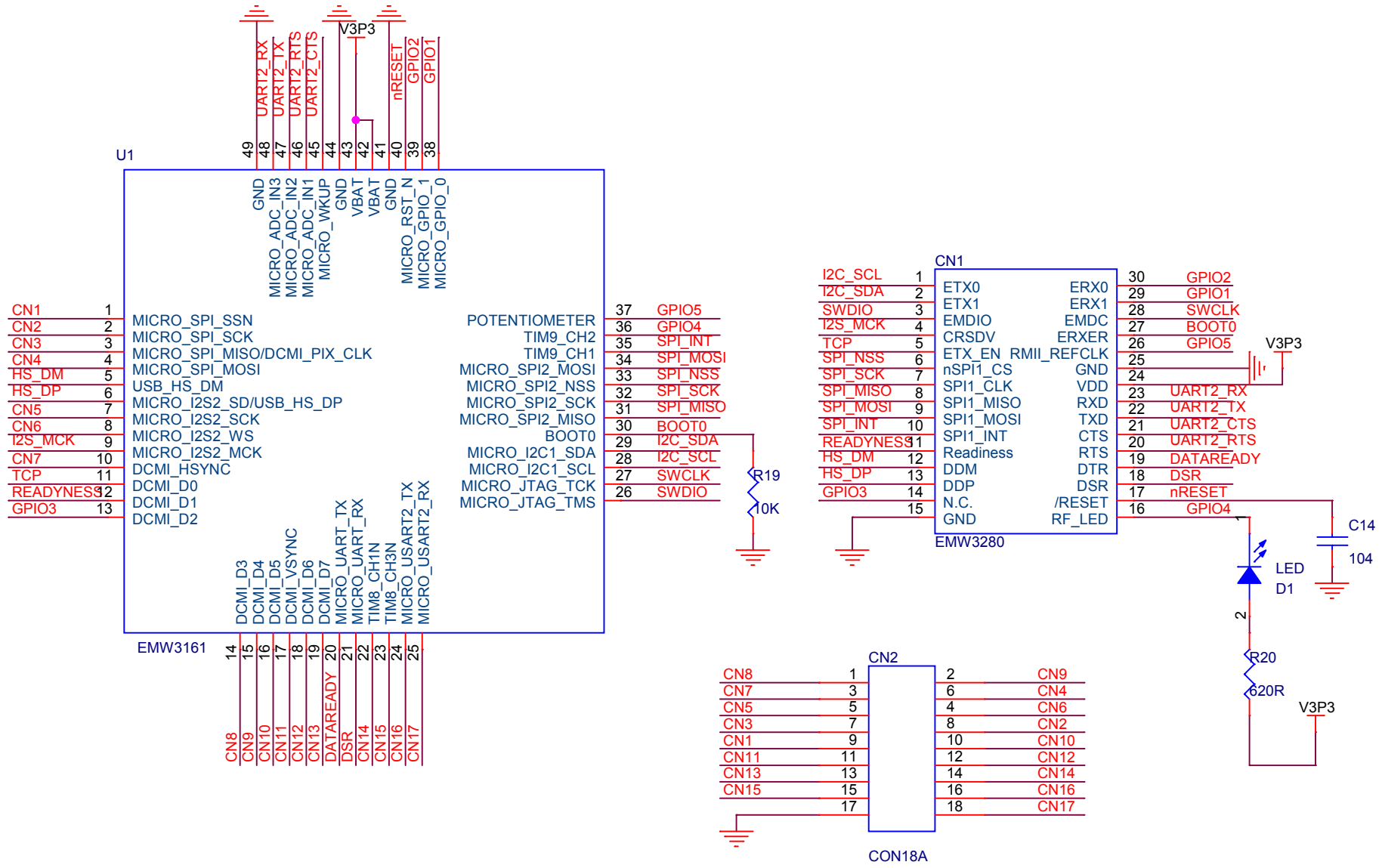

Title	<Title>	
Size A	Document Number <Doc>	Rev <RevCode>
Date: Tuesday, September 10, 2013	Sheet 1 of 1	