AN<10447_1>

PN532 demoboard

Rev. <1.0> 13.07.2007 Application note

Document information

Info	Content
Keywords	PN532, NFC, demoboard
Abstract	This document describes PN532 demoboard.

PUBLIC

PHILIPS

Revision history

Rev	Date	Description
0.1	2006-05-11	Creation. Description of PCB1647-1.
0.2	2006-05-19	Move PN532 v1.0 information to annex. Add PCB1647-2 description.
0.3	2006-07-21	Minor changes (remove PN532 v1.2 references)
0.4	2006-07-24	Minor corrections
1.0	2007-07-13	Release

PUBLIC

Contact information

For additional information, please visit: http://www.semiconductors.philips.com

For sales office addresses, please send an email to: sales.addresses@www.semiconductors.philips.com

1. Contents

1. Contents ... 3
2. Introduction ... 5
3. PN532 demoboard description (PCB1647-1) ... 6
3.1 Possible configurations ... 6
3.1.1 PCB1647-1, HSU, no handshake mode ... 6
3.1.2 PCB1647-1, HSU, handshake mode ... 7
3.1.3 PCB1647-1, I2C, no handshake mode ... 8
3.1.4 PCB1647-1, I2C, handshake mode ... 9
3.1.5 PCB1647-1, SPI, no handshake mode ... 10
3.1.6 PCB1647-1, SPI, handshake mode ... 11
3.2 Power supply ... 12
3.3 Interfaces with the host controller ... 13
3.3.1 Selection of I2C, SPI or HSU ... 13
3.3.1.1 Selection of SPI mode ... 13
3.3.2 Selection of Handshake mode ... 14
3.4 Electrical diagram ... 15
3.5 Layout ... 18
3.6 Components list ... 25
4. PN532 demoboard description (PCB1647-2) ... 30
4.1 Possible configurations ... 30
4.1.1 PCB1647-2, HSU, no handshake mode ... 30
4.1.2 PCB1647-2, HSU, handshake mode ... 31
4.1.3 PCB1647-2, I2C, no handshake mode ... 32
4.1.4 PCB1647-2, I2C, handshake mode ... 33
4.1.5 PCB1647-2, SPI, no handshake mode ... 34
4.1.6 PCB1647-2, SPI, handshake mode ... 35
4.2 Power supply ... 36
4.3 Interfaces with the host controller ... 36
4.3.1 Selection of I2C, SPI or HSU ... 36
4.3.1.1 Selection of SPI mode ... 36
4.3.2 Selection of Handshake mode ... 36
4.4 Electrical diagram ... 37
4.5 Layout ... 40
4.6 Components list ... 46
5. Annex: PN532 v1.0 ... 51
5.1 PCB1647-1, HSU, no handshake mode, PN532 v1.0 ... 51
5.2 PCB1647-1, HSU, handshake mode, PN532 v1.0 ... 51
5.3 PCB1647-1, I2C, no handshake mode, PN532 v1.0 ... 51
5.4 PCB1647-1, I2C, handshake mode, PN532 v1.0 ... 51
5.5 PCB1647-1, SPI, no handshake mode, PN532 v1.0 ... 52
6. Legal information ... 54
6.1 Definitions ... 54
6.2 Disclaimers ... 54
6.3 Licenses ... 54
6.4 Patents ... 54
6.5 Trademarks ... 54

continued >>

continued >>

2. Introduction

PN532 is an NFCIP-1 compliant chip, with following main features:

- Supports: NFCIP-1, Type B reader, Mifare Classic reader encryption
- Includes 80C51 micro-controller, 40kB ROM, 1kB RAM
- Integrated LDO to allow 2.7 to 5.4V power supply voltage
- Integrated antenna component detector
- Several power reduction modes (Hard power down, Soft power down per embedded SW)
- Several interfaces: SPI, I2C and HSU
- 7 selectable sources of wake-up from soft power down
- Several GP-IOs for external devices control
- Integrated power switch to allow supplying a companion chip (smart card)
- Integrated S2C interface with CLAD line
- Type B protocol selectable via assembly

PN532 demoboard is described in this application note.

PN532 demoboard first version is called **PCB1647-1**. It is described in **paragraph 3**.

Paragraph 3.1 summarizes which straps to close and which ones to open, depending on the interface. Paragraph 3.2 shows how to power the demoboard, paragraph 3.3 explains which choices in the interfaces are possible

Paragraph 3.4, 3.5, and 3.6 contain electrical schematics, layout and components information.

Updated version (minor changes) of PN532 demoboard is called **PCB1647-2**. It is described in **paragraph 4**.

Paragraph 4.1 summarizes which straps to close and which ones to open, depending on the interface. Paragraph 4.2 shows how to power the demoboard, paragraph 4.3 explains which choices in the interfaces are possible

Paragraph 4.4, 4.5, and 4.6 contain electrical schematics, layout and components information.

Annex 5 describes old version PN532 v1.0.

PUBLIC

3. PN532 demoboard description (PCB1647-1)

PCB1647-1 is a reference design for PN532 IC. The interface with the host controller is a high speed UART (HSU).
The demoboard PCB is split into 4 parts:

- The interface and power supply part
- The main part (containing PN532 IC)
- The antenna matching components part
- The antenna itself.

It is possible to break the PCB, for instance to remove the interface and power supply part, in order to connect it to a host controller with a different interface and power sources.

3.1 Possible configurations

This paragraph describes the board configuration for PN532 v1.2 and above versions.

3.1.1 PCB1647-1, HSU, no handshake mode

This is the default configuration of the demoboard. The default serial speed is 115200 bauds.

Table 1. PCB1647-1 configuration, HSU, no handshake mode

Strap connected	Strap not connected	Explanation
ST5 ST6	-	Table 7 on page 13
-	ST4	Table 10 on page 14
	ST2	Table 10 on page 14
-	ST7 ST8	Table 8 on page 13 Table 9 on page 14
ST12 ST13		Voltage sources connection. The straps could be opened to power the board with another supply than the 5V jack.
-	ST3 ST10	Could be connected to select special modes (cf. UM0502-02 table 1). (not used in standard application mode)
-	ST11	Could be solder to use one single voltage source for VBAT and PVDD, when the interface part of the board has been removed.
-	ST1	Could be solder to shortcut the regulator.

PUBLIC

3.1.2 PCB1647-1, HSU, handshake mode

Table 2. PCB1647-1 configuration, HSU, handshake mode

Strap connected	Strap not connected	Explanation
ST5 ST6	-	Table 7 on page 13
ST4	-	Table 10 on page 14
	ST2	Table 10 on page 14
ST7	-	Table 9 on page 14
-	ST8	Table 8 on page 13
ST12 ST13		Voltage sources connection. The straps could be opened to power the board with another supply than the 5V jack.
-	ST3 ST10	Could be connected to select special modes (cf. UM0502-02 table 1). (not used in standard application mode)
-	ST11	Could be solder to use one single voltage source for VBAT and PVDD, when the interface part of the board has been removed.
-	ST1	Could be solder to shortcut the regulator.

PUBLIC

3.1.3 PCB1647-1, I2C, no handshake mode

Table 3. PCB1647-1 configuration, I2C, no handshake mode

Strap connected	Strap not connected	Explanation
ST6	ST5	Table 7 on page 13
-	ST4	Table 10 on page 14
-	ST2	Table 10 on page 14
-	ST7	Table 9 on page 14
-	ST8	Table 8 on page 13
ST12 ST13		Voltage sources connection. The straps could be opened to power the board with another supply than the 5V jack.
-	ST3 ST10	Could be connected to select special modes (cf. UM0502-02 table 1). (not used in standard application mode)
-	ST11	Could be solder to use one single voltage source for VBAT and PVDD, when the interface part of the board has been removed.
-	ST1	Could be solder to shortcut the regulator.

PUBLIC

3.1.4 PCB1647-1, I2C, handshake mode

Table 4. PCB1647-1 configuration, I2C, handshake mode

Strap connected	Strap not connected	Explanation
ST6	ST5	Table 7 on page 13
ST4	-	Table 10 on page 14
	ST2	Table 10 on page 14
ST7	-	Table 9 on page 14
-	ST8	Table 8 on page 13
ST12 ST13		Voltage sources connection. The straps could be opened to power the board with another supply than the 5V jack.
-	ST3 ST10	Could be connected to select special modes (cf. UM0502-02 table 1). (not used in standard application mode)
-	ST11	Could be solder to use one single voltage source for VBAT and PVDD, when the interface part of the board has been removed.
-	ST1	Could be solder to shortcut the regulator.

PUBLIC

3.1.5 PCB1647-1, SPI, no handshake mode

Table 5. PCB1647-1 configuration, SPI, no handshake mode

Strap connected	Strap not connected	Explanation
ST5	ST6	Table 7 on page 13
-	ST4	Table 10 on page 14
ST2	-	Table 10 on page 14
-	ST7	Table 9 on page 14
-	ST8 Solder a 47K pull up resistor to PVDD on P33 (TP3)	SPI mode 0 (Table 8 on page 13)
ST8	Solder a 47K pull up resistor to PVDD on P33 (TP3)	SPI mode 1 (Table 8 on page 13)
Solder P33 (TP3) to ground	ST8	SPI mode 2 (Table 8 on page 13)
ST8 Solder P33 (TP3) to ground	-	SPI mode 3 (Table 8 on page 13)
ST12 ST13		Voltage sources connection. The straps could be opened to power the board with another supply than the 5V jack.
-	ST3 ST10	Could be connected to select special modes (cf. UM0502-02 table 1). (not used in standard application mode)
-	ST11	Could be solder to use one single voltage source for VBAT and PVDD, when the interface part of the board has been removed.
-	ST1	Could be solder to shortcut the regulator.

PUBLIC

3.1.6 PCB1647-1, SPI, handshake mode

Table 6. PCB1647-1 configuration, SPI, handshake mode

Strap connected	Strap not connected	Explanation
ST5	ST6	Table 7 on page 13
-	ST4	Table 10 on page 14
ST2	-	Table 10 on page 14
ST7	-	Table 9 on page 14
-	ST8 Solder a 47K pull up resistor to PVDD on P33 (TP3)	SPI mode 0 (Table 8 on page 13)
ST8	Solder a 47K pull up resistor to PVDD on P33 (TP3)	SPI mode 1 (Table 8 on page 13)
Solder P33 (TP3) to ground	ST8	SPI mode 2 (Table 8 on page 13)
ST8 Solder P33 (TP3) to ground	-	SPI mode 3 (Table 8 on page 13)
ST12 ST13		Voltage sources connection. The straps could be opened to power the board with another supply than the 5V jack.
-	ST3 ST10	Could be connected to select special modes (cf. UM0502-02 table 1). (not used in standard application mode)
-	ST11	Could be solder to use one single voltage source for VBAT and PVDD, when the interface part of the board has been removed.
-	ST1	Could be solder to shortcut the regulator.

3.2 Power supply

The demoboard shall be supplied with an external +5V supply voltage using a specific jack (figure 1).

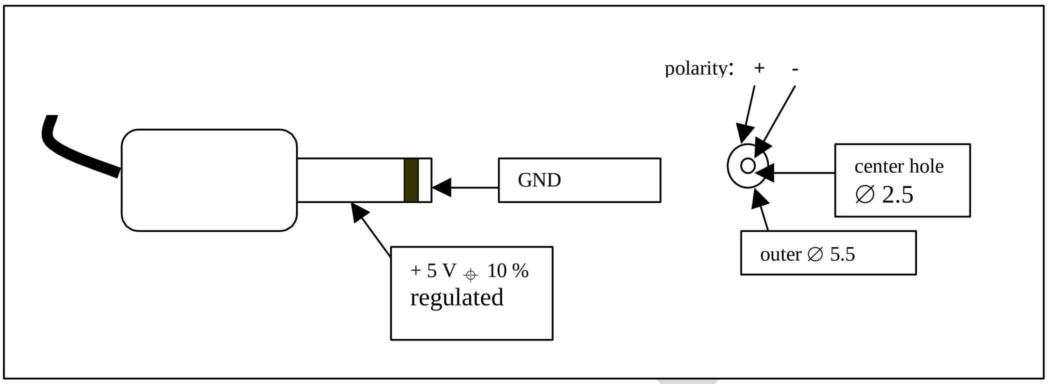

Fig 1. Supply of PCB1647-1

From this supply voltage is derived the 2 supplies used by the PN532: V_{BAT} and P_{VDD}. On the demoboard, V_{BAT} and P_{VDD} are connected, but it is possible to disconnect them (disconnect ST11, ST12 and ST13), in order to link V_{BAT} for example to a battery supply, and P_{VDD} to another supply voltage.

V_{BAT} must be between 2.7V and 5V; P_{VDD} must be between 1.6V and 3.6V. (Cf. PN532 datasheet). V_{BAT} must be present before P_{VDD}.

PUBL

3.3 Interfaces with the host controller

3.3.1 Selection of I2C, SPI or HSU

The host interface selection is done by a hardware configuration (interface mode lines I0 and I1) during the power up sequence of the chip.
The PN532 firmware reads I0, I1 ports during power up sequence and sets the ConfigIO_I[1..0] bits with the corresponding configuration.

PCB1647-1 is configured in HSU mode. However, it is possible to change the configuration, in order to use SPI or I2C links.
I0 and I1 value can be chosen using ST5 and ST6 straps.

PUBLIC

Table 7. Interface selection

Host interface	I0 Pin (pin #16)	I1 pin (pin #17)	Strap connected	Strap not connected
HSU (high speed UART)	0	0	ST5 ST6	
I2C	1	0	ST6	ST5
SPI	0	1	ST5	ST6

3.3.1.1 Selection of SPI mode

With PN532 v1.2

- Handshake mode selectable with P31, for all interfaces (I2C, HSU, SPI)
- SPI mode selectable with P33 and P30

Table 8. SPI mode selection

SPI mode	P30	P33	PN532 v1.2, PCB1647-1	
			Strap connected	Strap not connected
Mode 0	1	1		ST8 P33 pulled up 47K to PVDD
Mode 1	0	1	ST8	P33 pulled up 47K to PVDD
Mode 2	1	0	P33 to ground	ST8
Mode 3	0	0	ST8 P33 to ground	

3.3.2 Selection of Handshake mode

Handshake mode is described in the user manual of PN532 (UM0502-01). The handshake mode is selectable via P31. P31 value can be chosen using ST7 of PCB1647-1.

Table 9. Handshake mode or standard mode selection

Handshake	Selection Pin P31 (pin #26)	Strap connected	Strap not connected
Handshake is selected	0	ST7	
Standard mode	1		ST7

On PCB 1647-1, P32 and MISO lines are carried on the same line MISO_OR_H_REQ. The choice of using P32 (H_REQ) or MISO is done via ST2 and ST4.

Table 10. MISO_OR_H_REQ signal connection

Handshake		MISO_OR_HREQ	PN532 v1.2	
		PN532 v1.2	Strap connected	Strap not connected
Handshake is selected	HSU I2C	HREQ pin P32 (pin #32)	ST4	ST2
	SPI	HREQ pin P32 (pin #32)	-	ST2 ST4
Normal mode	HSU I2C	Not used	-	ST4 ST2
	SPI	MISO (pin #29)	ST2	ST4

PUBLI

3.4 Electrical diagram

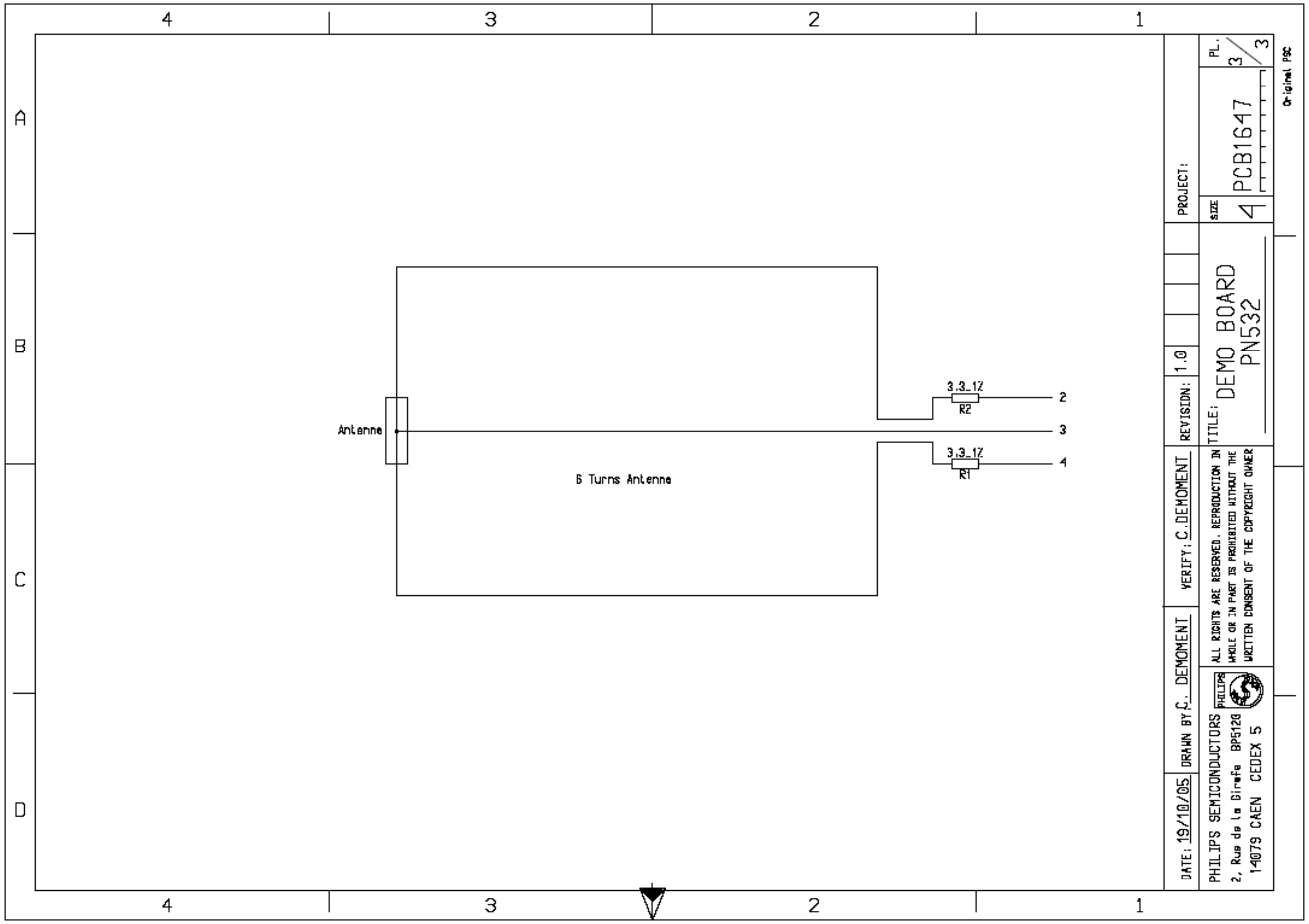
4
3
2
1
A
B
C
D
Antenna
6 Turns Antenna
3.3_1%
R2
3.3_1%
R1
2
3
4
PROJECT:
PCB1647
SIZE
A4
PL.
3/3
Original PSC
REVISION: 1.0
TITLE:
DEMO BOARD
PN532
VERIFY: C.DEMOMENT
DRAWN BY: C. DEMOMENT
DATE: 19/10/05
ALL RIGHTS ARE RESERVED. REPRODUCTION IN WHOLE OR IN PART IS PROHIBITED WITHOUT THE WRITTEN CONSENT OF THE COPYRIGHT OWNER
PHILIPS SEMICONDUCTORS
2, Rue de la Girafe BP5120
14079 CAEN CEDEX 5
PHILIPS

Fig 2. Antenna

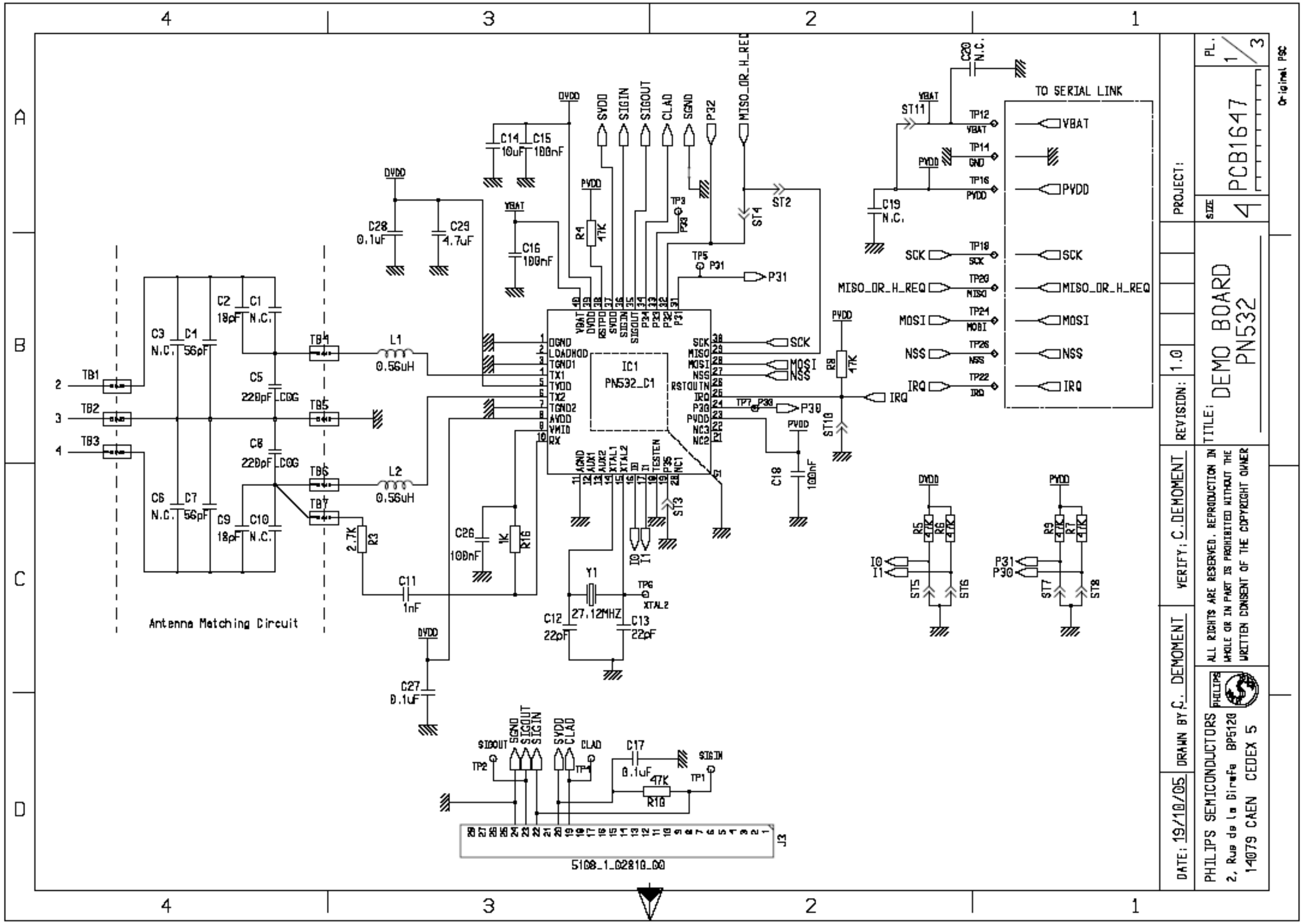
4
3
2
1
A
B
C
D
DVDD
C14 10uF
C15 100nF
SVDD
SIGIN
SIGOUT
CLAD
SGND
P32
MISO_OR_H_REQ
C20 N.C.
VBAT
ST11
TO SERIAL LINK
TP12 VBAT
TP14 GND
TP16 PVDD
PVDD
C19 N.C.
SCK
MISO_OR_H_REQ
MOSI
NSS
IRQ
TP18 SCK
TP20 MISO
TP24 MOSI
TP26 NSS
TP22 IRQ
C28 0.1uF
C29 4.7uF
C16 100nF
R1 47K
TP3
P23
ST4
ST2
TP5
P31
C2 18pF
C1 N.C.
C3 N.C.
C4 56pF
C5 220pF C0G
C8 220pF C0G
C6 N.C.
C7 56pF
C9 18pF
C10 N.C.
TB1
TB2
TB3
TB4
TB5
TB6
TB7
L1 0.56uH
L2 0.56uH
IC1
PN532_C1
R8 47K
TP7 P30
ST10
C18 100nF
R3 2.7K
R16 1K
C26 100nF
C11 1nF
Y1 27.12MHZ
C12 22pF
C13 22pF
TP6 XTAL2
ST3
I0
I1
R5 47K
R6 47K
ST5
ST6
R9 47K
R7 47K
ST7
ST8
P31
P30
Antenna Matching Circuit
C27 0.1uF
SIGOUT
SGND
TP2
CLAD
C17 0.1uF
47K R10
SIGIN
TP1
TP4
J3
5108_1_02810_00
PROJECT:
PCB1647
SIZE 4
PL. 1/3
Original PSC
TITLE:
DEMO BOARD PN532
REVISION: 1.0
VERIFY: C. DEMOMENT
DRAWN BY: C. DEMOMENT
DATE: 19/10/05
ALL RIGHTS ARE RESERVED. REPRODUCTION IN WHOLE OR IN PART IS PROHIBITED WITHOUT THE WRITTEN CONSENT OF THE COPYRIGHT OWNER
PHILIPS
PHILIPS SEMICONDUCTORS
2, Rue de la Girafe BP5120
14079 CAEN CEDEX 5

Fig 3. Main board

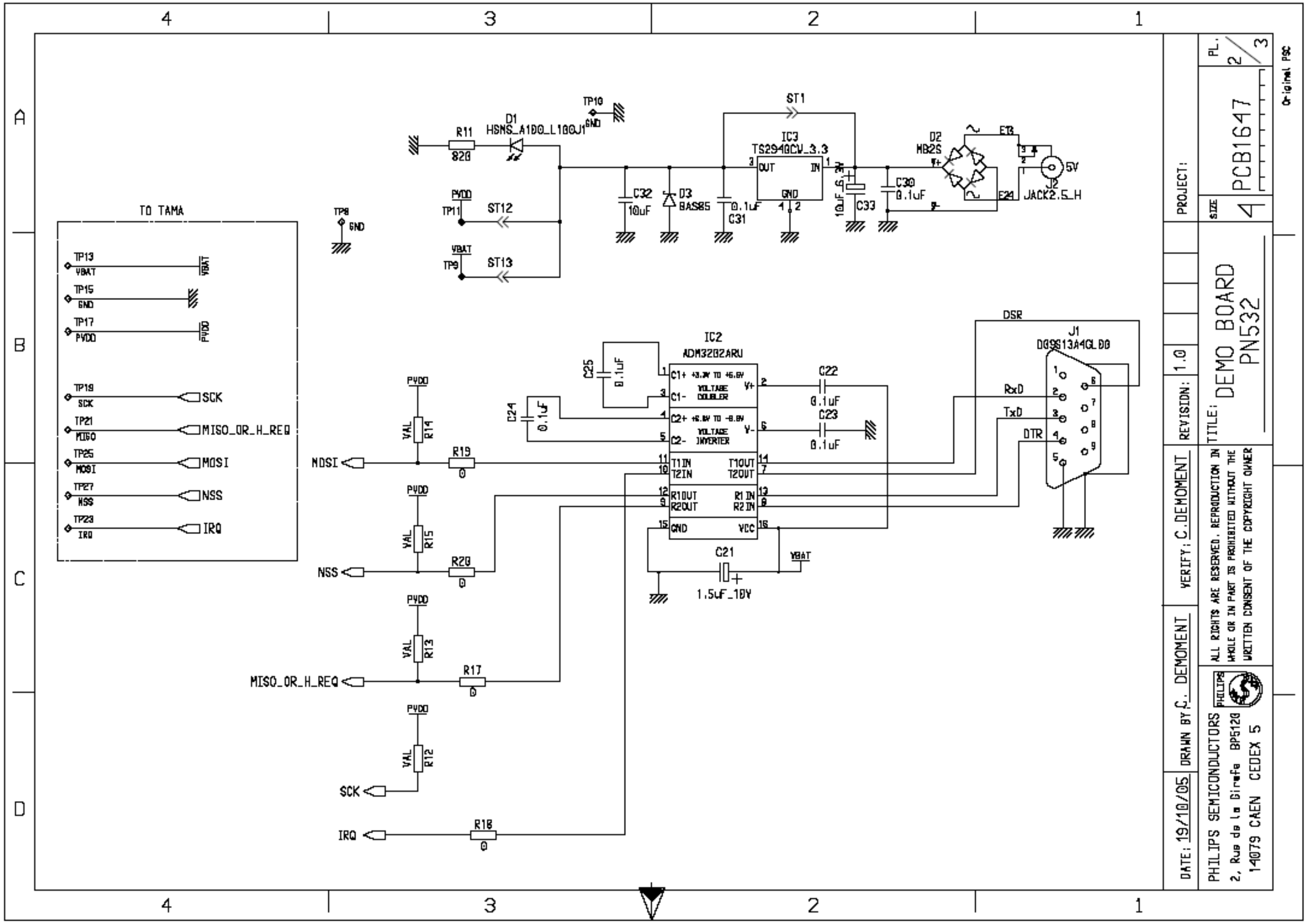
4
3
2
1
A
B
C
D
TO TAMA
TP13
VBAT
VBAT
TP15
GND
TP17
PVDD
PVDD
TP19
SCK
SCK
TP21
MISO
MISO_OR_H_REQ
TP25
MOSI
MOSI
TP27
NSS
NSS
TP23
IRQ
IRQ
TP8
GND
TP10
GND
R11
820
D1
HSMS_A100_L100J1
PVDD
TP11
ST12
VBAT
TP9
ST13
C32
10uF
D3
BAS85
0.1uF
C31
ST1
IC3
TS2940CV_3.3
OUT
IN
GND
10uF_6.3V
C33
C30
0.1uF
D2
MB2S
E13
E24
J2
JACK2.5_H
5V
IC2
ADM3202ARU
C25
0.1uF
C24
0.1uF
C1+
C1-
+3.3V TO +6.6V VOLTAGE DOUBLER
C2+
C2-
+6.6V TO -6.6V VOLTAGE INVERTER
V+
V-
T1IN
T2IN
T1OUT
T2OUT
R1OUT
R2OUT
R1IN
R2IN
GND
VCC
C22
0.1uF
C23
0.1uF
C21
1.5uF_10V
VBAT
DSR
J1
DG9S13A4GL00
RxD
TxD
DTR
PVDD
VAL
R14
MOSI
R19
0
PVDD
VAL
R15
NSS
R20
0
PVDD
VAL
R13
MISO_OR_H_REQ
R17
0
PVDD
VAL
R12
SCK
IRQ
R18
0
PROJECT:
SIZE
4
PCB1647
PL.
2/3
Original PSC
TITLE:
DEMO BOARD
PN532
REVISION: 1.0
VERIFY: C. DEMOMENT
DRAWN BY C. DEMOMENT
DATE: 19/10/05
ALL RIGHTS ARE RESERVED. REPRODUCTION IN WHOLE OR IN PART IS PROHIBITED WITHOUT THE WRITTEN CONSENT OF THE COPYRIGHT OWNER
PHILIPS
PHILIPS SEMICONDUCTORS
2, Rue de la Girafe BP5120
14079 CAEN CEDEX 5

Fig 4. Interface and power supply

3.5 Layout

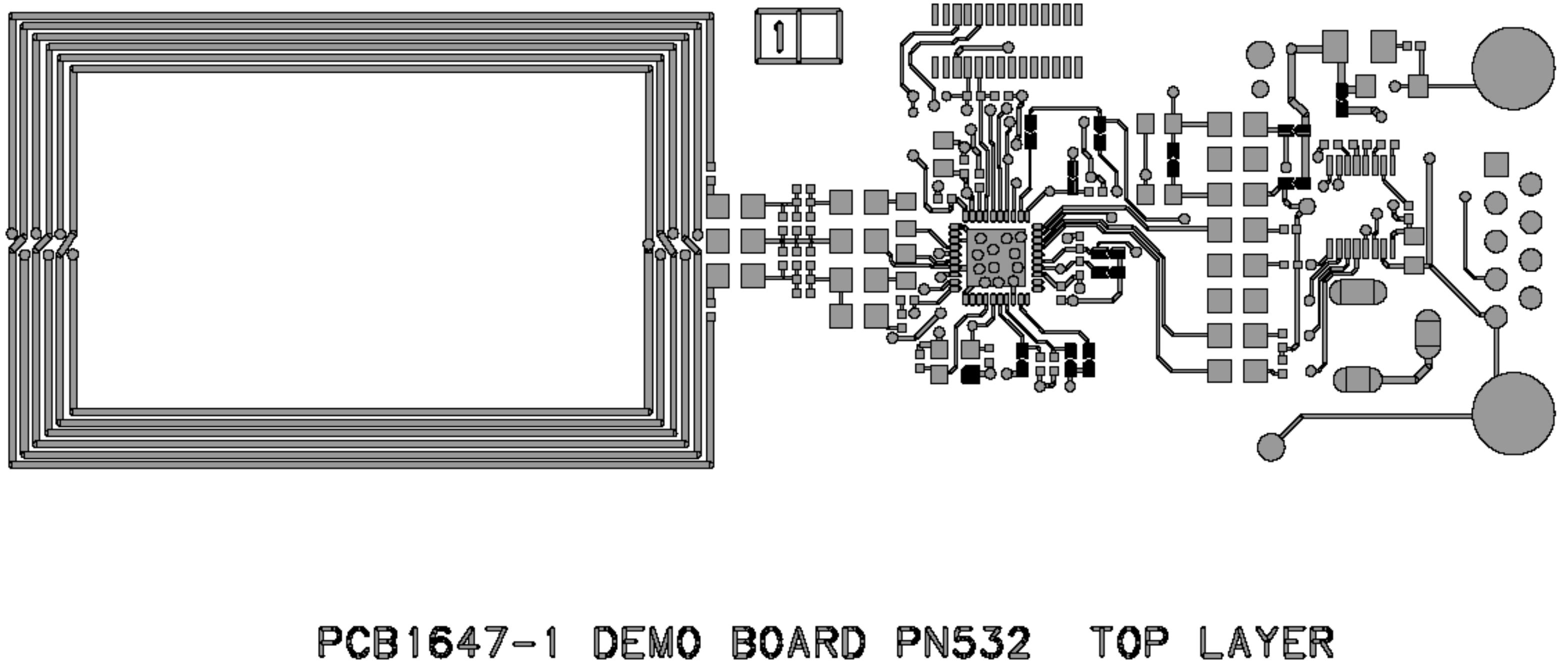
1
PCB1647-1 DEMO BOARD PN532 TOP LAYER

Fig 5. film 1

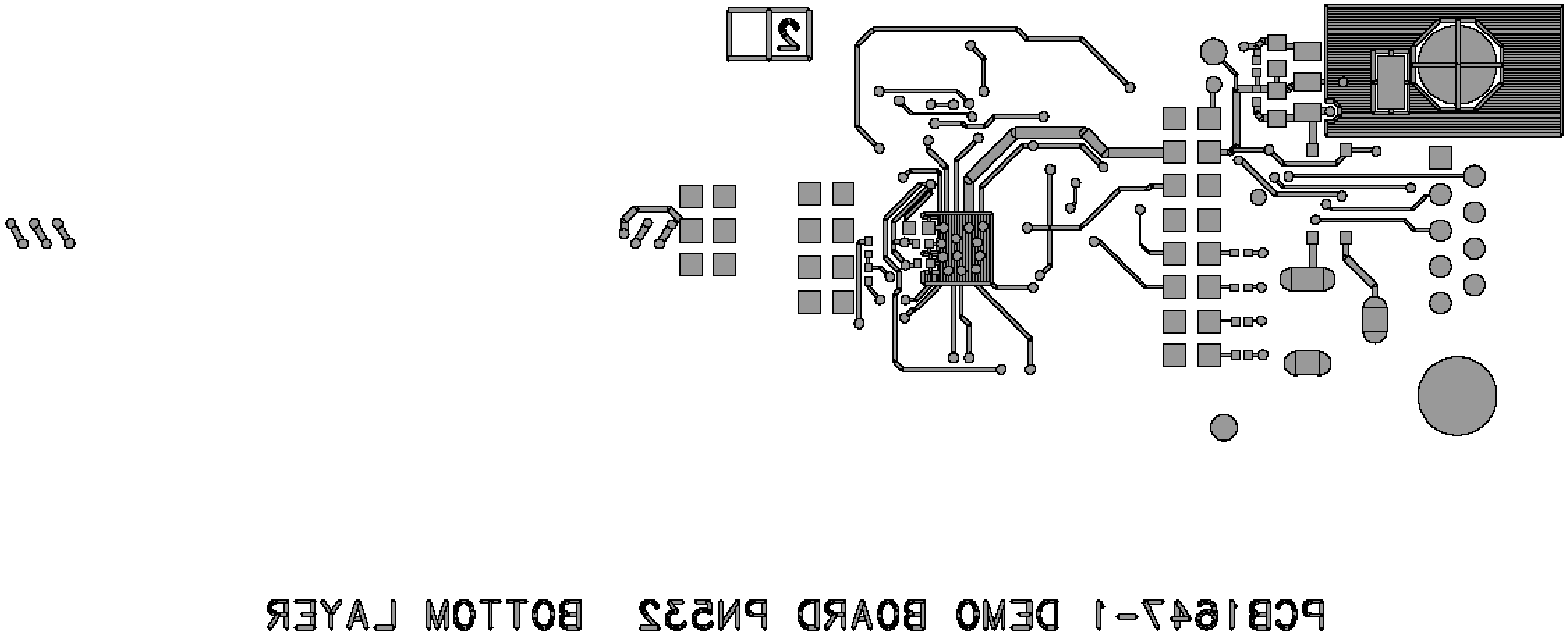
2
PCB1647-1 DEMO BOARD PN532 BOTTOM LAYER

Fig 6. film 2

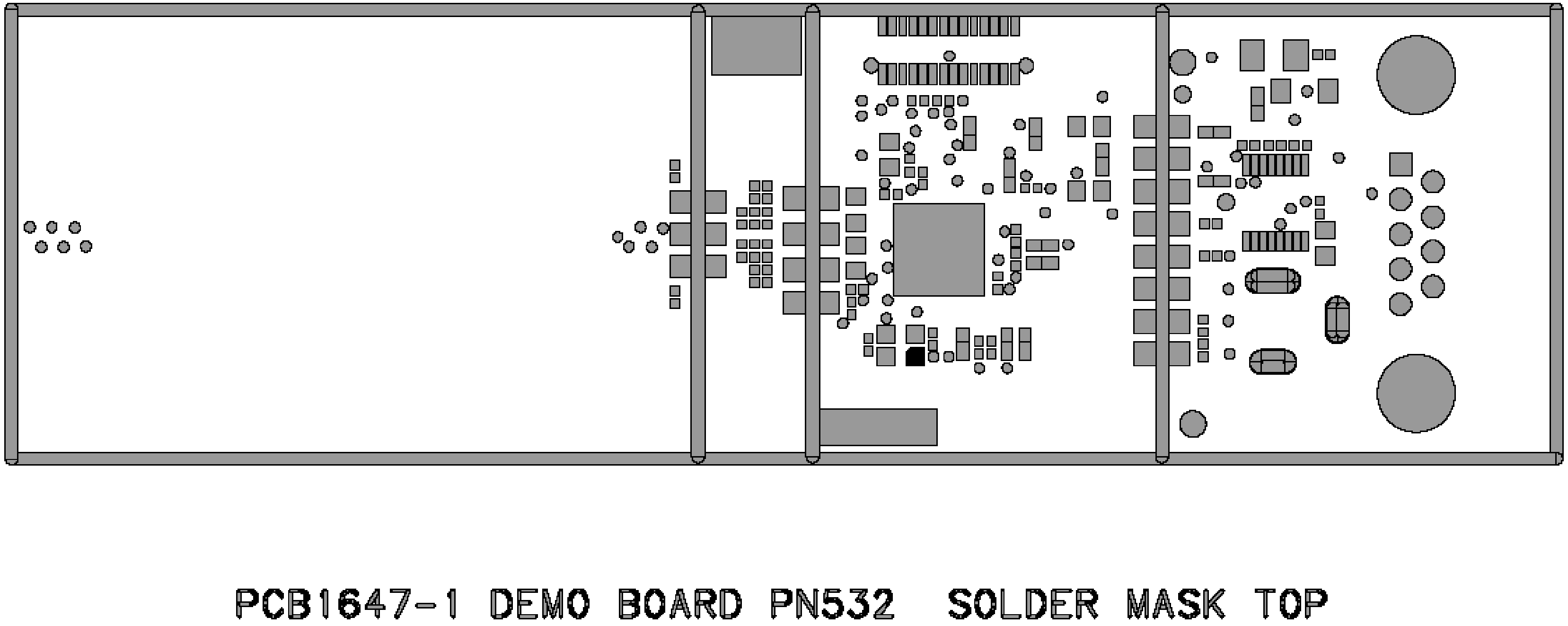
PCB1647-1 DEMO BOARD PN532 SOLDER MASK TOP

Fig 7. film 3

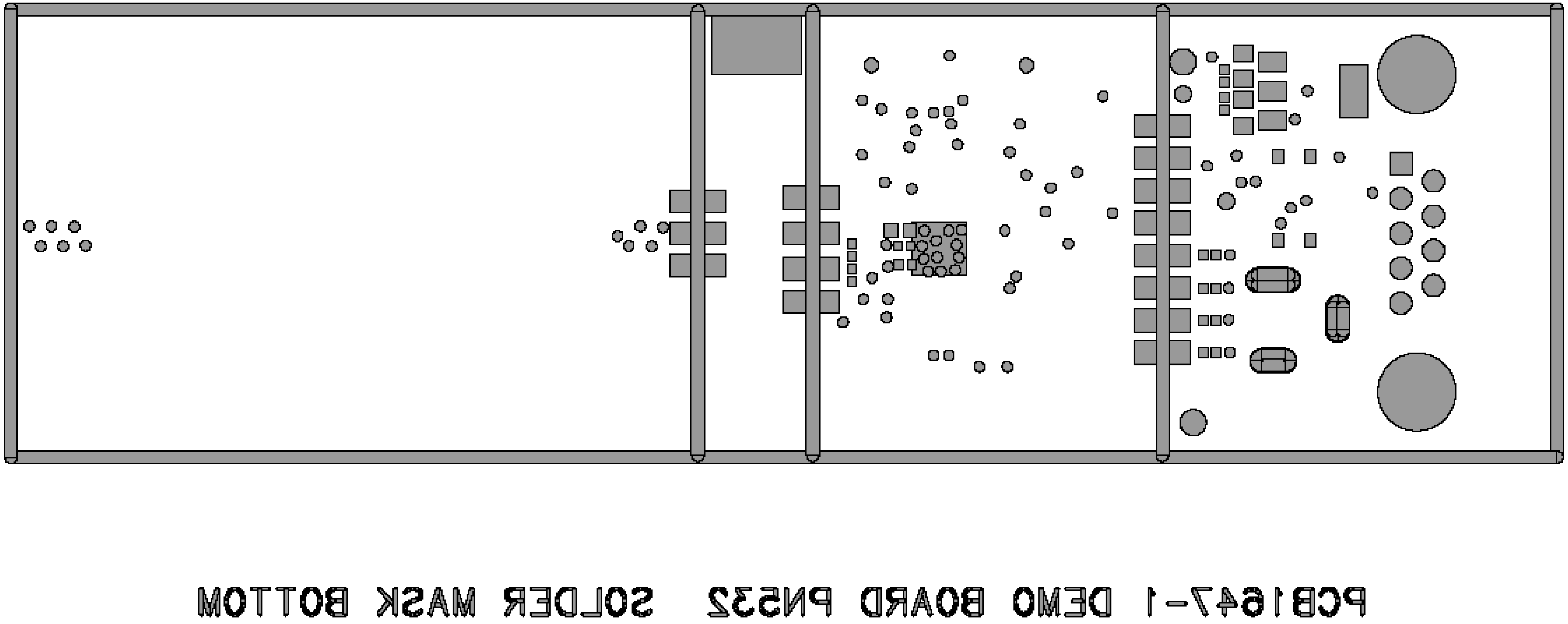
PCB1647-1 DEMO BOARD PN532 SOLDER MASK BOTTOM

Fig 8. film 4

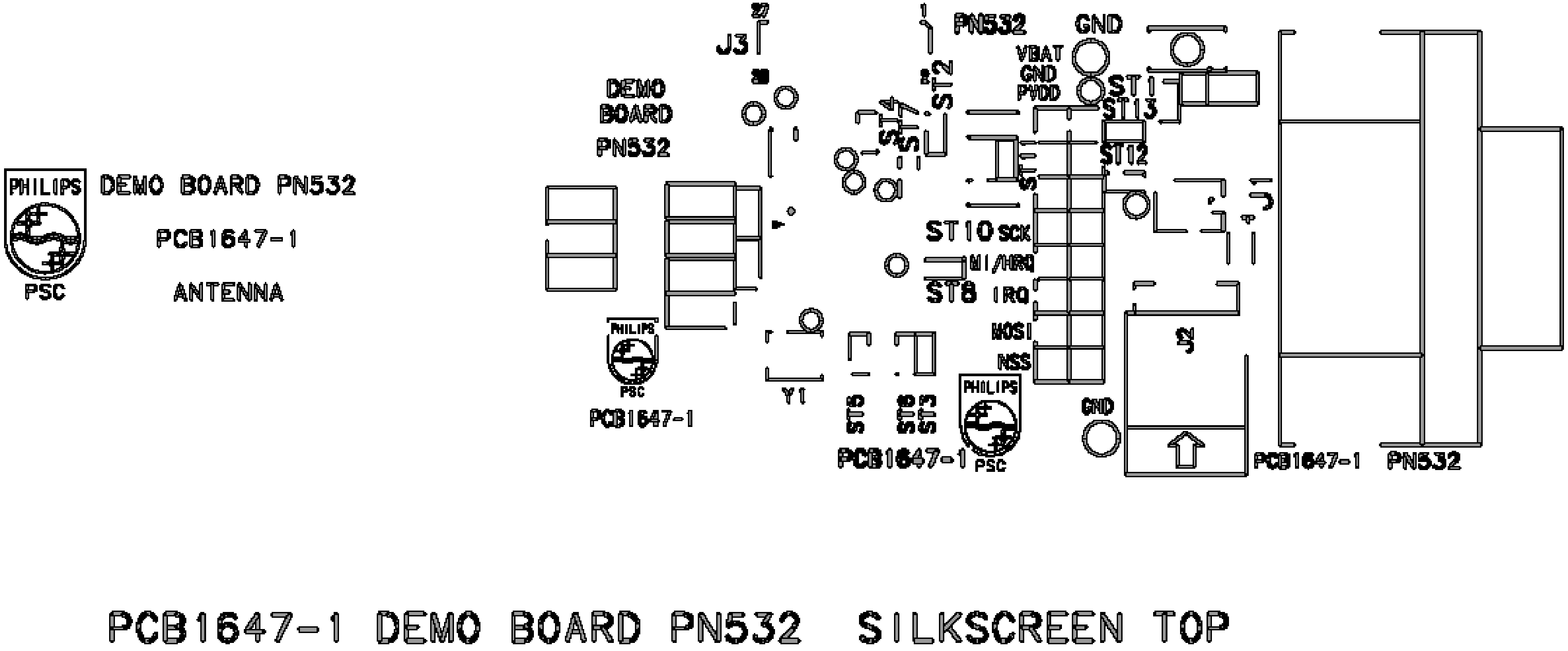
PHILIPS
PSC
DEMO BOARD PN532
PCB1647-1
ANTENNA
DEMO
BOARD
PN532
J3
PHILIPS
PSC
PCB1647-1
Y1
ST4
ST7
ST2
PN532
GND
VBAT
GND
PVDD
ST1
ST13
ST12
ST11
ST10 SCK
MI/HRQ
ST8 IRQ
MOSI
NSS
ST5
ST6
ST3
PHILIPS
PSC
PCB1647-1
GND
J1
J2
PCB1647-1
PN532
PCB1647-1 DEMO BOARD PN532 SILKSCREEN TOP

Fig 9. film 5

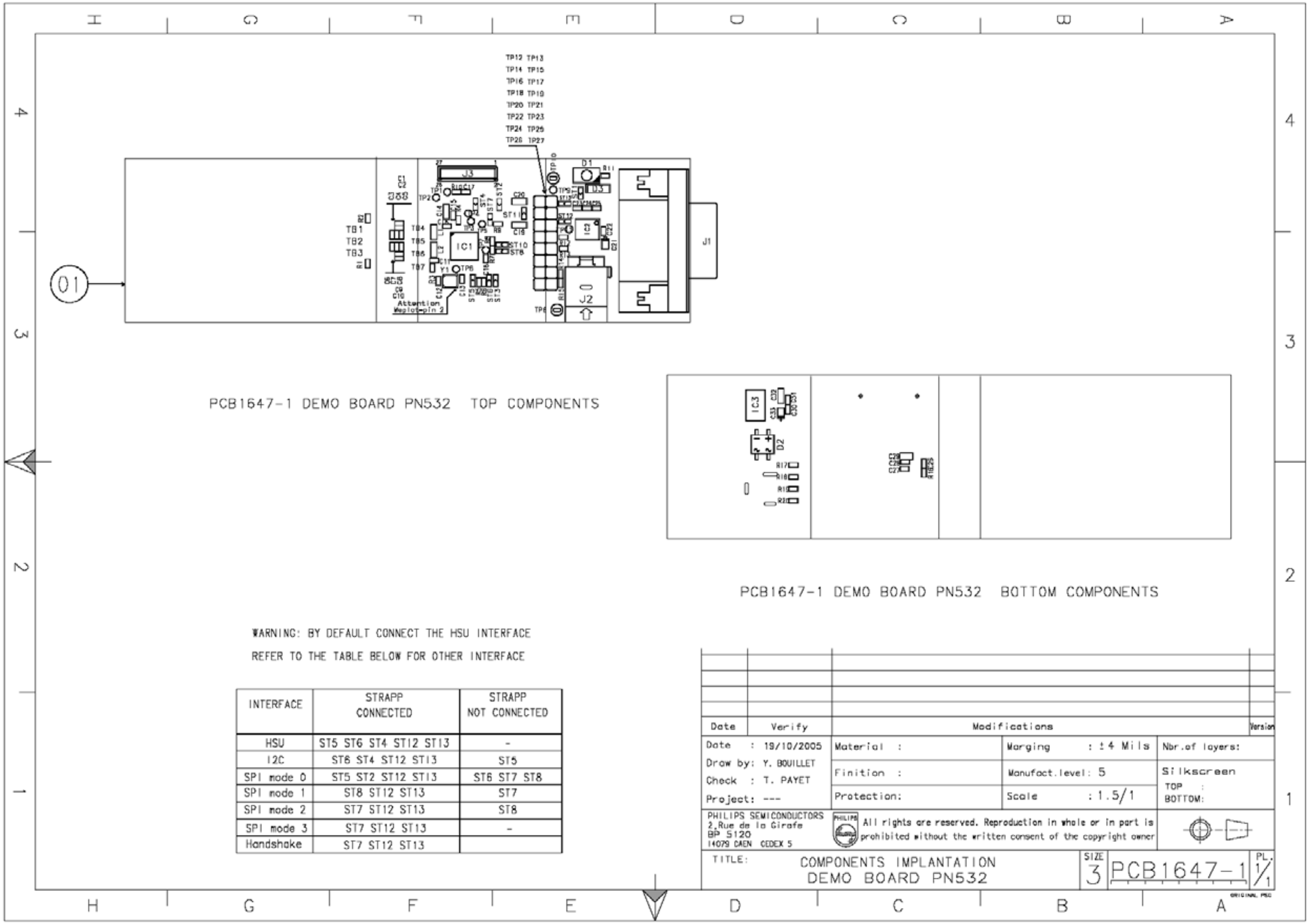
H
G
F
E
D
C
B
A
4
3
2
1
01
J1
J2
J3
IC1
IC3
D1
D2
TP12 TP13
TP14 TP15
TP16 TP17
TP18 TP19
TP20 TP21
TP22 TP23
TP24 TP25
TP26 TP27
TB1
TB2
TB3
Attention
Wep1ot=pin 2

PCB1647-1 DEMO BOARD PN532 TOP COMPONENTS

PCB1647-1 DEMO BOARD PN532 BOTTOM COMPONENTS

WARNING: BY DEFAULT CONNECT THE HSU INTERFACE

REFER TO THE TABLE BELOW FOR OTHER INTERFACE

INTERFACE	STRAPP CONNECTED	STRAPP NOT CONNECTED
HSU	ST5 ST6 ST4 ST12 ST13	-
I2C	ST6 ST4 ST12 ST13	ST5
SPI mode 0	ST5 ST2 ST12 ST13	ST6 ST7 ST8
SPI mode 1	ST8 ST12 ST13	ST7
SPI mode 2	ST7 ST12 ST13	ST8
SPI mode 3	ST7 ST12 ST13	-
Handshake	ST7 ST12 ST13	

Date	Verify	Modifications	Version

Date : 19/10/2005
Draw by: Y. BOUILLET
Check : T. PAYET
Project: ---

Material :
Finition :
Protection:

Warging : ±4 Mils
Manufact.level: 5
Scale : 1.5/1

Nbr.of layers:
Silkscreen
TOP :
BOTTOM:

PHILIPS SEMICONDUCTORS
2,Rue de la Girafe
BP 5120
14079 CAEN CEDEX 5

All rights are reserved. Reproduction in whole or in part is prohibited without the written consent of the copyright owner

TITLE: COMPONENTS IMPLANTATION
DEMO BOARD PN532

SIZE 3

PCB1647-1

PL. 1/1

ORIGINAL PSC

Fig 10. film 6

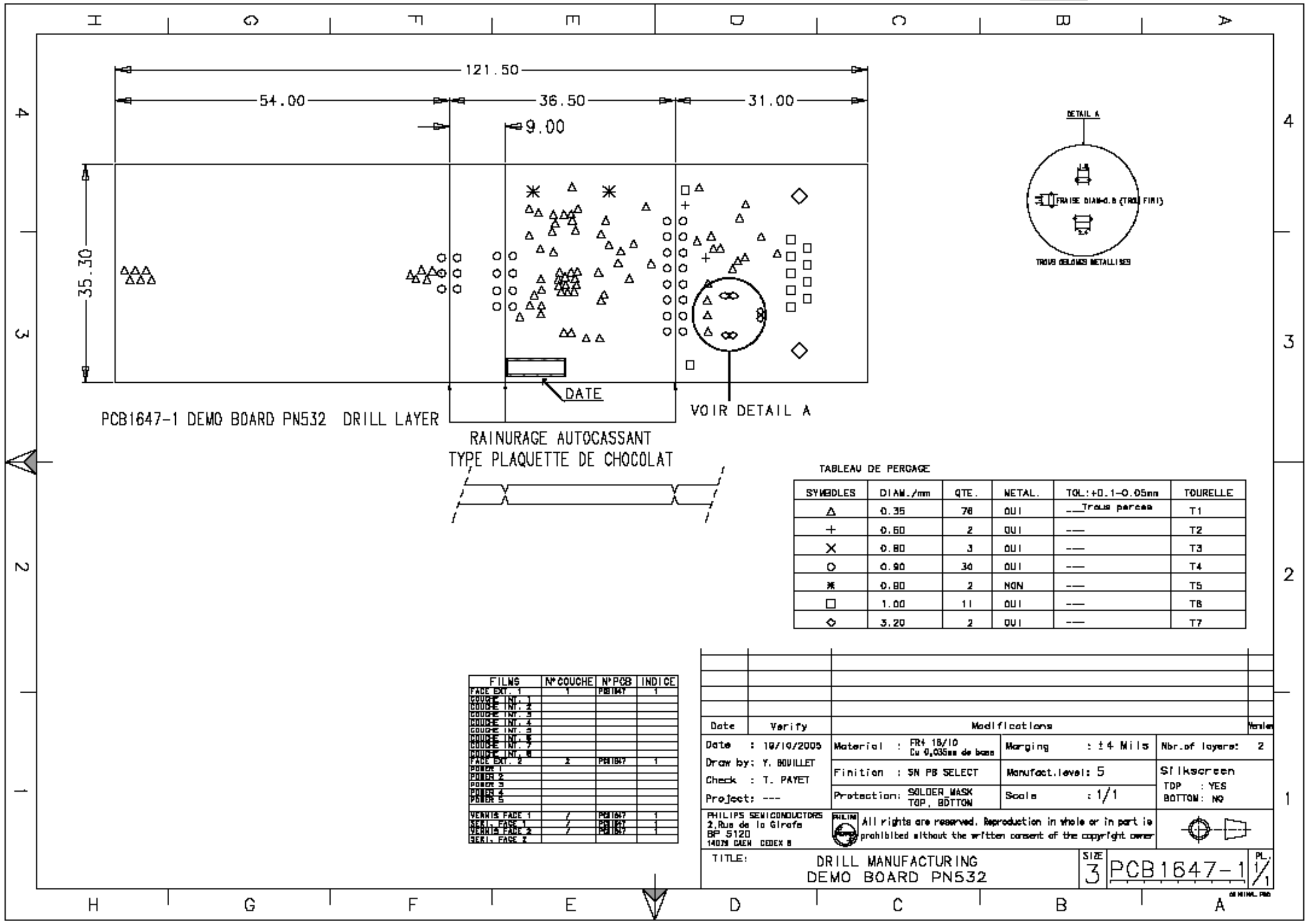
H
G
F
E
D
C
B
A
4
3
2
1
121.50
54.00
36.50
31.00
9.00
35.30
DATE
VOIR DETAIL A
PCB1647-1 DEMO BOARD PN532 DRILL LAYER
RAINURAGE AUTOCASSANT
TYPE PLAQUETTE DE CHOCOLAT
DETAIL A
FRAISE DIAM=0.8 (TROU FINI)
TROUS OBLONGS METALLISES

TABLEAU DE PERCAGE

SYMBOLES	DIAM./mm	QTE.	METAL.	TOL:+0.1-0.05mm	TOURELLE
△	0.35	78	OUI	---Trous perces	T1
+	0.60	2	OUI	---	T2
×	0.80	3	OUI	---	T3
○	0.90	30	OUI	---	T4
✳	0.80	2	NON	---	T5
□	1.00	11	OUI	---	T6
◇	3.20	2	OUI	---	T7

FILMS	N° COUCHE	N° PCB	INDICE
FACE EXT. 1	1	PCB1647	1
COUCHE INT. 1			
COUCHE INT. 2			
COUCHE INT. 3			
COUCHE INT. 4			
COUCHE INT. 5			
COUCHE INT. 6			
COUCHE INT. 7			
COUCHE INT. 8			
FACE EXT. 2	2	PCB1647	1
POWER 1			
POWER 2			
POWER 3			
POWER 4			
POWER 5			
VERNIS FACE 1	/	PCB1647	1
SERI. FACE 1	/	PCB1647	1
VERNIS FACE 2	/	PCB1647	1
SERI. FACE 2			

Date	Verify	Modifications	Version

Date : 19/10/2005
Draw by: Y. BOUILLET
Check : T. PAYET
Project: ---

Material : FR4 16/10 Cu 0,035mm de base
Finition : SN PB SELECT
Protection: SOLDER_MASK TOP, BOTTOM

Marging : ±4 Mils
Manufact.level: 5
Scale : 1/1

Nbr.of layers: 2
Silkscreen
TOP : YES
BOTTOM: NO

PHILIPS SEMICONDUCTORS
2,Rue de la Girafe
BP 5120
14079 CAEN CEDEX 5

All rights are reserved. Reproduction in whole or in part is prohibited without the written consent of the copyright owner

TITLE: DRILL MANUFACTURING
DEMO BOARD PN532

SIZE 3
PCB1647-1
PL. 1/1

Fig 11. film 7

3.6 Components list

REFERENCE	GEOMETRY	VALUE	SPECIFICATION
---------	--------	-----	-------------
C1	c0402	N.C.	Capacitor,CER2,0402,***NOT,CONNECTED***
C2	c0402	18pF	Capacitor,CER2,0402,C0G,50V,5%
C3	c0402	N.C.	Capacitor,CER2,0402,***NOT,CONNECTED***
C4	c0402	56pF	Capacitor,CER2,0402,C0G,50V,5%
C5	c0402	220pF_C0G	Capacitor,CER2,0402,C0G,50V,GPR15_5C_1H_221
C6	c0402	N.C.	Capacitor,CER2,0402,***NOT,CONNECTED***
C7	c0402	56pF	Capacitor,CER2,0402,C0G,50V,5%
C8	c0402	220pF_C0G	Capacitor,CER2,0402,C0G,50V,GPR15_5C_1H_221
C9	c0402	18pF	Capacitor,CER2,0402,C0G,50V,5%
C10	c0402	N.C.	Capacitor,CER2,0402,***NOT,CONNECTED***
C11	c0402	1nF	Capacitor,CER2,0402,X7R,50V,10%
C12	c0402	22pF	Capacitor,CER2,0402,C0G,50V,5%
C13	c0402	22pF	Capacitor,CER2,0402,C0G,50V,5%
C14	c0805	10uF	Capacitor,CER2,0805,X5R,6.3V,10%
C15	c0402	100nF	Capacitor,CER2,0402,X7R,10V,10%
C16	c0402	100nF	Capacitor,CER2,0402,X7R,10V,10%
C17	c0402	0.1uF	Capacitor,CER2,0402,X7R,16V,-10+10%,PDC
C18	c0402	100nF	Capacitor,CER2,0402,X7R,10V,10%
C19	c0805	N.C.	Capacitor,CER2,0805,***NOT,CONNECTED***
C20	c0805	N.C.	Capacitor,CER2,0805,***NOT,CONNECTED***
C21	taj_r	1.5uF_10V	AVX:TAJR155K010,Tantal,Capacitor,Package:R,10%

PUBLIC

C22	c0402	0.1uF	Capacitor,CER2,0402,X7R,16V,-10+10%,PDC
C23	c0402	0.1uF	Capacitor,CER2,0402,X7R,16V,-10+10%,PDC
C24	c0402	0.1uF	Capacitor,CER2,0402,X7R,16V,-10+10%,PDC
C25	c0402	0.1uF	Capacitor,CER2,0402,X7R,16V,-10+10%,PDC
C26	c0402	100nF	Capacitor,CER2,0402,Y5V,16V,-20+80%
C27	c0402	0.1uF	Capacitor,CER2,0402,X7R,16V,-10+10%,PDC
C28	c0402	0.1uF	Capacitor,CER2,0402,X7R,16V,-10+10%,PDC
C29	c0603	4.7uF	Capacitor,CER2,0603,X5R,6.3V,10%
C30	c0402	0.1uF	Capacitor,CER2,0402,X7R,16V,-10+10%,PDC
C31	c0402	0.1uF	Capacitor,CER2,0402,X7R,16V,-10+10%,PDC
C32	c0805	10uF	Capacitor,CER2,0805,X5R,6.3V,10%
C33	taj_r	10uF_6.3V	AVX:TAJR106K006,Tantal,Capacitor,Package:R,10%
D1	topled	HSMS_A100_L100J1	AGILENT:Red,LED,Topled,30mA
D2	to269aa	MB2S	GENERAL_SEMICONDUTOR:SMD,Bridge,Rectifier,200V,0.5A
D3	sod80	BAS85	PHILIPS:Schottky,Barrier,Diode,30V,0.2A
IC1	mlf6x40_0.5	PN532_C1	PHILIPS:Package:HVQFN40
IC2	sot403_1	ADM3202ARU	ANALOG-DEVICES:Low,Power,3.3V,RS232,Line-Driver,Receiver,Package:TSSOP16
IC3	sot223	TS2940CW_3.3	TSC:Ultra-Low,Dropout,Fixed,Positive,voltage,Regulator,3.3V,1A,SOT223
J1	subd_09fc	D09S13A4GL00	FCI:Delta-D,Connector,Right-Angle,Female,Norm,HE5
J2	jack2.5_h	JACK2.5_H	CLIFF:DC10B,Power,Connector,Horizontal,2.5mm
J3	5108_2x14s_0.8md	5108_1_02810_00	WP-PRODUCTS:5108,Serie,SMT,Connector,Straight,Male,2x14pins,0.8mm
L1	self_mlf2012	0.56uH	TDK:MLF2012DR56K,Chip,Inductor,SMD,0.15A,10%
L2	self_mlf2012	0.56uH	TDK:MLF2012DR56K,Chip,Inductor,SMD,0.15A,10%
R1	r0402	3.3_1%	Resistor,Package:0402,1%,1/16W
R2	r0402	3.3_1%	Resistor,Package:0402,1%,1/16W
R3	r0402	2.7K	Resistor,Package:0402,5%,1/16W

PUBLIC

R4	r0402	47K	Resistor,Package:0402,5%,1/16W
R5	r0402	47K	Resistor,Package:0402,5%,1/16W
R6	r0402	47K	Resistor,Package:0402,5%,1/16W
R7	r0402	47K	Resistor,Package:0402,5%,1/16W
R8	r0402	47K	Resistor,Package:0402,5%,1/16W
R9	r0402	47K	Resistor,Package:0402,5%,1/16W
R10	r0402	47K	Resistor,Package:0402,5%,1/16W
R11	r0402	820	Resistor,Package:0402,5%,1/16W
R12	r0402	A DEFINIR	Resistor,Package:0402,***TO,BE,DEFINE***
R13	r0402	A DEFINIR	Resistor,Package:0402,***TO,BE,DEFINE***
R14	r0402	A DEFINIR	Resistor,Package:0402,***TO,BE,DEFINE***
R15	r0402	A DEFINIR	Resistor,Package:0402,***TO,BE,DEFINE***
R16	r0402	1K	Resistor,Package:0402,5%,1/16W
R17	r0402	0	Resistor,Package:0402,5%,1/16W
R18	r0402	0	Resistor,Package:0402,5%,1/16W
R19	r0402	0	Resistor,Package:0402,5%,1/16W
R20	r0402	0	Resistor,Package:0402,5%,1/16W
ST1	chevron_a	CHEVRON	***NOT,CONNECTED***
ST2	chevron_a	CHEVRON	***NOT,CONNECTED***
ST3	chevron_a	CHEVRON	***NOT,CONNECTED***
ST4	chevron_a	CHEVRON	***NOT,CONNECTED***
ST5	chevron_a	CHEVRON	***NOT,CONNECTED***
ST6	chevron_a	CHEVRON	***NOT,CONNECTED***
ST7	chevron_a	CHEVRON	***NOT,CONNECTED***
ST8	chevron_a	CHEVRON	***NOT,CONNECTED***
ST10	chevron_a	CHEVRON	***NOT,CONNECTED***

PUBLIC

ST11	chevron_a	CHEVRON	***NOT,CONNECTED***
ST12	chevron_a	CHEVRON	***NOT,CONNECTED***
ST13	chevron_a	CHEVRON	***NOT,CONNECTED***
TB1	bar2sp	CAVAL_2.54	Pattern,Single,Row,2,pin,+,ANTELEC,CCM1D
TB2	bar2sp	CAVAL_2.54	Pattern,Single,Row,2,pin,+,ANTELEC,CCM1D
TB3	bar2sp	CAVAL_2.54	Pattern,Single,Row,2,pin,+,ANTELEC,CCM1D
TB4	bar2sp	CAVAL_2.54	Pattern,Single,Row,2,pin,+,ANTELEC,CCM1D
TB5	bar2sp	CAVAL_2.54	Pattern,Single,Row,2,pin,+,ANTELEC,CCM1D
TB6	bar2sp	CAVAL_2.54	Pattern,Single,Row,2,pin,+,ANTELEC,CCM1D
TB7	bar2sp	CAVAL_2.54	Pattern,Single,Row,2,pin,+,ANTELEC,CCM1D
TP1	plage.75	PLAGE.75	***NOT,CONNECTED***
TP2	plage.75	PLAGE.75	***NOT,CONNECTED***
TP3	plage.75	PLAGE.75	***NOT,CONNECTED***
TP4	plage.75	PLAGE.75	***NOT,CONNECTED***
TP5	plage.75	PLAGE.75	***NOT,CONNECTED***
TP6	plage.75	PLAGE.75	***NOT,CONNECTED***
TP7	plage.75	PLAGE.75	***NOT,CONNECTED***
TP8	tpboucle1.0	5001	KEYSTONE:Black,Testpoint,Type1
TP9	tpvia0.6	TPVIA0.6	Hole,0.6
TP10	tpboucle1.0	5001	KEYSTONE:Black,Testpoint,Type1
TP11	tpvia0.6	TPVIA0.6	Hole,0.6
TP12	tp0.9	CAVAL_2.54	Pattern,Single,Row,1,pin,+,ANTELEC,CCM1D
TP13	tp0.9	CAVAL_2.54	Pattern,Single,Row,1,pin,+,ANTELEC,CCM1D
TP14	tp0.9	CAVAL_2.54	Pattern,Single,Row,1,pin,+,ANTELEC,CCM1D
TP15	tp0.9	CAVAL_2.54	Pattern,Single,Row,1,pin,+,ANTELEC,CCM1D
TP16	tp0.9	CAVAL_2.54	Pattern,Single,Row,1,pin,+,ANTELEC,CCM1D

PUBLIC

TP17	tp0.9	CAVAL_2.54	Pattern,Single,Row,1,pin,+,ANTELEC,CCM1D
TP18	tp0.9	CAVAL_2.54	Pattern,Single,Row,1,pin,+,ANTELEC,CCM1D
TP19	tp0.9	CAVAL_2.54	Pattern,Single,Row,1,pin,+,ANTELEC,CCM1D
TP20	tp0.9	CAVAL_2.54	Pattern,Single,Row,1,pin,+,ANTELEC,CCM1D
TP21	tp0.9	CAVAL_2.54	Pattern,Single,Row,1,pin,+,ANTELEC,CCM1D
TP22	tp0.9	CAVAL_2.54	Pattern,Single,Row,1,pin,+,ANTELEC,CCM1D
TP23	tp0.9	CAVAL_2.54	Pattern,Single,Row,1,pin,+,ANTELEC,CCM1D
TP24	tp0.9	CAVAL_2.54	Pattern,Single,Row,1,pin,+,ANTELEC,CCM1D
TP25	tp0.9	CAVAL_2.54	Pattern,Single,Row,1,pin,+,ANTELEC,CCM1D
TP26	tp0.9	CAVAL_2.54	Pattern,Single,Row,1,pin,+,ANTELEC,CCM1D
TP27	tp0.9	CAVAL_2.54	Pattern,Single,Row,1,pin,+,ANTELEC,CCM1D
Y1	tas3225	27.12MHZ	TOKYO-DENPA:TAS-3225A,Type,Quartz,Crystal,SMD

PUBLIC

4. PN532 demoboard description (PCB1647-2)

PCB1647-2 is a reference design for PN532 IC. There are minor changes compared to PCB1647-1.

The interface with the host controller is a high speed UART (HSU).

The demoboard PCB is split into 4 parts:

- The interface and power supply part
- The main part (containing PN532 IC)
- The antenna matching components part
- The antenna itself.

It is possible to break the PCB, for instance to remove the interface and power supply part, in order to connect it to a host controller with a different interface and power sources.

4.1 Possible configurations

This paragraph describes the board configuration for PN532 v1.2 and above versions.

4.1.1 PCB1647-2, HSU, no handshake mode

This is the default configuration of the demoboard. The default serial speed is 115200 bauds.

Table 11. PCB1647-2, HSU, no handshake mode

Strap connected	Strap not connected	Explanation
ST5 ST6	-	Table 7 on page 13
-	ST9	Table 18 on page 36
-	ST7 ST8	Table 17 on page 36
ST12 ST13		Voltage sources connection. The straps could be opened to power the board with another supply than the 5V jack.
-	ST3 ST10	Could be connected to select special modes (cf. UM0502-02 table 1). (not used in standard application mode)
-	ST11	Could be solder to use one single voltage source for VBAT and PVDD, when the interface part of the board has been removed.
-	ST1 ST4	Could be solder to shortcut the regulator.

PUBLIC

4.1.2 PCB1647-2, HSU, handshake mode

Table 12. PCB1647-2, HSU, handshake mode

Strap connected	Strap not connected	Explanation
ST5 ST6	-	Table 7 on page 13
ST9	-	Table 18 on page 36
-	ST7 ST8	Table 17 on page 36
ST12 ST13		Voltage sources connection. The straps could be opened to power the board with another supply than the 5V jack.
-	ST3 ST10	Could be connected to select special modes (cf. UM0502-02 table 1). (not used in standard application mode)
-	ST11	Could be solder to use one single voltage source for VBAT and PVDD, when the interface part of the board has been removed.
-	ST1 ST4	Could be solder to shortcut the regulator.

PUBLIC

4.1.3 PCB1647-2, I2C, no handshake mode

Table 13. PCB1647-2, I2C, no handshake mode

Strap connected	Strap not connected	Explanation
ST6	ST5	Table 7 on page 13
-	ST9	Table 18 on page 36
-	ST7 ST8	Table 17 on page 36
ST12 ST13		Voltage sources connection. The straps could be opened to power the board with another supply than the 5V jack.
-	ST3 ST10	Could be connected to select special modes (cf. UM0502-02 table 1). (not used in standard application mode)
-	ST11	Could be solder to use one single voltage source for VBAT and PVDD, when the interface part of the board has been removed.
-	ST1 ST4	Could be solder to shortcut the regulator.

PUBLIC

4.1.4 PCB1647-2, I2C, handshake mode

Table 14. PCB1647-2, I2C, handshake mode

Strap connected	Strap not connected	Explanation
ST6	ST5	Table 7 on page 13
ST9	-	Table 18 on page 36
-	ST7 ST8	Table 17 on page 36
ST12 ST13		Voltage sources connection. The straps could be opened to power the board with another supply than the 5V jack.
-	ST3 ST10	Could be connected to select special modes (cf. UM0502-02 table 1). (not used in standard application mode)
-	ST11	Could be solder to use one single voltage source for VBAT and PVDD, when the interface part of the board has been removed.
-	ST1 ST4	Could be solder to shortcut the regulator.

PUBLIC

4.1.5 PCB1647-2, SPI, no handshake mode

Table 15. PCB1647-2, SPI, no handshake mode

Strap connected	Strap not connected	Explanation
ST5	ST6	Table 7 on page 13
-	ST9	Table 10 on page 14
-	ST8 ST7	SPI mode 0 (Table 17 on page 36)
ST8	ST7	SPI mode 1 (Table 17 on page 36)
ST7	ST8	SPI mode 2 (Table 17 on page 36)
ST8 ST7	-	SPI mode 3 (Table 17 on page 36)
ST12 ST13		Voltage sources connection. The straps could be opened to power the board with another supply than the 5V jack.
-	ST3 ST10	Could be connected to select special modes (cf. UM0502-02 table 1). (not used in standard application mode)
-	ST11	Could be solder to use one single voltage source for VBAT and PVDD, when the interface part of the board has been removed.
-	ST1 ST4	Could be solder to shortcut the regulator.

PUBLIC

4.1.6 PCB1647-2, SPI, handshake mode

Table 16. PCB1647-2, SPI, no handshake mode

Strap connected	Strap not connected	Explanation
ST5	ST6	Table 7 on page 13
ST9		Table 10 on page 14
-	ST8 ST7	SPI mode 0 (Table 17 on page 36)
ST8	ST7	SPI mode 1 (Table 17 on page 36)
ST7	ST8	SPI mode 2 (Table 17 on page 36)
ST8 ST7	-	SPI mode 3 (Table 17 on page 36)
ST12 ST13		Voltage sources connection. The straps could be opened to power the board with another supply than the 5V jack.
-	ST3 ST10	Could be connected to select special modes (cf. UM0502-02 table 1). (not used in standard application mode)
-	ST11	Could be solder to use one single voltage source for VBAT and PVDD, when the interface part of the board has been removed.
-	ST1 ST4	Could be solder to shortcut the regulator.

PUBLIC

4.2 Power supply

Idem PCB1647-1. See paragraph 3.2, on page 12.

4.3 Interfaces with the host controller

4.3.1 Selection of I2C, SPI or HSU

Idem PCB1647-1. See paragraph 3.3.1, on page 13.

4.3.1.1 Selection of SPI mode

Table 17. SPI mode selection

SPI mode	**P30**	**P33**	**PN532 v1.2, PCB1647-2**	
			Strap connected	**Strap not connected**
Mode 0	1	1		ST8 ST7
Mode 1	0	1	ST8	ST7
Mode 2	1	0	ST7	ST8
Mode 3	0	0	ST8 ST7	

4.3.2 Selection of Handshake mode

Handshake mode is described in the user manual of PN532 (UM0502-01). The handshake mode is selectable via P31. P31 value can be chosen using ST9.

Table 18. Handshake mode or standard mode selection, PCB1647-2

Handshake	**Selection Pin P31** (pin #26)	**Strap connected**	**Strap not connected**
Handshake is selected	0	ST9	
Standard mode	1		ST9

DRAFT DRAFT DRAFT DRAFT DRAFT DRAFT DRAFT DRAFT DRAFT DRAFT DRAFT DRAFT D DRAFT DRAFT DRAFT DRAFT DRAFT DRAFT

4.4 Electrical diagram

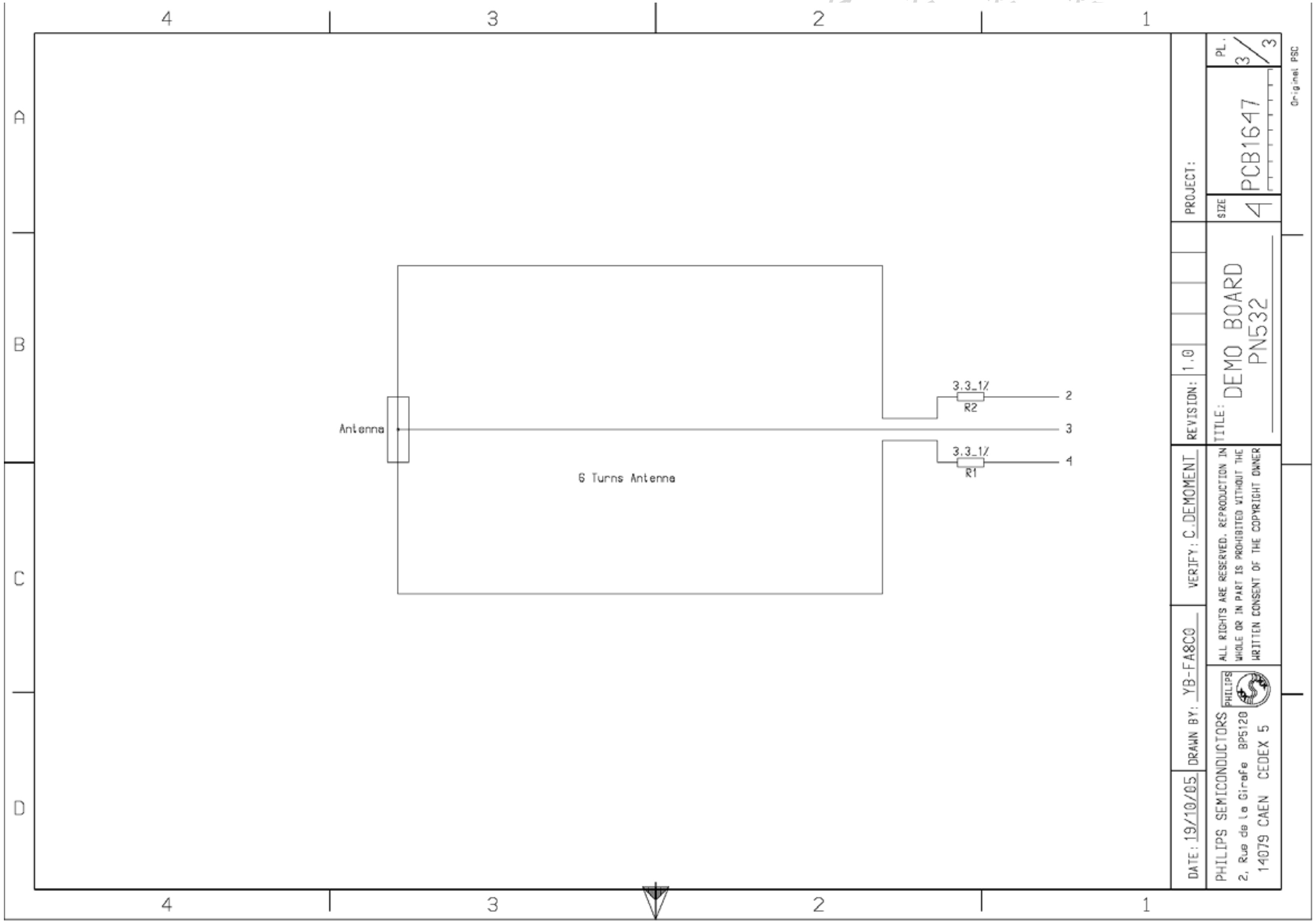
4
3
2
1
A
B
C
D
Antenna
6 Turns Antenna
3.3_1%
R2
3.3_1%
R1
2
3
4
PROJECT:
REVISION: 1.0
VERIFY: C.DEMOMENT
DRAWN BY: YB-FA8C0
DATE: 19/10/05
PL. 3/3
SIZE 4
PCB1647
TITLE: DEMO BOARD PN532
ALL RIGHTS ARE RESERVED. REPRODUCTION IN WHOLE OR IN PART IS PROHIBITED WITHOUT THE WRITTEN CONSENT OF THE COPYRIGHT OWNER
PHILIPS SEMICONDUCTORS
2, Rue de la Girafe BP5120
14079 CAEN CEDEX 5
PHILIPS
Original PSC

Fig 12. Antenna

DRAFT DRAFT DRAFT DRAFT DRAFT DRAFT DRAFT DRAFT DRAFT DRAFT DRAFT D DRAFT DRAFT DRAFT DRAFT

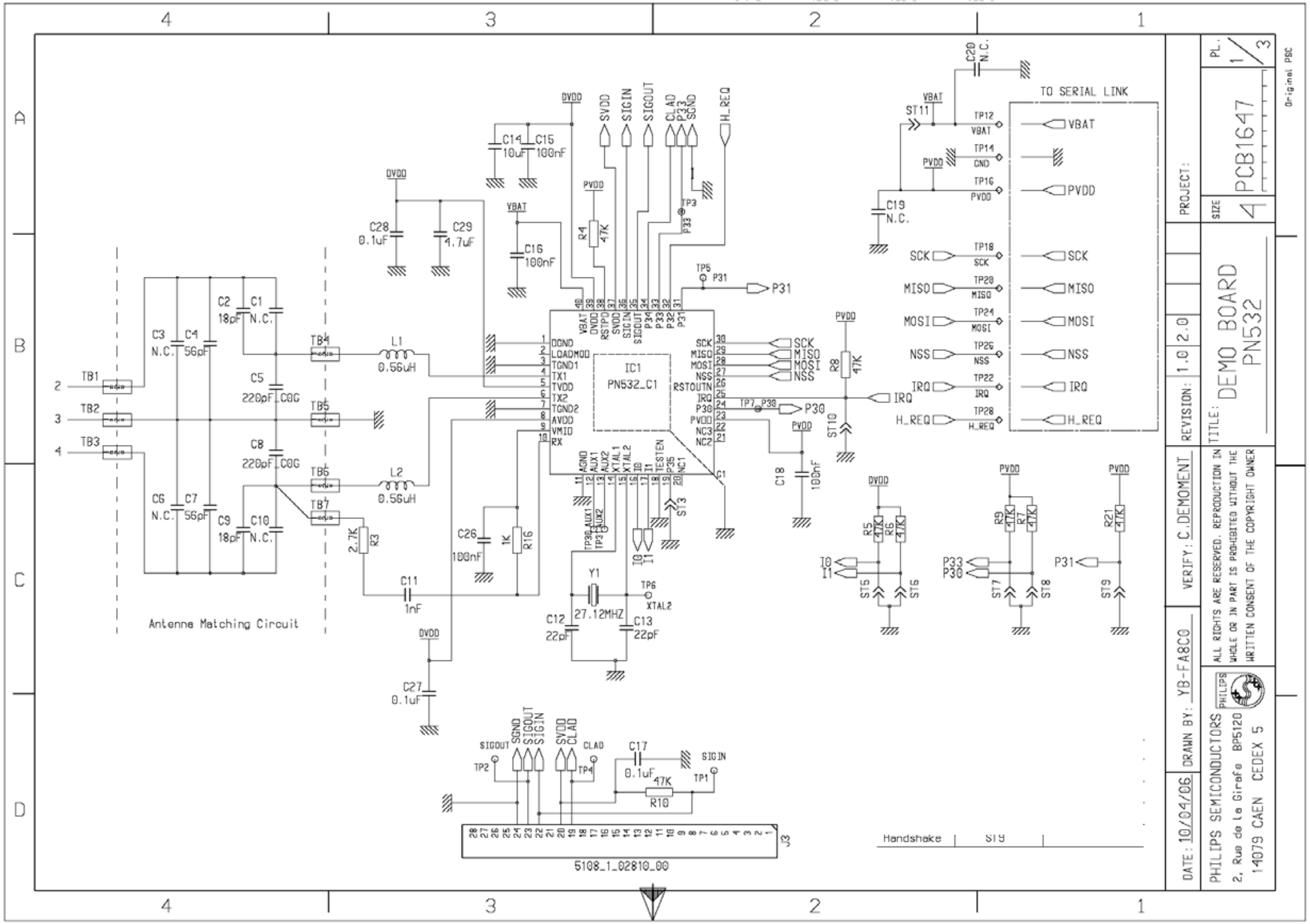
4
3
2
1
A
B
C
D
DVDD
SVDD
SIGIN
SIGOUT
CLAD
P33
SGND
H_REQ
C14
10uF
C15
100nF
C28
0.1uF
C29
4.7uF
VBAT
C16
100nF
PVDD
R4
47K
TP3
P33
TP5
P31
C2
18pF
C1
N.C.
C3
N.C.
C4
56pF
TB4
L1
0.56uH
TB1
TB2
TB3
C5
220pF_C0G
TB5
C8
220pF_C0G
TB6
L2
0.56uH
TB7
C6
N.C.
C7
56pF
C9
18pF
C10
N.C.
2.7K
R3
C26
100nF
1K
R16
C11
1nF
Antenna Matching Circuit
DVDD
C27
0.1uF
IC1
PN532_C1
DGND
LOADMOD
TGND1
TX1
TVDD
TX2
TGND2
AVDD
VMID
RX
SCK
MISO
MOSI
NSS
RSTOUTN
IRQ
P30
PVDD
NC3
NC2
AGND
AUX1
AUX2
XTAL1
XTAL2
I0
I1
TESTEN
P35
NC1
TP7_P30
P30
IRQ
PVDD
R8
47K
ST10
C18
100nF
TP30_AUX1
TP31_AUX2
I0
I1
ST13
Y1
27.12MHZ
TP6
XTAL2
C12
22pF
C13
22pF
C20
N.C.
TO SERIAL LINK
VBAT
ST11
TP12
VBAT
TP14
GND
TP16
PVDD
C19
N.C.
SCK
TP18
MISO
TP20
MOSI
TP24
NSS
TP26
IRQ
TP22
H_REQ
TP28
DVDD
R5
47K
R6
47K
I0
I1
ST5
ST6
PVDD
R9
47K
R7
47K
P33
P30
ST7
ST8
PVDD
R21
47K
P31
ST9
SIGOUT
TP2
SGND
SIGOUT
SIGIN
SVDD
CLAD
TP4
C17
0.1uF
47K
R10
SIGIN
TP1
J3
5108_1_02810_00
Handshake
ST9
PROJECT:
PCB1647
SIZE
4
PL.
1/3
Original PSC
REVISION:
1.0
2.0
TITLE:
DEMO BOARD
PN532
VERIFY: C.DEMOMENT
ALL RIGHTS ARE RESERVED. REPRODUCTION IN WHOLE OR IN PART IS PROHIBITED WITHOUT THE WRITTEN CONSENT OF THE COPYRIGHT OWNER
DRAWN BY: YB-FA8C0
DATE: 10/04/06
PHILIPS SEMICONDUCTORS
2, Rue de la Girafe BP5120
14079 CAEN CEDEX 5

Fig 13. Main board

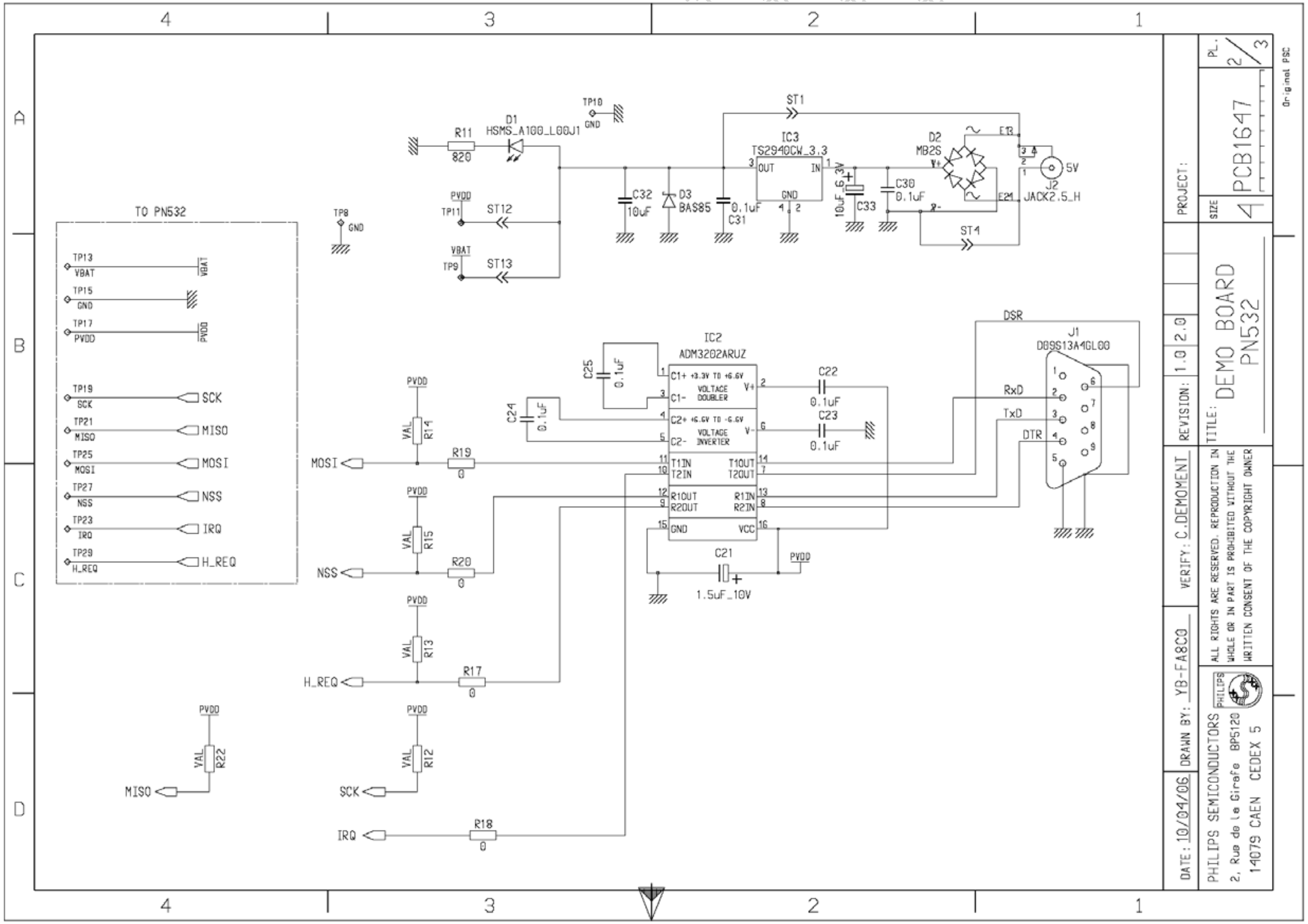
4
3
2
1
A
B
C
D
TO PN532
TP13
VBAT
TP15
GND
TP17
PVDD
TP19
SCK
TP21
MISO
TP25
MOSI
TP27
NSS
TP23
IRQ
TP29
H_REQ
TP8
GND
R11
820
D1
HSMS_A100_L00J1
TP10
GND
PVDD
TP11
ST12
VBAT
TP9
ST13
C32
10uF
D3
BAS85
0.1uF
C31
ST1
IC3
TS2940CW_3.3
OUT
IN
GND
10uF_6.3V
C33
C30
0.1uF
D2
MB2S
E13
E21
5V
J2
JACK2.5_H
ST4
IC2
ADM3202ARUZ
C25
0.1uF
C24
0.1uF
C1+
C1-
+3.3V TO +6.6V VOLTAGE DOUBLER
C2+
C2-
+6.6V TO -6.6V VOLTAGE INVERTER
V+
V-
T1IN
T2IN
R1OUT
R2OUT
T1OUT
T2OUT
R1IN
R2IN
GND
VCC
C22
0.1uF
C23
0.1uF
C21
1.5uF_10V
PVDD
DSR
J1
D09S13A4GL00
RxD
TxD
DTR
MOSI
R14
VAL
R19
0
NSS
R15
R20
H_REQ
R13
R17
MISO
R22
SCK
R12
IRQ
R18
PROJECT:
PCB1647
SIZE
A4
PL.
2/3
Original PSC
TITLE:
DEMO BOARD
PN532
REVISION:
1.0
2.0
VERIFY: C.DEMOMENT
DRAWN BY: YB-FA8C0
DATE: 10/04/06
ALL RIGHTS ARE RESERVED. REPRODUCTION IN WHOLE OR IN PART IS PROHIBITED WITHOUT THE WRITTEN CONSENT OF THE COPYRIGHT OWNER
PHILIPS SEMICONDUCTORS
2, Rue de la Girafe BP5120
14079 CAEN CEDEX 5

Fig 14. Interface and power supply

DRAFT DRAFT DRAFT DRAFT DRAFT DRAFT DRAFT DRAFT DRAFT DRAFT DRAFT DRAFT DRAFT DRAFT DRAFT D DRAFT DRAFT DR

4.5 Layout

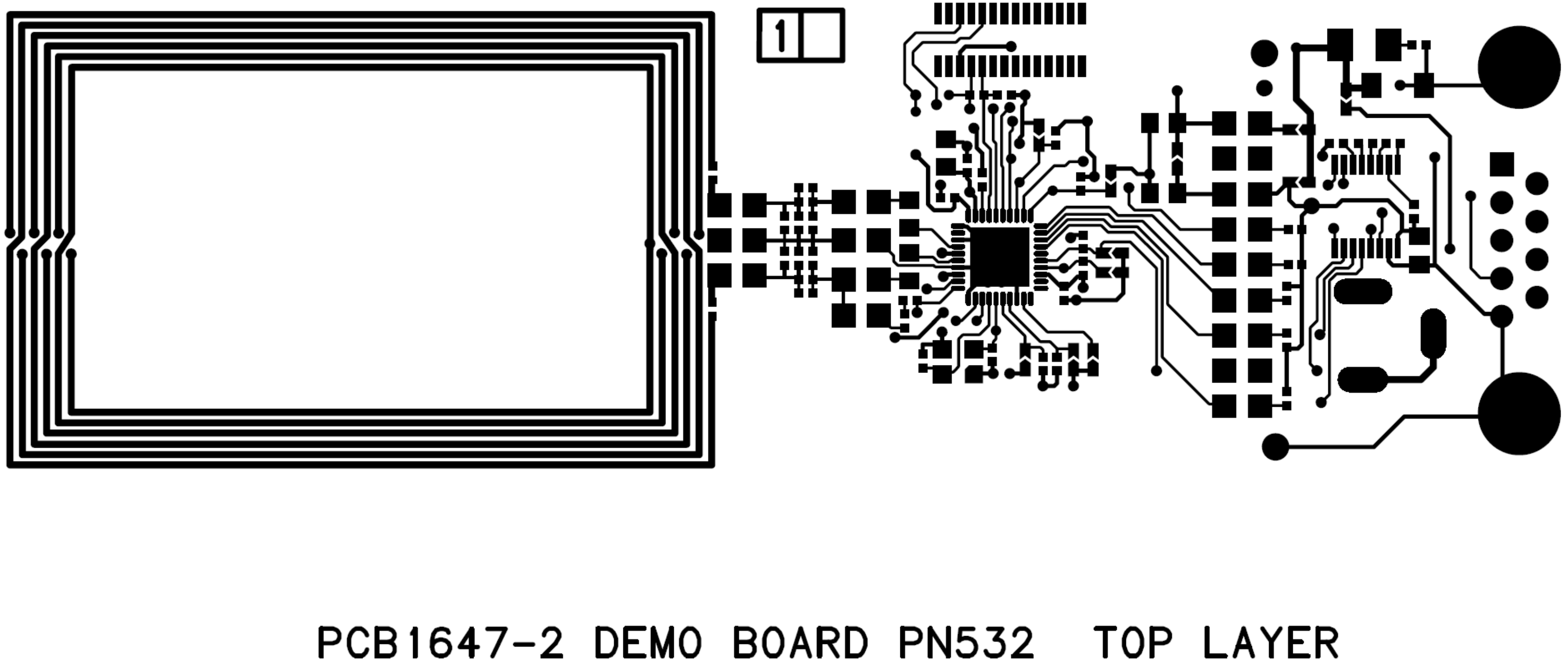
1
PCB1647-2 DEMO BOARD PN532 TOP LAYER

Fig 15. Film 1

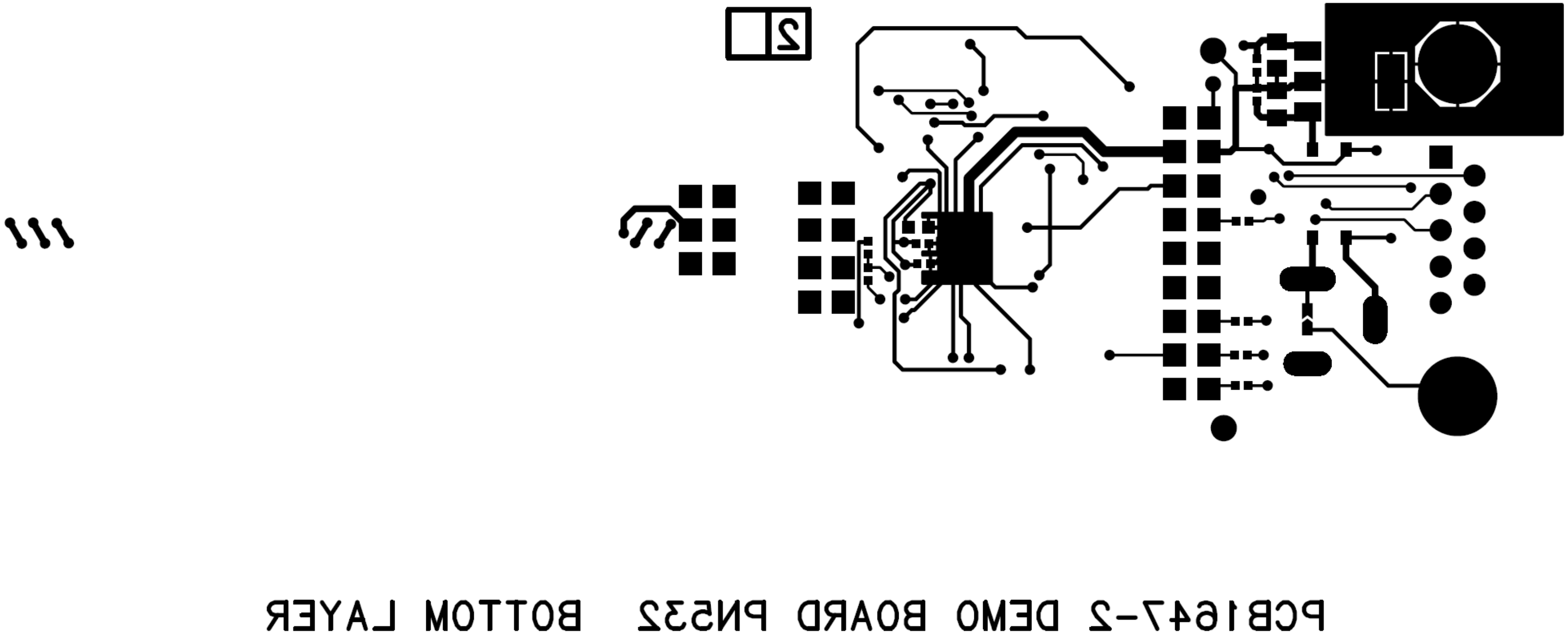
2
PCB1647-2 DEMO BOARD PN532 BOTTOM LAYER

Fig 16. Film 2

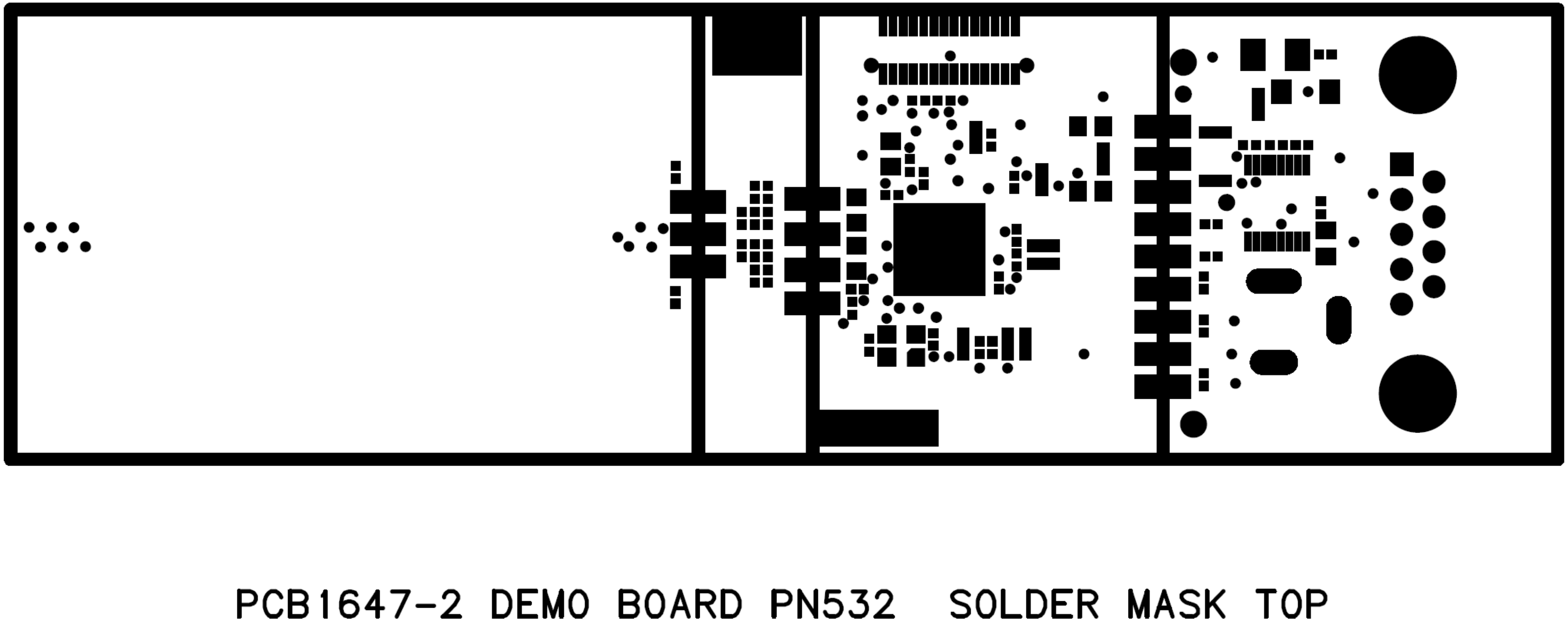
PCB1647-2 DEMO BOARD PN532 SOLDER MASK TOP

Fig 17. film 3

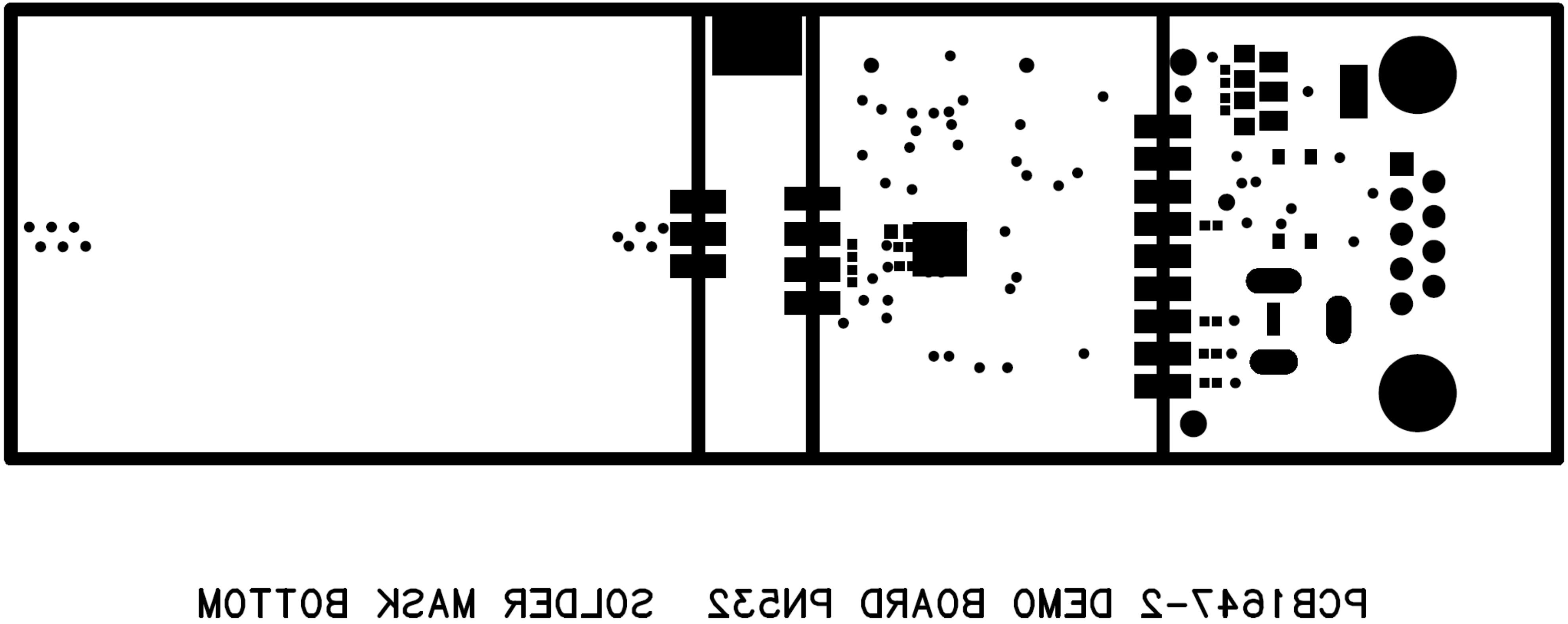
PCB1647-2 DEMO BOARD PN532 SOLDER MASK BOTTOM

Fig 18. Film 4

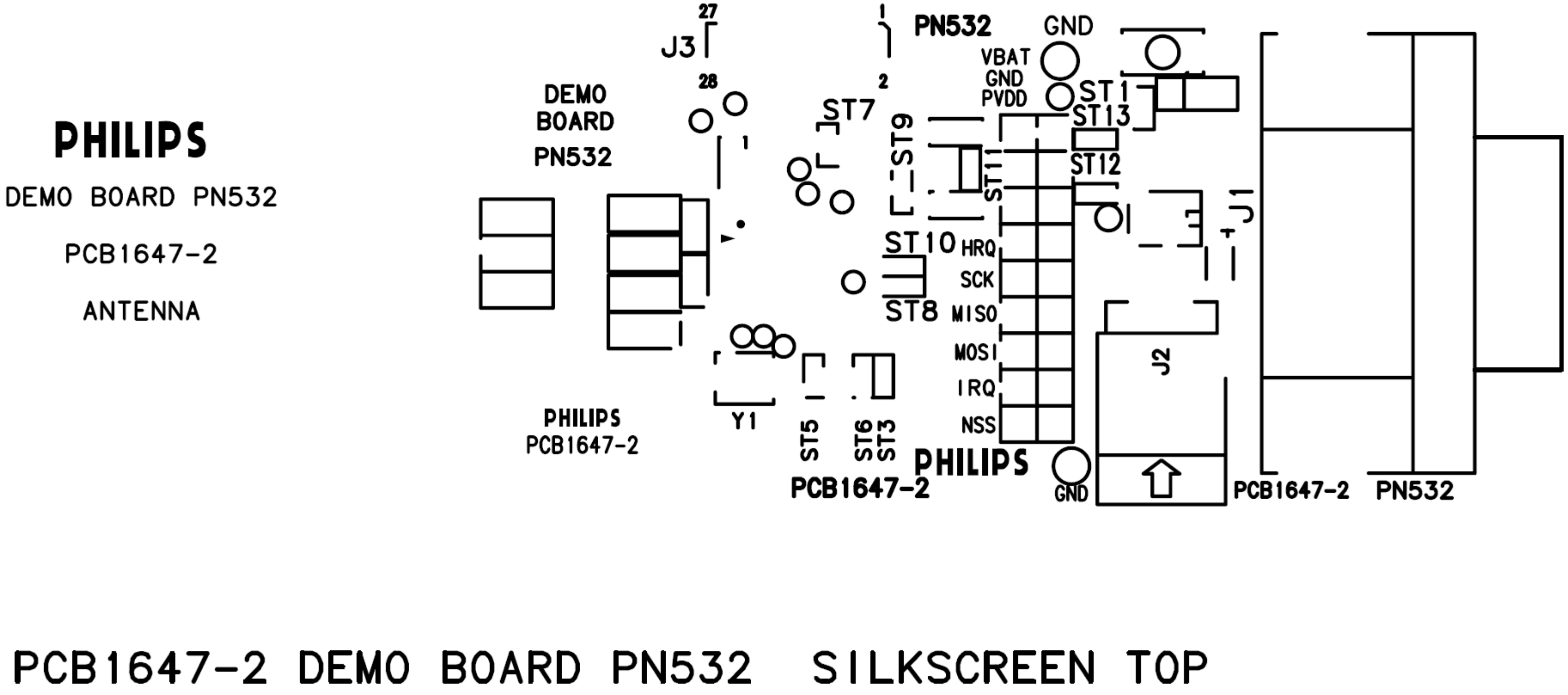
PHILIPS
DEMO BOARD PN532
PCB1647-2
ANTENNA
DEMO
BOARD
PN532
PHILIPS
PCB1647-2
J3
27
28
Y1
ST7
ST9
ST5
ST6
ST3
2
PN532
GND
VBAT
GND
PVDD
ST1
ST13
ST11
ST12
ST10
HRQ
SCK
ST8
MISO
MOSI
IRQ
NSS
PHILIPS
PCB1647-2
GND
J1
J2
PCB1647-2
PN532
PCB1647-2 DEMO BOARD PN532 SILKSCREEN TOP

Fig 19. Film 5

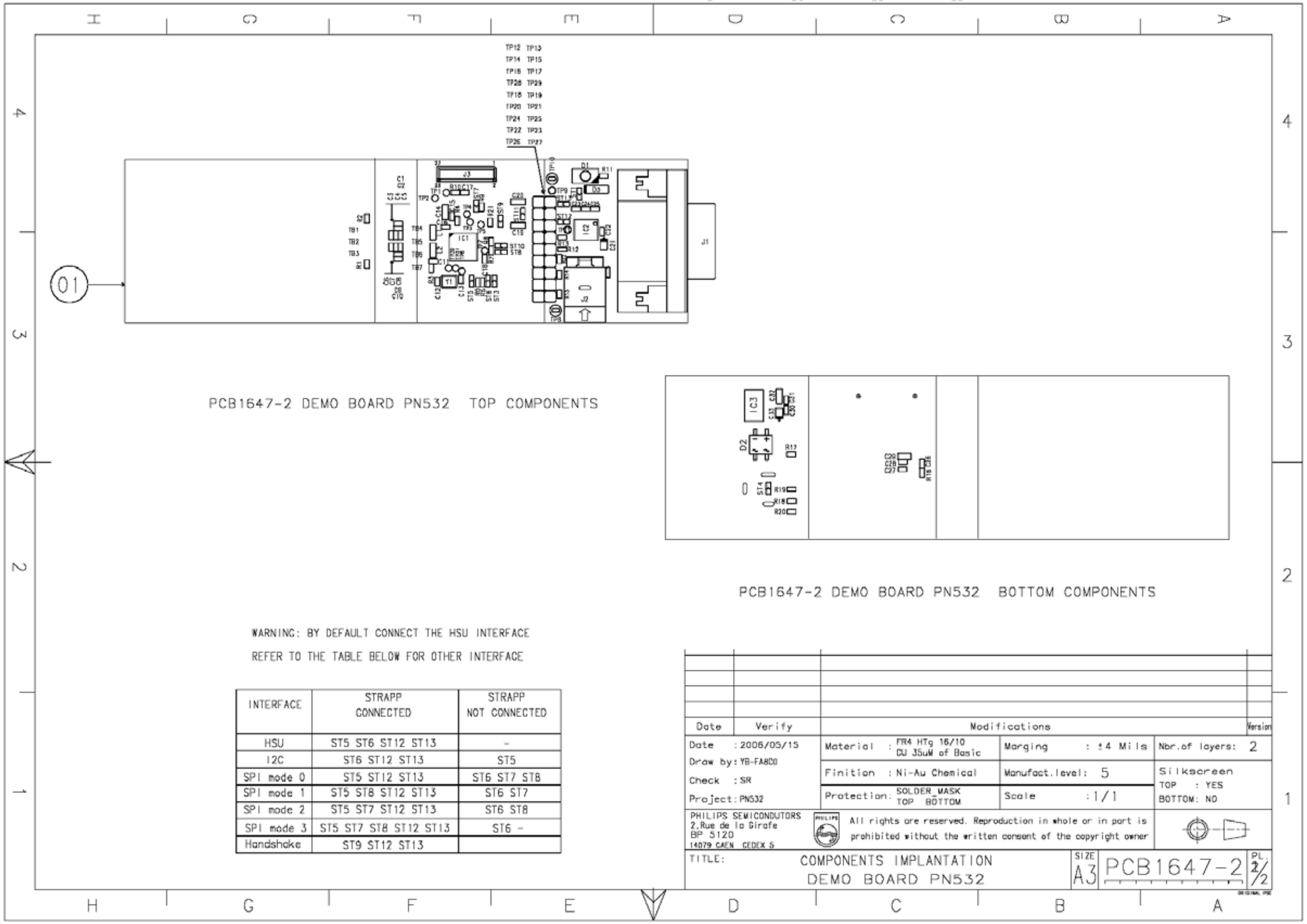

PCB1647-2 DEMO BOARD PN532 TOP COMPONENTS

PCB1647-2 DEMO BOARD PN532 BOTTOM COMPONENTS

WARNING: BY DEFAULT CONNECT THE HSU INTERFACE

REFER TO THE TABLE BELOW FOR OTHER INTERFACE

INTERFACE	STRAPP CONNECTED	STRAPP NOT CONNECTED
HSU	ST5 ST6 ST12 ST13	-
I2C	ST6 ST12 ST13	ST5
SPI mode 0	ST5 ST12 ST13	ST6 ST7 ST8
SPI mode 1	ST5 ST8 ST12 ST13	ST6 ST7
SPI mode 2	ST5 ST7 ST12 ST13	ST6 ST8
SPI mode 3	ST5 ST7 ST8 ST12 ST13	ST6 -
Handshake	ST9 ST12 ST13	

Date	Verify	Modifications	Version

Date : 2006/05/15
Draw by: YB-FA8C0
Check : SR
Project: PN532

Material : FR4 HTg 16/10 CU 35uM of Basic
Marging : ±4 Mils
Nbr.of layers: 2
Finition : Ni-Au Chemical
Manufact.level: 5
Silkscreen TOP : YES BOTTOM: NO
Protection: SOLDER_MASK TOP BOTTOM
Scale : 1/1

PHILIPS SEMICONDUTORS
2,Rue de la Girafe
BP 5120
14079 CAEN CEDEX 5

All rights are reserved. Reproduction in whole or in part is prohibited without the written consent of the copyright owner

TITLE: COMPONENTS IMPLANTATION
DEMO BOARD PN532

SIZE A3 PCB1647-2 PL. 2/2

Fig 20. Film 6

4.6 Components list

REFERENCE	GEOMETRY	VALUE	DESCRIPTION
C1	c0402	N.C.,	Capacitor,CER2,0402,***NOT,CONNECTED***
C2	c0402	18pF,	Capacitor,CER2,0402,C0G,50V,5%
C3	c0402	N.C.,	Capacitor,CER2,0402,***NOT,CONNECTED***
C4	c0402	56pF,	Capacitor,CER2,0402,C0G,50V,5%
C5	c0402	220pF_C0G,	Capacitor,CER2,0402,C0G,50V,GPR15_5C_1H_221
C6	c0402	N.C.,	Capacitor,CER2,0402,***NOT,CONNECTED***
C7	c0402	56pF,	Capacitor,CER2,0402,C0G,50V,5%
C8	c0402	220pF_C0G,	Capacitor,CER2,0402,C0G,50V,GPR15_5C_1H_221
C9	c0402	18pF,	Capacitor,CER2,0402,C0G,50V,5%
C10	c0402	N.C.,	Capacitor,CER2,0402,***NOT,CONNECTED***
C11	c0402	1nF,	Capacitor,CER2,0402,X7R,50V,10%
C12	c0402	22pF,	Capacitor,CER2,0402,C0G,50V,5%
C13	c0402	22pF,	Capacitor,CER2,0402,C0G,50V,5%
C14	c0805	10uF,	Capacitor,CER2,0805,X5R,6.3V,10%
C15	c0402	100nF,	Capacitor,CER2,0402,X7R,10V,10%
C16	c0402	100nF,	Capacitor,CER2,0402,X7R,10V,10%
C17	c0402	0.1uF,	Capacitor,CER2,0402,X7R,16V,-10+10%,PDC
C18	c0402	100nF,	Capacitor,CER2,0402,X7R,10V,10%
C19	c0805	N.C.,	Capacitor,CER2,0805,***NOT,CONNECTED***
C20	c0805	N.C.,	Capacitor,CER2,0805,***NOT,CONNECTED***

DRAFT
PUBLIC

C21	taj_r	1.5uF_10V,	AVX:TAJR155K010,Tantal,Capacitor,Package:R,10%
C22	c0402	0.1uF,	Capacitor,CER2,0402,X7R,16V,-10+10%,PDC
C23	c0402	0.1uF,	Capacitor,CER2,0402,X7R,16V,-10+10%,PDC
C24	c0402	0.1uF,	Capacitor,CER2,0402,X7R,16V,-10+10%,PDC
C25	c0402	0.1uF,	Capacitor,CER2,0402,X7R,16V,-10+10%,PDC
C26	c0402	100nF,	Capacitor,CER2,0402,Y5V,16V,-20+80%
C27	c0402	0.1uF,	Capacitor,CER2,0402,X7R,16V,-10+10%,PDC
C28	c0402	0.1uF,	Capacitor,CER2,0402,X7R,16V,-10+10%,PDC
C29	c0603	4.7uF,	Capacitor,CER2,0603,X5R,6.3V,10%
C30	c0402	0.1uF,	Capacitor,CER2,0402,X7R,16V,-10+10%,PDC
C31	c0402	0.1uF,	Capacitor,CER2,0402,X7R,16V,-10+10%,PDC
C32	c0805	10uF,	Capacitor,CER2,0805,X5R,6.3V,10%
C33	taj_r	10uF_6.3V,	AVX:TAJR106K006,Tantal,Capacitor,Package:R,10%
D1	topled	HSMS_A100_L00J1,	AGILENT:Red,LED,Topled,30mA
D2	to269aa	MB2S,	GENERAL_SEMICONDUTOR:SMD,Bridge,Rectifier,200V,0.5A
D3	sod80	BAS85,	PHILIPS:Schottky,Barrier,Diode,30V,0.2A,
IC1	mlf6x40_0.5	PN532_C1,	PHILIPS:Package:HVQFN40
IC2	sot403_1	ADM3202ARUZ,	ANALOG-DEVICES:Low,Power,3.3V,RS232,Line-Driver,Receiver,Package:TSSOP16
IC3	sot223	TS2940CW_3.3,	TSC:Ultra-Low,Dropout,Fixed,Positive,voltage,Regulator,3.3V,1A,SOT223
J1	subd_09fc	D09S13A4GL00,	FCI:Delta-D,Connector,Right-Angle,Female,Norm,HE5
J2	jack2.5_h	JACK2.5_H,	CLIFF:DC10B,Power,Connector,Horizontal,2.5mm
J3	5108_2x14s_0.8md	5108_1_02810_00,	WP-PRODUCTS:5108,Serie,SMT,Connector,Straight,Male,2x14pins,0.8mm
L1	self_mlf2012	0.56uH,	TDK:MLF2012DR56K,Chip,Inductor,SMD,0.15A,10%
L2	self_mlf2012	0.56uH,	TDK:MLF2012DR56K,Chip,Inductor,SMD,0.15A,10%
R1	r0402	3.3_1%,	Resistor,Package:0402,1%,1/16W
R2	r0402	3.3_1%,	Resistor,Package:0402,1%,1/16W

R3	r0402	2.7K,	Resistor,Package:0402,5%,1/16W
R4	r0402	47K,	Resistor,Package:0402,5%,1/16W
R5	r0402	47K,	Resistor,Package:0402,5%,1/16W
R6	r0402	47K,	Resistor,Package:0402,5%,1/16W
R7	r0402	47K,	Resistor,Package:0402,5%,1/16W
R8	r0402	47K,	Resistor,Package:0402,5%,1/16W
R9	r0402	47K,	Resistor,Package:0402,5%,1/16W
R10	r0402	47K,	Resistor,Package:0402,5%,1/16W
R11	r0402	820,	Resistor,Package:0402,5%,1/16W
R12	r0402	VAL,	Resistor,Package:0402,***TO,BE,DEFINE***
R13	r0402	VAL,	Resistor,Package:0402,***TO,BE,DEFINE***
R14	r0402	VAL,	Resistor,Package:0402,***TO,BE,DEFINE***
R15	r0402	VAL,	Resistor,Package:0402,***TO,BE,DEFINE***
R16	r0402	1K,	Resistor,Package:0402,5%,1/16W
R17	r0402	0,	Resistor,Package:0402,5%,1/16W
R18	r0402	0,	Resistor,Package:0402,5%,1/16W
R19	r0402	0,	Resistor,Package:0402,5%,1/16W
R20	r0402	0,	Resistor,Package:0402,5%,1/16W
R21	r0402	47K,	Resistor,Package:0402,5%,1/16W
R22	r0402	VAL,	Resistor,Package:0402,***TO,BE,DEFINE***
ST1	chevron_a	CHEVRON,	***NOT,CONNECTED***
ST3	chevron_a	CHEVRON,	***NOT,CONNECTED***
ST4	chevron_a	CHEVRON,	***NOT,CONNECTED***
ST5	chevron_a	CHEVRON,	***NOT,CONNECTED***
ST6	chevron_a	CHEVRON,	***NOT,CONNECTED***
ST7	chevron_a	CHEVRON,	***NOT,CONNECTED***

DRAFT
PUBLIC

ST8	chevron_a	CHEVRON,	***NOT,CONNECTED***
ST9	chevron_a	CHEVRON,	***NOT,CONNECTED***
ST10	chevron_a	CHEVRON,	***NOT,CONNECTED***
ST11	chevron_a	CHEVRON,	***NOT,CONNECTED***
ST12	chevron_a	CHEVRON,	***NOT,CONNECTED***
ST13	chevron_a	CHEVRON,	***NOT,CONNECTED***
TB1	bar2sp	CAVAL_2.54,	Pattern,Single,Row,2,pin,+,ANTELEC,CCM1D
TB2	bar2sp	CAVAL_2.54,	Pattern,Single,Row,2,pin,+,ANTELEC,CCM1D
TB3	bar2sp	CAVAL_2.54,	Pattern,Single,Row,2,pin,+,ANTELEC,CCM1D
TB4	bar2sp	CAVAL_2.54,	Pattern,Single,Row,2,pin,+,ANTELEC,CCM1D
TB5	bar2sp	CAVAL_2.54,	Pattern,Single,Row,2,pin,+,ANTELEC,CCM1D
TB6	bar2sp	CAVAL_2.54,	Pattern,Single,Row,2,pin,+,ANTELEC,CCM1D
TB7	bar2sp	CAVAL_2.54,	Pattern,Single,Row,2,pin,+,ANTELEC,CCM1D
TP1	plage.75	PLAGE.75,	***NOT,CONNECTED***
TP2	plage.75	PLAGE.75,	***NOT,CONNECTED***
TP3	plage.75	PLAGE.75,	***NOT,CONNECTED***
TP4	plage.75	PLAGE.75,	***NOT,CONNECTED***
TP5	plage.75	PLAGE.75,	***NOT,CONNECTED***
TP6	plage.75	PLAGE.75,	***NOT,CONNECTED***
TP7	plage.75	PLAGE.75,	***NOT,CONNECTED***
TP8	tpboucle1.0	5001,	KEYSTONE:Black,Testpoint,Type1
TP10	tpboucle1.0	5001,	KEYSTONE:Black,Testpoint,Type1
TP12	tp0.9	CAVAL_2.54,	Pattern,Single,Row,1,pin,+,ANTELEC,CCM1D
TP13	tp0.9	CAVAL_2.54,	Pattern,Single,Row,1,pin,+,ANTELEC,CCM1D
TP14	tp0.9	CAVAL_2.54,	Pattern,Single,Row,1,pin,+,ANTELEC,CCM1D
TP15	tp0.9	CAVAL_2.54,	Pattern,Single,Row,1,pin,+,ANTELEC,CCM1D

TP16	tp0.9	CAVAL_2.54,	Pattern,Single,Row,1,pin,+,ANTELEC,CCM1D
TP17	tp0.9	CAVAL_2.54,	Pattern,Single,Row,1,pin,+,ANTELEC,CCM1D
TP18	tp0.9	CAVAL_2.54,	Pattern,Single,Row,1,pin,+,ANTELEC,CCM1D
TP19	tp0.9	CAVAL_2.54,	Pattern,Single,Row,1,pin,+,ANTELEC,CCM1D
TP20	tp0.9	CAVAL_2.54,	Pattern,Single,Row,1,pin,+,ANTELEC,CCM1D
TP21	tp0.9	CAVAL_2.54,	Pattern,Single,Row,1,pin,+,ANTELEC,CCM1D
TP22	tp0.9	CAVAL_2.54,	Pattern,Single,Row,1,pin,+,ANTELEC,CCM1D
TP23	tp0.9	CAVAL_2.54,	Pattern,Single,Row,1,pin,+,ANTELEC,CCM1D
TP24	tp0.9	CAVAL_2.54,	Pattern,Single,Row,1,pin,+,ANTELEC,CCM1D
TP25	tp0.9	CAVAL_2.54,	Pattern,Single,Row,1,pin,+,ANTELEC,CCM1D
TP26	tp0.9	CAVAL_2.54,	Pattern,Single,Row,1,pin,+,ANTELEC,CCM1D
TP27	tp0.9	CAVAL_2.54,	Pattern,Single,Row,1,pin,+,ANTELEC,CCM1D
TP28	tp0.9	CAVAL_2.54,	Pattern,Single,Row,1,pin,+,ANTELEC,CCM1D
TP29	tp0.9	CAVAL_2.54,	Pattern,Single,Row,1,pin,+,ANTELEC,CCM1D
TP30	plage.75	PLAGE.75,	***NOT,CONNECTED***
TP31	plage.75	PLAGE.75,	***NOT,CONNECTED***
Y1	tas3225	27.12MHZ,	TOKYO-DENPA:TAS-3225A,Type,Quartz,Crystal,SMD

5. Annex: PN532 v1.0

5.1 PCB1647-1, HSU, no handshake mode, PN532 v1.0

Same than PN532 v1.0, see Table 1.

5.2 PCB1647-1, HSU, handshake mode, PN532 v1.0

Same than PN532 v1.2, see Table 2

5.3 PCB1647-1, I2C, no handshake mode, PN532 v1.0

Same than PN532 v1.2, see Table 3

5.4 PCB1647-1, I2C, handshake mode, PN532 v1.0

Same than PN532 v1.2, see Table 4

PUBLIC

DRAFT DRAFT DRAFT DRAFT PUBLIC

5.5 PCB1647-1, SPI, no handshake mode, PN532 v1.0

SPI mode selection is different between PN532 v1.0 and PN532 v1.2. PN532 v1.0 uses P30 and P31 whereas PN532 v1.2 uses P30 and P33. This is because P31 is used to select handshake mode.

PN532 v1.0

- Handshake mode selectable with P31, for I2C and HSU interface.
- No handshake mode possible in SPI
- SPI mode selectable with P31 and P30

The following table sums up the straps to solder or not. The two other tables show the relation between the straps and the functionality.

Table 19. PCB1647-1, SPI, no handshake mode, PN532 v1.0

Strap connected	Strap not connected	Explanation
ST5	ST6	Table 7 on page 13
-	ST4	Table 21 on page 53
ST2	-	Table 21 on page 53
-	ST7 ST8	SPI mode 0 (Table 20 on page 53)
ST8	ST7	SPI mode 1 (Table 20 on page 53)
ST7	ST8	SPI mode 2 (Table 20 on page 53)
ST7 ST8	-	SPI mode 3 (Table 20 on page 53)
ST12 ST13		Voltage sources connection. The straps could be opened to power the board with another supply than the 5V jack.
-	ST3 ST10	Could be connected to select special modes (cf. UM0502-02 table 1). (not used in standard application mode)
-	ST11	Could be solder to use one single voltage source for VBAT and PVDD, when the interface part of the board has been removed.
-	ST1	Could be solder to shortcut the regulator.

DRAFT

Table 20. SPI mode selection

SPI mode	P30	P31 (v1.0)	PN532 v1.0	
			Strap connected	Strap not connected
Mode 0	1	1		ST7 ST8
Mode 1	0	1	ST8	ST7
Mode 2	1	0	ST7	ST8
Mode 3	0	0	ST7 ST8	

Table 21. MISO_OR_H_REQ signal connection

Handshake		MISO_OR_HREQ	PN532 v1.0	
		PN532 v1.0	Strap connected	Strap not connected
Handshake is selected	HSU I2C	HREQ pin P32 (pin #32)	ST4	ST2
	SPI	N.A.	(Actually N.A)	ST2 ST4 (actually N.A)
Normal mode	HSU I2C	Not used	-	ST4 ST2
	SPI	MISO (pin #29)	ST2	ST4

PUBLIC

Remark on mode SPI, handshake mode, PN532 v1.0:

This mode doesn’t exist. PN532 v1.0 doesn’t provide handshake mode functionality with SPI interface.

DRAFT DRAFT DRAFT DRAFT DRAFT DRAFT PUBLIC

A

6. Legal information

6.1 Definitions

Draft — The document is a draft version only. The content is still under internal review and subject to formal approval, which may result in modifications or additions. Philips Semiconductors does not give any representations or warranties as to the accuracy or completeness of information included herein and shall have no liability for the consequences of use of such information.

6.2 Disclaimers

General — Information in this document is believed to be accurate and reliable. However, Philips Semiconductors does not give any representations or warranties, expressed or implied, as to the accuracy or completeness of such information and shall have no liability for the consequences of use of such information.

Right to make changes — Philips Semiconductors reserves the right to make changes to information published in this document, including without limitation specifications and product descriptions, at any time and without notice. This document supersedes and replaces all information supplied prior to the publication hereof.

Suitability for use — Philips Semiconductors products are not designed, authorized or warranted to be suitable for use in medical, military, aircraft, space or life support equipment, nor in applications where failure or malfunction of a Philips Semiconductors product can reasonably be expected to result in personal injury, death or severe property or environmental damage. Philips Semiconductors accepts no liability for inclusion and/or use of Philips Semiconductors products in such equipment or applications and therefore such inclusion and/or use is for the customer's own risk.

Applications — Applications that are described herein for any of these products are for illustrative purposes only. Philips Semiconductors makes no representation or warranty that such applications will be suitable for the specified use without further testing or modification.

6.3 Licenses

Purchase of Philips RC5 components

Purchase of Philips RC5 components conveys a license under the Philips RC5 patent to use the components in RC5 system products conforming to the RC5 standard UATM-5000 for allocation of remote control commands defined by Koninklijke Philips Electronics N.V.

6.4 Patents

Notice is herewith given that the subject device uses one or more of the following patents and that each of these patents may have corresponding patents in other jurisdictions.

<Patent ID> — owned by <Company name>

6.5 Trademarks

Notice: All referenced brands, product names, service names and trademarks are property of their respective owners.

<Name> — is a trademark of Koninklijke Philips Electronics N.V.

PUBLIC