Algorithms and Analysis

Lesson 16: *Sort Wisely*

Merge sort, quick sort and radix sort

Outline

1. **Merge Sort**
2. Quick Sort
3. Radix Sort

Merge Sort

- Merge sort is an example of sort performed in log-linear (i.e. $O(n\log(n))$) time complexity
- It was invented in 1945 by John von Neumann
- It is an example of a divide-and-conquer strategy
  - ⋆ That is, the problem is divided into a number of parts recursively
  - ⋆ The full solution is obtained by recombining the parts

Merge Sort

- Merge sort is an example of sort performed in log-linear (i.e. $O(n\log(n))$) time complexity
- It was invented in 1945 by John von Neumann
- It is an example of a divide-and-conquer strategy
  - ⋆ That is, the problem is divided into a number of parts recursively
  - ⋆ The full solution is obtained by recombining the parts

Merge Sort

- Merge sort is an example of sort performed in log-linear (i.e. $O(n\log(n))$) time complexity
- It was invented in 1945 by John von Neumann
- It is an example of a divide-and-conquer strategy
  - ⋆ That is, the problem is divided into a number of parts recursively
  - ⋆ The full solution is obtained by recombining the parts

Merge Sort

- Merge sort is an example of sort performed in log-linear (i.e. $O(n\log(n))$) time complexity
- It was invented in 1945 by John von Neumann
- It is an example of a divide-and-conquer strategy
  - ⋆ That is, the problem is divided into a number of parts recursively
  - ⋆ The full solution is obtained by recombining the parts

Merge Sort

- Merge sort is an example of sort performed in log-linear (i.e. $O(n\log(n))$) time complexity
- It was invented in 1945 by John von Neumann
- It is an example of a divide-and-conquer strategy
  - ⋆ That is, the problem is divided into a number of parts recursively
  - ⋆ The full solution is obtained by recombining the parts

Algorithm

```
MergeSort(a)
{
  if n > 1
    copy a[1 : ⌊n/2⌋] to b
    copy a[⌊n/2⌋ + 1 : n] to c
    MergeSort(b)
    MergeSort(c)
    Merge(b, c, a)
  endif
}
```

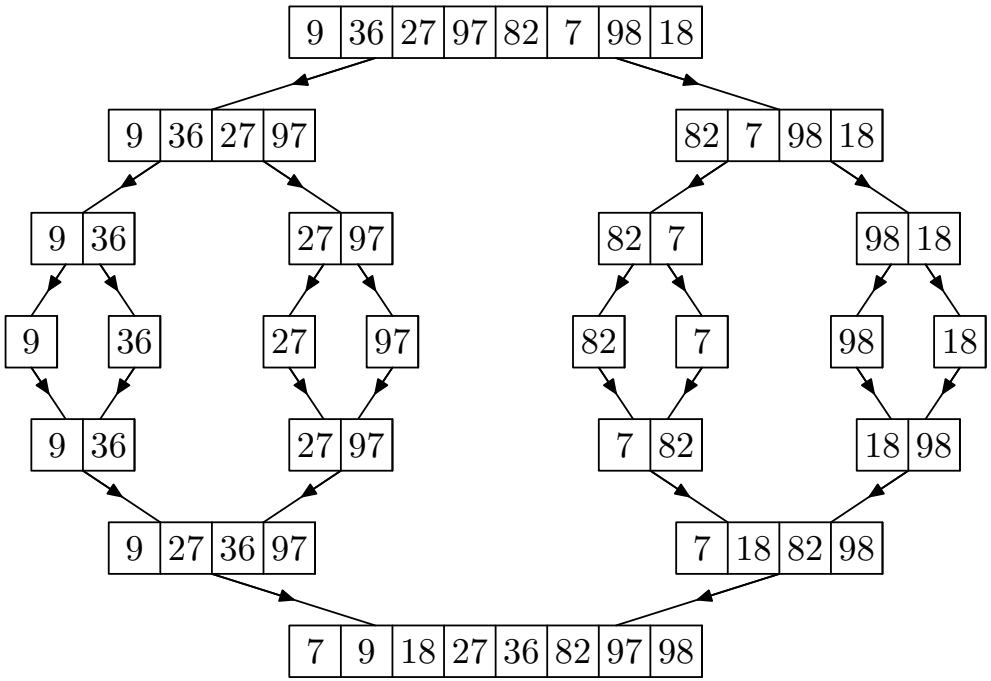

Merge

```
MERGE(b[1 : p], c[1 : q], a[1 : p + q])
{
  i←1
  j←1
  k←1
  while i ≤ p  and j ≤ q  do
    if b_i ≤ c_j
      a_k ←b_i
      i ←i+1
    else
      a_k ←c_j
      j ←j+1
    endif
    k ←k+1
  end
  if i=p
    copy c[j : q]  to a[k : p + q]
  else
    copy c[i : q]  to a[k : p + q]
}
```

Merge

```
MERGE(b[1 : p], c[1 : q], a[1 : p + q])
{
  i←1
  j←1
  k←1
  while i ≤ p  and j ≤ q  do
    if b_i ≤ c_j
      a_k ←b_i
      i ←i+1
    else
      a_k ←c_j
      j ←j+1
    endif
    k ←k+1
  end
  if i=p
    copy c[j : q]  to a[k : p + q]
  else
    copy c[i : q]  to a[k : p + q]
}
```

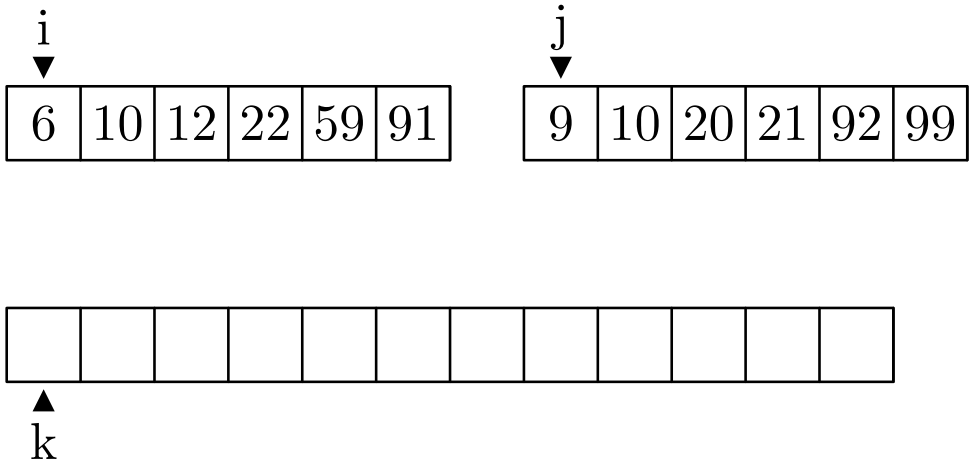

Merge

```
MERGE(b[1 : p], c[1 : q], a[1 : p + q])
{
  i←1
  j←1
  k←1
  while i ≤ p  and j ≤ q  do
    if b_i ≤ c_j
      a_k ←b_i
      i ←i+1
    else
      a_k ←c_j
      j ←j+1
    endif
    k ←k+1
  end
  if i=p
    copy c[j : q]  to a[k : p + q]
  else
    copy c[i : q]  to a[k : p + q]
}
```

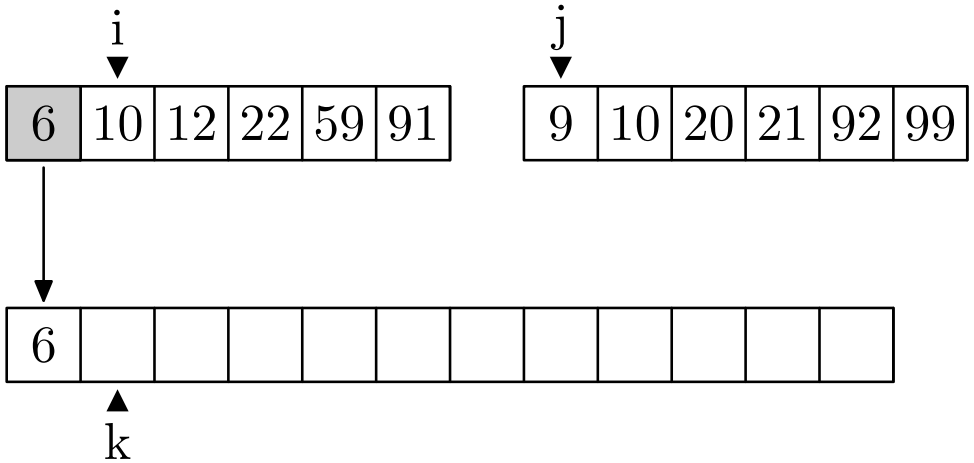

Merge

```
MERGE(b[1 : p], c[1 : q], a[1 : p + q])
{
  i←1
  j←1
  k←1
  while i ≤ p  and j ≤ q  do
    if b_i ≤ c_j
      a_k ←b_i
      i ←i+1
    else
      a_k ←c_j
      j ←j+1
    endif
    k ←k+1
  end
  if i=p
    copy c[j : q]  to a[k : p + q]
  else
    copy c[i : q]  to a[k : p + q]
}
```

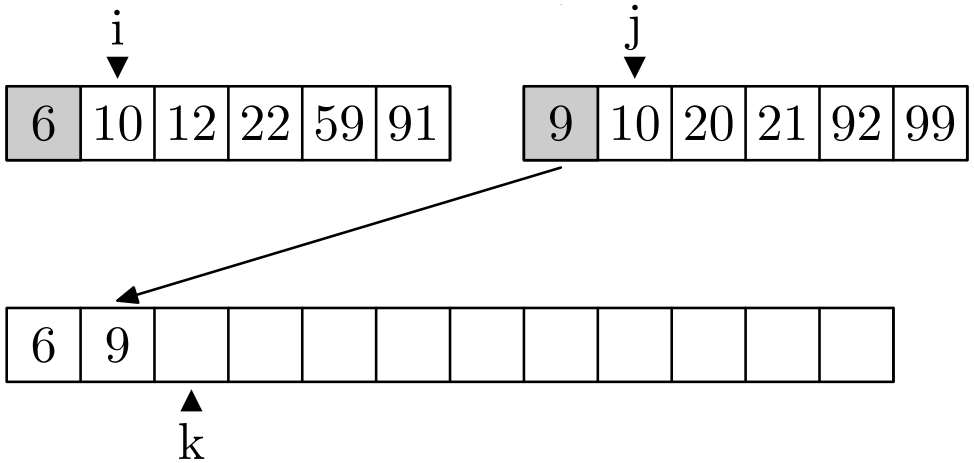

Merge

```
MERGE(b[1 : p], c[1 : q], a[1 : p + q])
{
  i←1
  j←1
  k←1
  while i ≤ p  and j ≤ q  do
    if b_i ≤ c_j
      a_k ←b_i
      i ←i+1
    else
      a_k ←c_j
      j ←j+1
    endif
    k ←k+1
  end
  if i=p
    copy c[j : q]  to a[k : p + q]
  else
    copy c[i : q]  to a[k : p + q]
}
```

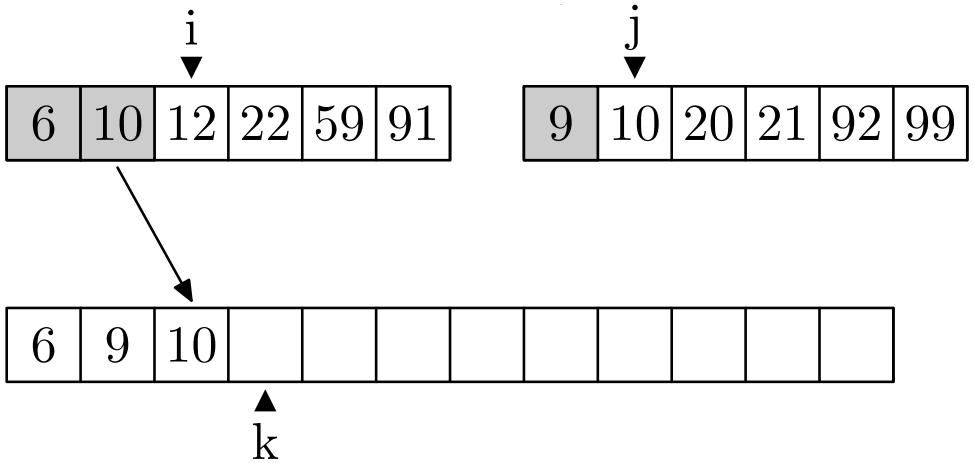

Merge

```
MERGE(b[1 : p], c[1 : q], a[1 : p + q])
{
  i←1
  j←1
  k←1
  while i ≤ p  and j ≤ q  do
    if b_i ≤ c_j
      a_k ←b_i
      i ←i+1
    else
      a_k ←c_j
      j ←j+1
    endif
    k ←k+1
  end
  if i=p
    copy c[j : q]  to a[k : p + q]
  else
    copy c[i : q]  to a[k : p + q]
}
```

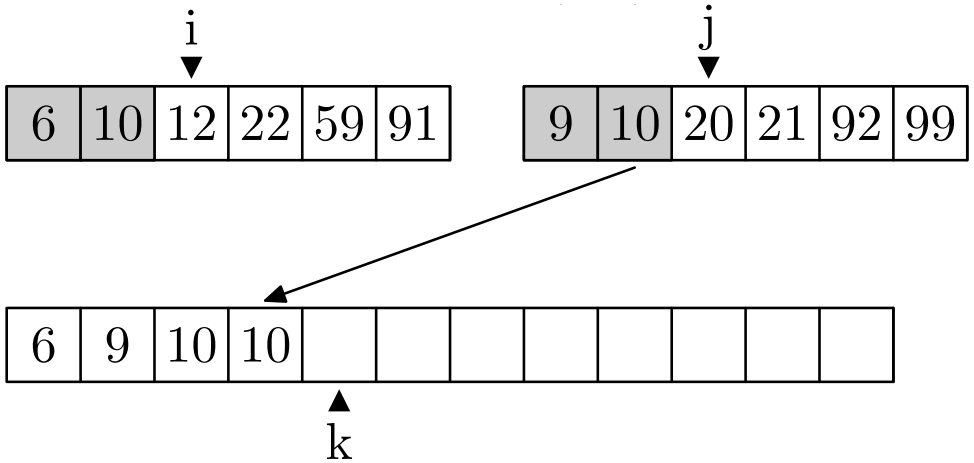

Merge

```
MERGE(b[1 : p], c[1 : q], a[1 : p + q])
{
  i←1
  j←1
  k←1
  while i ≤ p  and j ≤ q  do
    if b_i ≤ c_j
      a_k ←b_i
      i ←i+1
    else
      a_k ←c_j
      j ←j+1
    endif
    k ←k+1
  end
  if i=p
    copy c[j : q]  to a[k : p + q]
  else
    copy c[i : q]  to a[k : p + q]
}
```

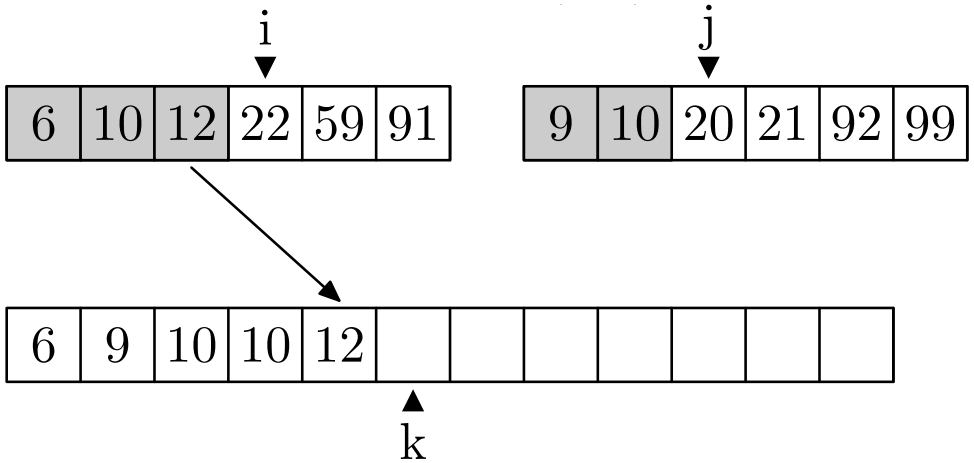

Merge

```
MERGE(b[1 : p], c[1 : q], a[1 : p + q])
{
  i←1
  j←1
  k←1
  while i ≤ p  and j ≤ q  do
    if b_i ≤ c_j
      a_k ←b_i
      i ←i+1
    else
      a_k ←c_j
      j ←j+1
    endif
    k ←k+1
  end
  if i=p
    copy c[j : q]  to a[k : p + q]
  else
    copy c[i : q]  to a[k : p + q]
}
```

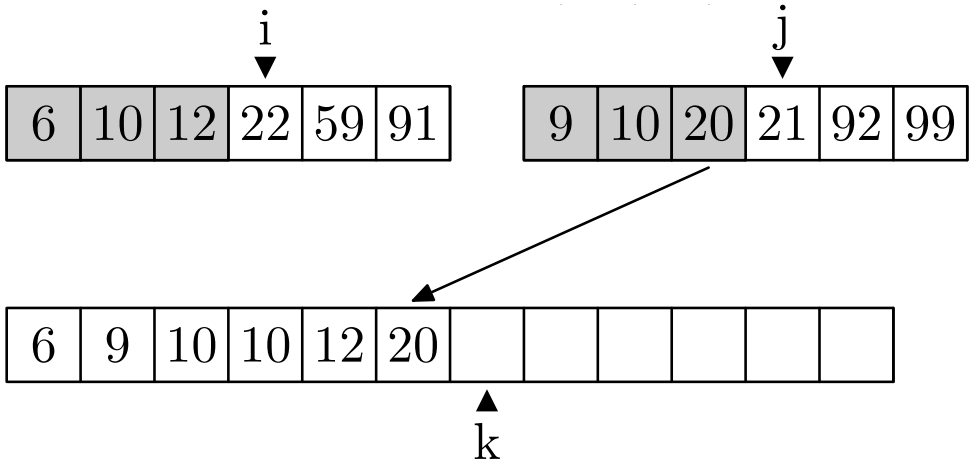

Merge

```
MERGE(b[1 : p], c[1 : q], a[1 : p + q])
{
  i←1
  j←1
  k←1
  while i ≤ p  and j ≤ q  do
    if b_i ≤ c_j
      a_k ←b_i
      i ←i+1
    else
      a_k ←c_j
      j ←j+1
    endif
    k ←k+1
  end
  if i=p
    copy c[j : q]  to a[k : p + q]
  else
    copy c[i : q]  to a[k : p + q]
}
```

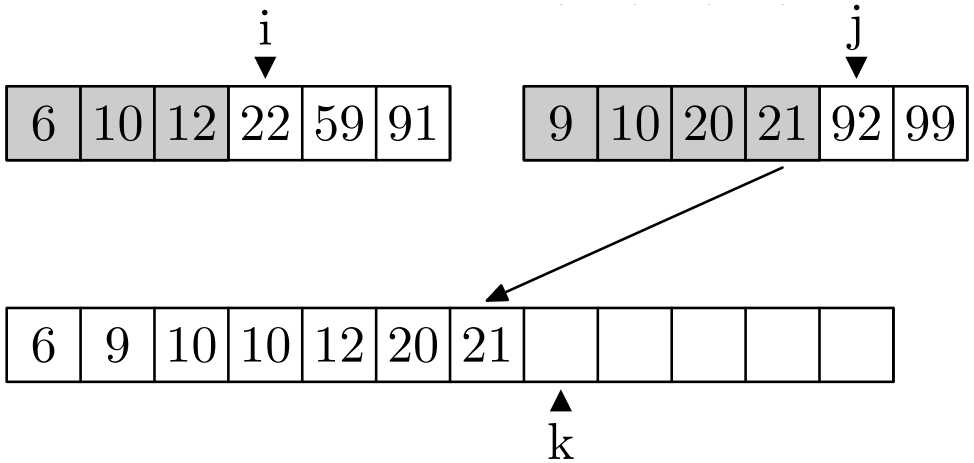

Merge

```
MERGE(b[1 : p], c[1 : q], a[1 : p + q])
{
  i←1
  j←1
  k←1
  while i ≤ p  and j ≤ q  do
    if b_i ≤ c_j
      a_k ←b_i
      i ←i+1
    else
      a_k ←c_j
      j ←j+1
    endif
    k ←k+1
  end
  if i=p
    copy c[j : q]  to a[k : p + q]
  else
    copy c[i : q]  to a[k : p + q]
}
```

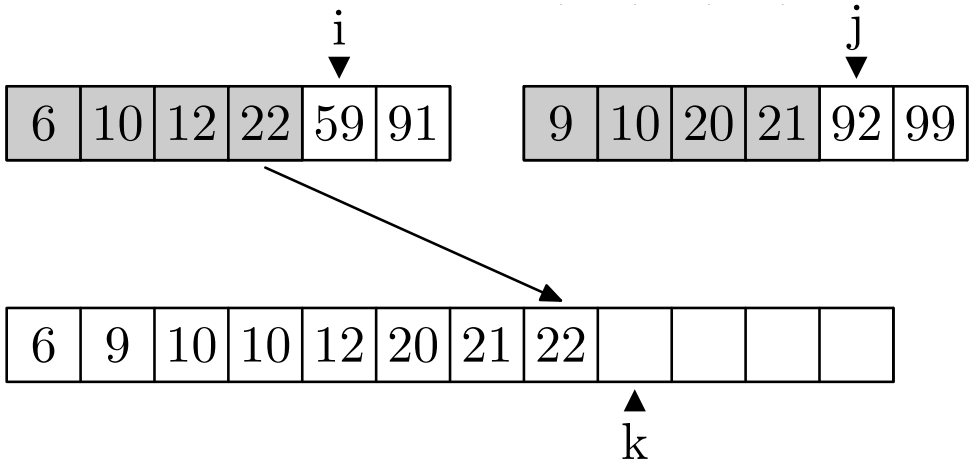

Merge

```
MERGE(b[1 : p], c[1 : q], a[1 : p + q])
{
  i←1
  j←1
  k←1
  while i ≤ p  and j ≤ q  do
    if b_i ≤ c_j
      a_k ←b_i
      i ←i+1
    else
      a_k ←c_j
      j ←j+1
    endif
    k ←k+1
  end
  if i=p
    copy c[j : q]  to a[k : p + q]
  else
    copy c[i : q]  to a[k : p + q]
}
```

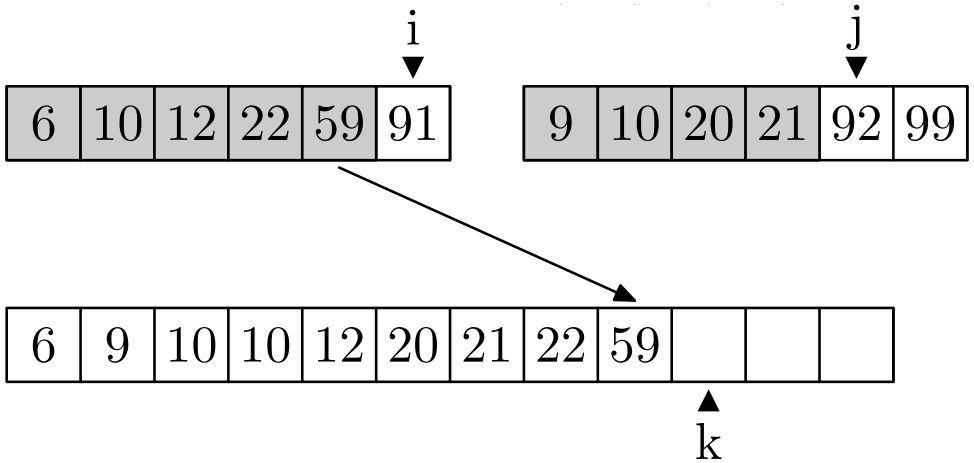

Merge

```
MERGE(b[1 : p], c[1 : q], a[1 : p + q])
{
  i←1
  j←1
  k←1
  while i ≤ p  and j ≤ q  do
    if b_i ≤ c_j
      a_k ←b_i
      i ←i+1
    else
      a_k ←c_j
      j ←j+1
    endif
    k ←k+1
  end
  if i=p
    copy c[j : q]  to a[k : p + q]
  else
    copy c[i : q]  to a[k : p + q]
}
```

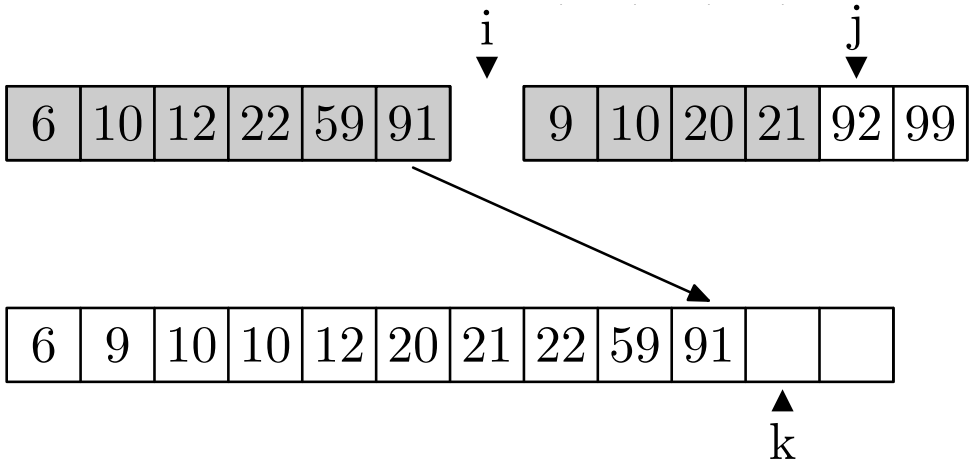

Merge

```
MERGE(b[1 : p], c[1 : q], a[1 : p + q])
{
  i←1
  j←1
  k←1
  while i ≤ p  and j ≤ q  do
    if b_i ≤ c_j
      a_k ←b_i
      i ←i+1
    else
      a_k ←c_j
      j ←j+1
    endif
    k ←k+1
  end
  if i=p
    copy c[j : q]  to a[k : p + q]
  else
    copy c[i : q]  to a[k : p + q]
}
```

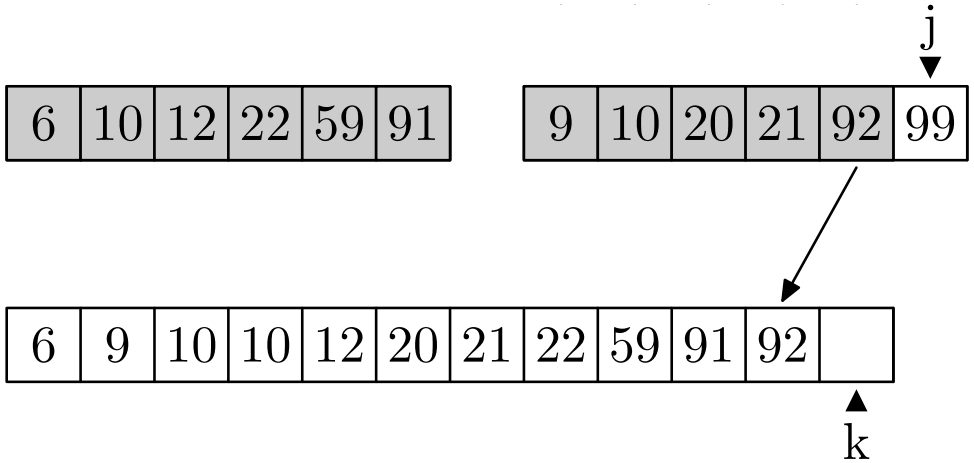

Merge

```
MERGE(b[1 : p], c[1 : q], a[1 : p + q])
{
  i←1
  j←1
  k←1
  while i ≤ p  and j ≤ q  do
    if b_i ≤ c_j
      a_k ←b_i
      i ←i+1
    else
      a_k ←c_j
      j ←j+1
    endif
    k ←k+1
  end
  if i=p
    copy c[j : q]  to a[k : p + q]
  else
    copy c[i : q]  to a[k : p + q]
}
```

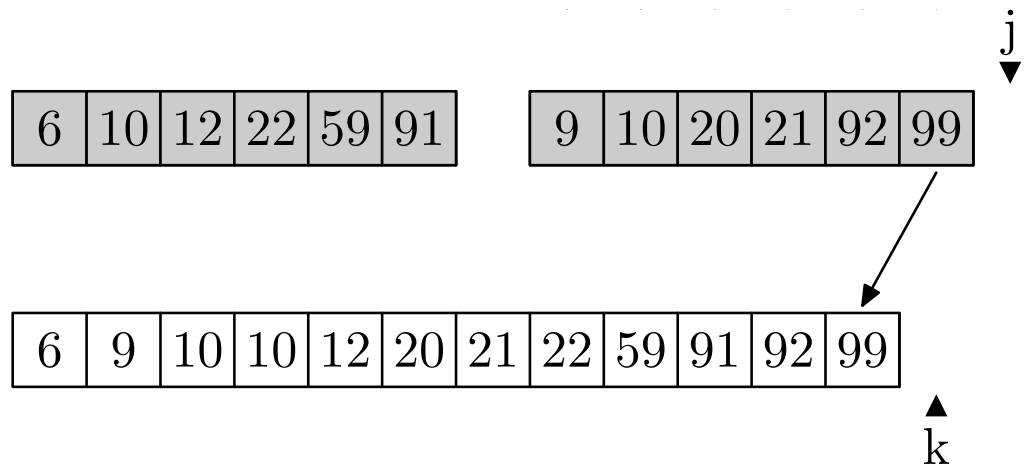

Properties of Merge Sort

- Merge sort is stable provided we merge carefully (i.e. it preserves the order of two entries with the same value)
- Merge sort isn't in-place—we need an array of at most size n to do the merging
- Merging is quick. Given two arrays of size n the most number of comparisons we need to perform is $n - 1$

Properties of Merge Sort

- Merge sort is stable provided we merge carefully (i.e. it preserves the order of two entries with the same value)
- Merge sort isn't in-place—we need an array of at most size n to do the merging
- Merging is quick. Given two arrays of size n the most number of comparisons we need to perform is $n - 1$

Properties of Merge Sort

- Merge sort is stable provided we merge carefully (i.e. it preserves the order of two entries with the same value)
- Merge sort isn't in-place—we need an array of at most size n to do the merging
- Merging is quick. Given two arrays of size n the most number of comparisons we need to perform is $n - 1$

Properties of Merge Sort

- Merge sort is stable provided we merge carefully (i.e. it preserves the order of two entries with the same value)
- Merge sort isn't in-place—we need an array of at most size n to do the merging
- Merging is quick. Given two arrays of size n the most number of comparisons we need to perform is $n - 1$

Properties of Merge Sort

- Merge sort is stable provided we merge carefully (i.e. it preserves the order of two entries with the same value)
- Merge sort isn't in-place—we need an array of at most size n to do the merging
- Merging is quick. Given two arrays of size n the most number of comparisons we need to perform is $n - 1$

Time Complexity of Merge Sort

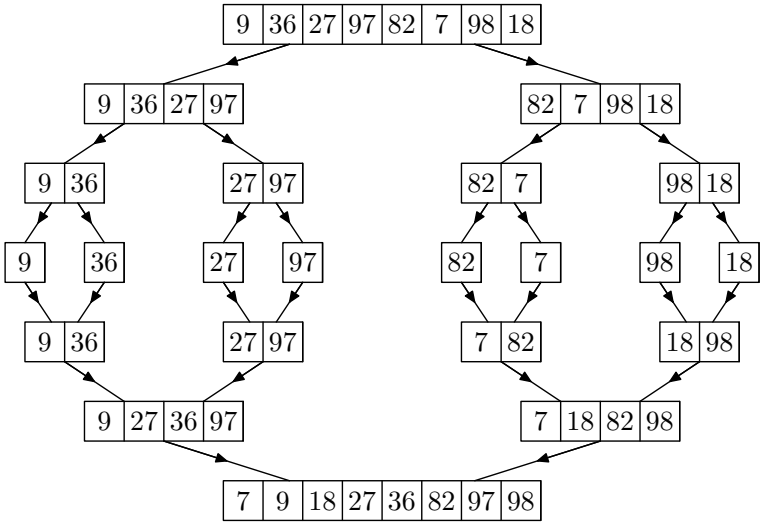

$$n = 8$$

Time Complexity of Merge Sort

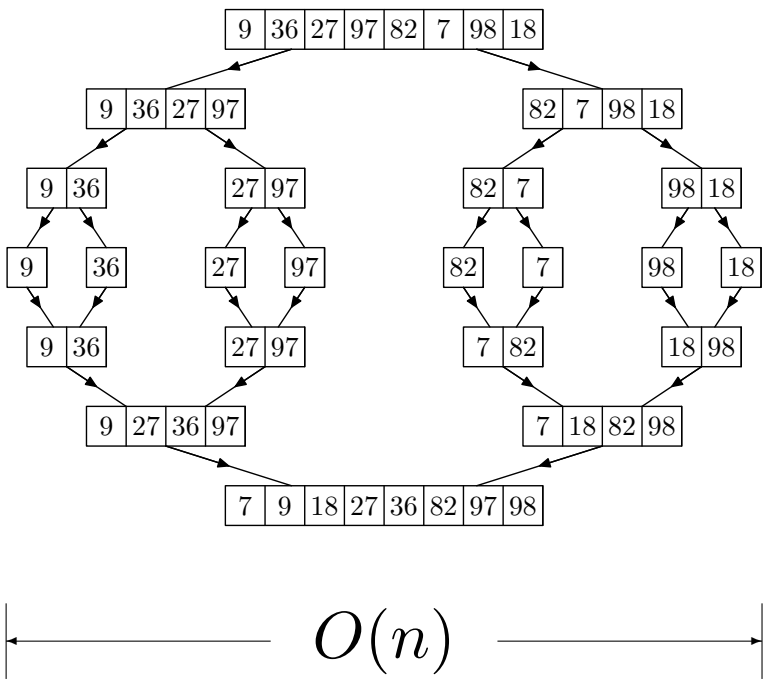

$$n = 8$$

Time Complexity of Merge Sort

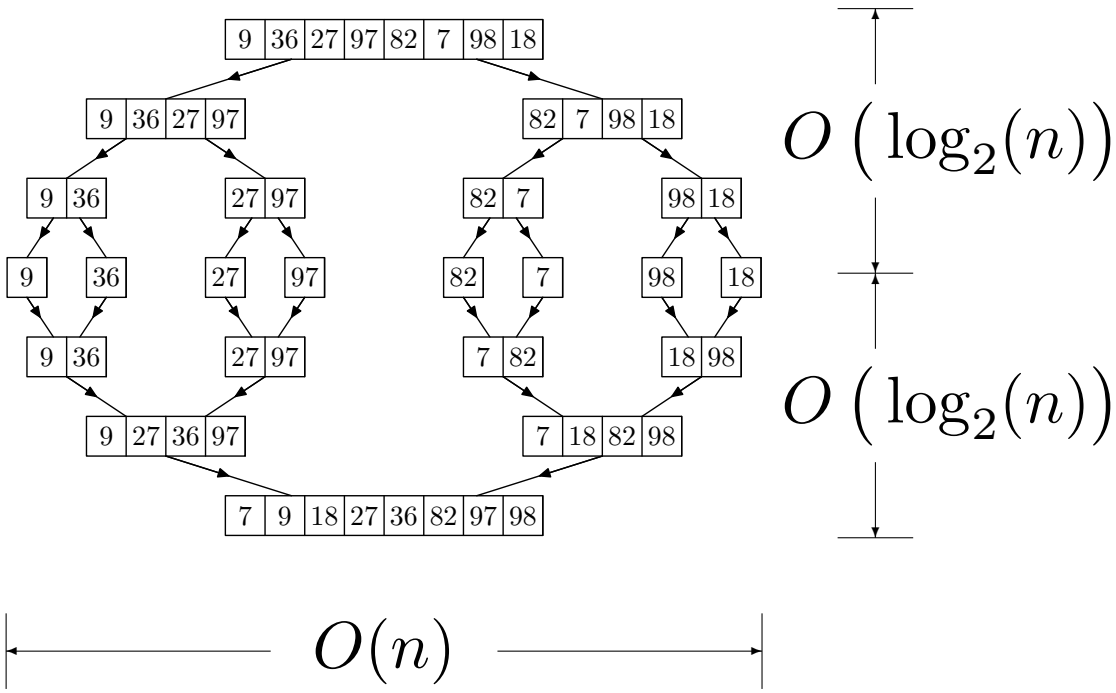

$n = 8$

Time Complexity of Merge Sort

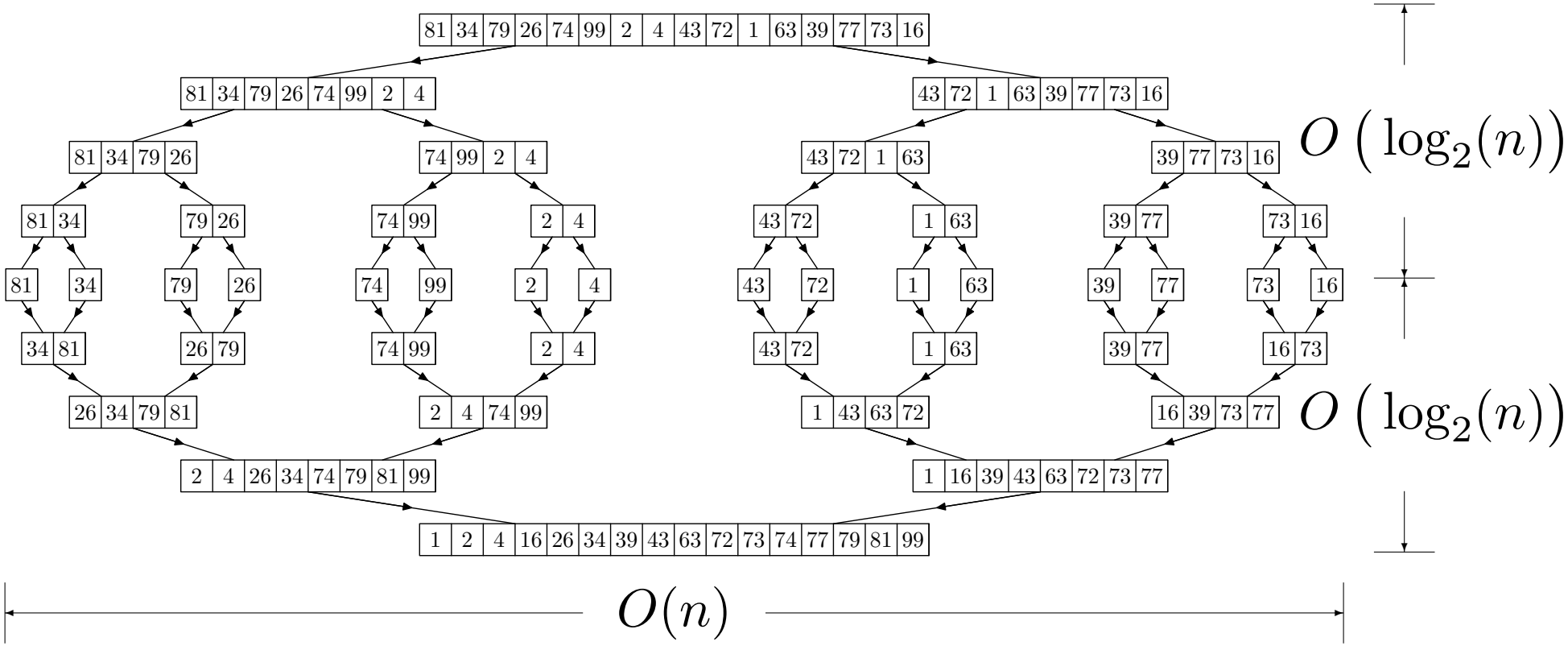

$n = 16$

Time Complexity

- We again measure the complexity in the number of comparisons
- From the above argument $C(n) = O(n \times \log_2(n))$
- We can be a bit more formal

$$C(n) = 2C(\lfloor n/2 \rfloor) + C_{\text{merge}}(n) \qquad \text{for } n > 1$$
$$C(0) = 1$$

- But in the worst case $C_{\text{merge}}(n) = n - 1$
- Leads to $C_{\text{worst}}(n) = n \log_2(n) - n + 1$

Time Complexity

- We again measure the complexity in the number of comparisons
- From the above argument $C(n) = O(n \times \log_2(n))$
- We can be a bit more formal

$$C(n) = 2C(\lfloor n/2 \rfloor) + C_{\text{merge}}(n) \qquad \text{for } n > 1$$
$$C(0) = 1$$

- But in the worst case $C_{\text{merge}}(n) = n - 1$
- Leads to $C_{\text{worst}}(n) = n \log_2(n) - n + 1$

Time Complexity

- We again measure the complexity in the number of comparisons
- From the above argument $C(n) = O(n \times \log_2(n))$
- We can be a bit more formal

$$C(n) = 2C(\lfloor n/2 \rfloor) + C_{\text{merge}}(n) \qquad \text{for } n > 1$$
$$C(0) = 1$$

- But in the worst case $C_{\text{merge}}(n) = n - 1$
- Leads to $C_{\text{worst}}(n) = n \log_2(n) - n + 1$

Time Complexity

- We again measure the complexity in the number of comparisons
- From the above argument $C(n) = O(n \times \log_2(n))$
- We can be a bit more formal

$$C(n) = 2C(\lfloor n/2 \rfloor) + C_{\text{merge}}(n) \qquad \text{for } n > 1$$
$$C(0) = 1$$

- But in the worst case $C_{\text{merge}}(n) = n - 1$
- Leads to $C_{\text{worst}}(n) = n \log_2(n) - n + 1$

Time Complexity

- We again measure the complexity in the number of comparisons
- From the above argument $C(n) = O(n \times \log_2(n))$
- We can be a bit more formal

$$C(n) = 2C(\lfloor n/2 \rfloor) + C_{\text{merge}}(n) \qquad \text{for } n > 1$$
$$C(0) = 1$$

- But in the worst case $C_{\text{merge}}(n) = n - 1$
- Leads to $C_{\text{worst}}(n) = n \log_2(n) - n + 1$

General Time Complexity

- In general if we have a recursion formula

$$T(n) = aT(n/b) + f(n)$$

with $a \geq 1$, $b > 1$

- If $f(n) \in \Theta(n^d)$ where $d \geq 0$ then

$$T(n) \in \begin{cases} \Theta\left(n^d\right) & \text{if } a < b^d \\ \Theta\left(n^d \log(n)\right) & \text{if } a = b^d \\ \Theta\left(n^{\log_d(a)}\right) & \text{if } a > b^d \end{cases}$$

- Analogous results hold for the family O and Ω

General Time Complexity

- In general if we have a recursion formula

$$T(n) = aT(n/b) + f(n)$$

with $a \geq 1$, $b > 1$

- If $f(n) \in \Theta(n^d)$ where $d \geq 0$ then

$$T(n) \in \begin{cases} \Theta\left(n^d\right) & \text{if } a < b^d \\ \Theta\left(n^d \log(n)\right) & \text{if } a = b^d \\ \Theta\left(n^{\log_d(a)}\right) & \text{if } a > b^d \end{cases}$$

- Analogous results hold for the family O and Ω

General Time Complexity

- In general if we have a recursion formula

$$T(n) = aT(n/b) + f(n)$$

with $a \geq 1$, $b > 1$

- If $f(n) \in \Theta(n^d)$ where $d \geq 0$ then

$$T(n) \in \begin{cases} \Theta\left(n^d\right) & \text{if } a < b^d \\ \Theta\left(n^d \log(n)\right) & \text{if } a = b^d \\ \Theta\left(n^{\log_d(a)}\right) & \text{if } a > b^d \end{cases}$$

- Analogous results hold for the family O and Ω

General Time Complexity

- In general if we have a recursion formula

$$T(n) = aT(n/b) + f(n)$$

with $a \geq 1$, $b > 1$

- If $f(n) \in \Theta(n^d)$ where $d \geq 0$ then

$$T(n) \in \begin{cases} \Theta\left(n^d\right) & \text{if } a < b^d \\ \Theta\left(n^d \log(n)\right) & \text{if } a = b^d \\ \Theta\left(n^{\log_d(a)}\right) & \text{if } a > b^d \end{cases}$$

- Analogous results hold for the family O and Ω

Mixing Sort

- For very short sequences it is faster to use insertion sort than to pay the overhead of function calls

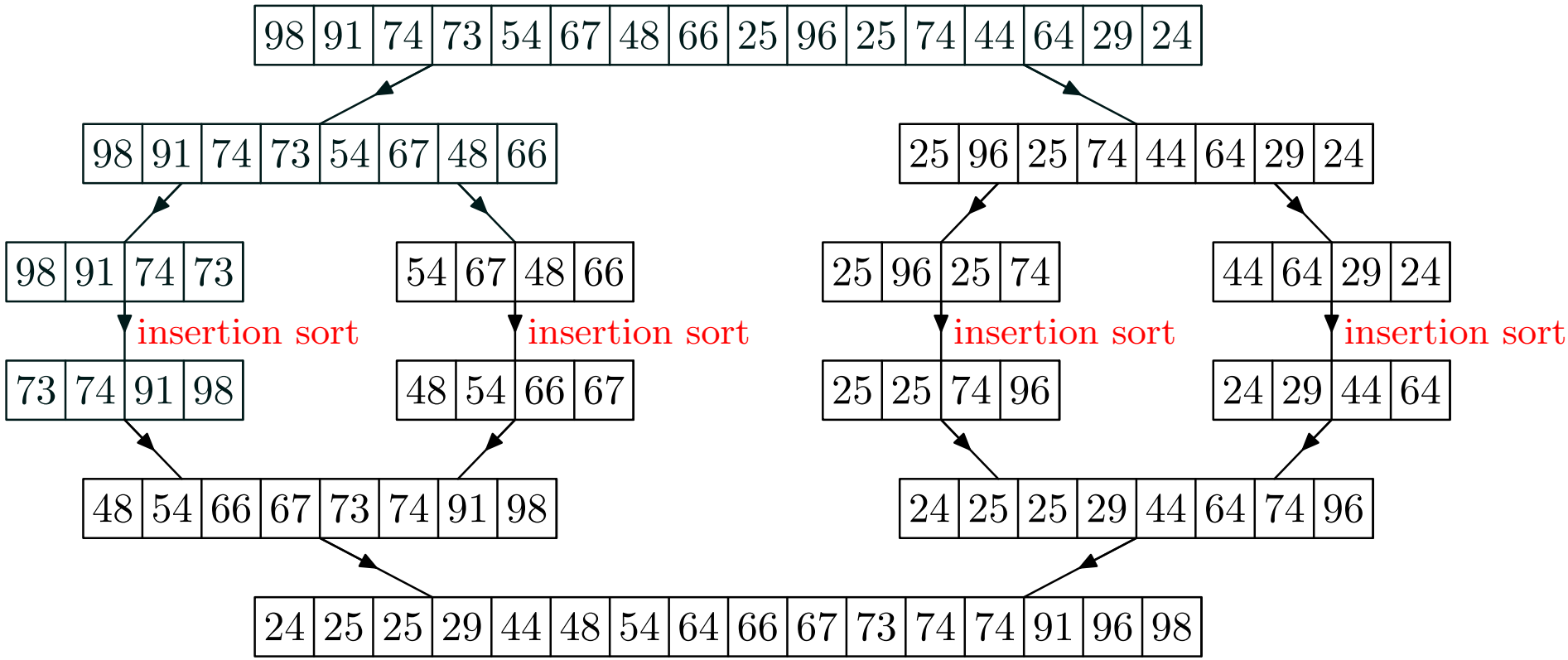

Mixing Sort

- For very short sequences it is faster to use insertion sort than to pay the overhead of function calls

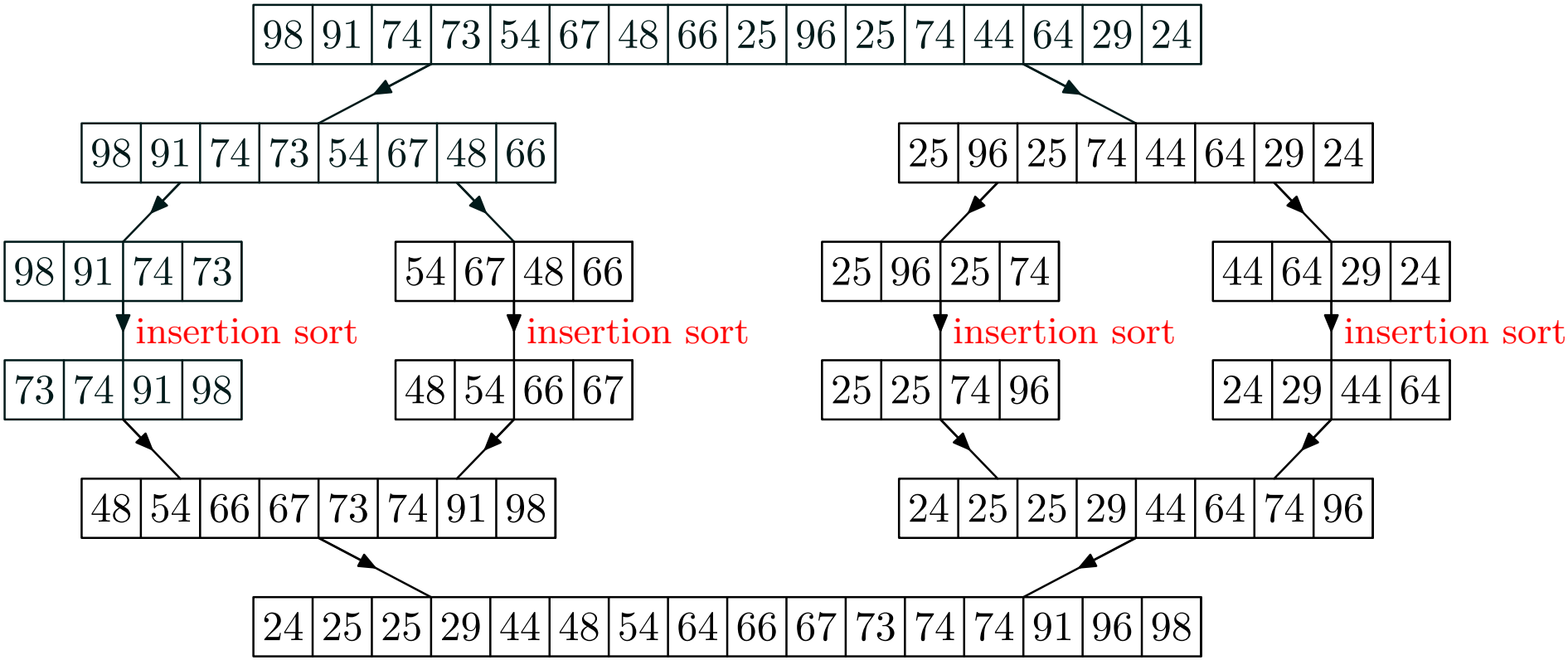

Outline

1. Merge Sort
2. **Quick Sort**
3. Radix Sort

Quicksort

- The most commonly used fast sorting algorithm is **quicksort**
- It was invented by the British computer scientist by C. A. R. Hoare in 1962
- It again uses the divide-and-conquer strategy
- It can be performed in-place, but it is **not** stable
- It works by splitting an array into two depending on whether the elements are less than or greater than a **pivot** value
- This is done recursively until the full array is sorted

Quicksort

- The most commonly used fast sorting algorithm is **quicksort**
- It was invented by the British computer scientist by C. A. R. Hoare in 1962
- It again uses the divide-and-conquer strategy
- It can be performed in-place, but it is **not** stable
- It works by splitting an array into two depending on whether the elements are less than or greater than a **pivot** value
- This is done recursively until the full array is sorted

Quicksort

- The most commonly used fast sorting algorithm is **quicksort**
- It was invented by the British computer scientist by C. A. R. Hoare in 1962
- It again uses the divide-and-conquer strategy
- It can be performed in-place, but it is **not** stable
- It works by splitting an array into two depending on whether the elements are less than or greater than a **pivot** value
- This is done recursively until the full array is sorted

Quicksort

- The most commonly used fast sorting algorithm is **quicksort**
- It was invented by the British computer scientist by C. A. R. Hoare in 1962
- It again uses the divide-and-conquer strategy
- It can be performed in-place, but it is **not** stable
- It works by splitting an array into two depending on whether the elements are less than or greater than a **pivot** value
- This is done recursively until the full array is sorted

Quicksort

- The most commonly used fast sorting algorithm is **quicksort**
- It was invented by the British computer scientist by C. A. R. Hoare in 1962
- It again uses the divide-and-conquer strategy
- It can be performed in-place, but it is **not** stable
- It works by splitting an array into two depending on whether the elements are less than or greater than a **pivot** value
- This is done recursively until the full array is sorted

Quicksort

- The most commonly used fast sorting algorithm is **quicksort**
- It was invented by the British computer scientist by C. A. R. Hoare in 1962
- It again uses the divide-and-conquer strategy
- It can be performed in-place, but it is **not** stable
- It works by splitting an array into two depending on whether the elements are less than or greater than a **pivot** value
- This is done recursively until the full array is sorted

Partition

- We need to partition the array around the pivot p such that

all elements < p	all elements >= p

```
PARTITION(a, p, left, right)
{
  i ←left
  j ←right
  repeat {
    while a_i < p
      i++
    while a_j ≥ p
      j--
    if i ≥ j
      break
    SWAP(a_i, a_j)
  }
}
```

Partition

- We need to partition the array around the pivot p such that

all elements < p	all elements >= p

```
PARTITION(a, p, left, right)
{
  i ←left
  j ←right
  repeat {
    while a_i < p
      i++
    while a_j ≥ p
      j--
    if i ≥ j
      break
    SWAP(a_i, a_j)
  }
}
```

Partition

- We need to partition the array around the pivot p such that

all elements < p	all elements >= p

```
PARTITION(a, p, left, right)
{
  i ←left
  j ←right
  repeat {
    while a_i < p
      i++
    while a_j ≥ p
      j--
    if i ≥ j
      break
    SWAP(a_i, a_j)
  }
}
```

pivot = 52

52	49	96	29	40	87	73	10	47	60	6	11	33	94	57	85
▲ i															▲ j

Partition

- We need to partition the array around the pivot p such that

all elements < p	all elements >= p

```
PARTITION(a, p, left, right)
{
  i ←left
  j ←right
  repeat {
    while a_i < p
      i++
    while a_j ≥ p
      j--
    if i ≥ j
      break
    SWAP(a_i, a_j)
  }
}
```

pivot = 52

52	49	96	29	40	87	73	10	47	60	6	11	33	94	57	85
i														j	

Partition

- We need to partition the array around the pivot p such that

all elements < p	all elements >= p

```
PARTITION(a, p, left, right)
{
  i ←left
  j ←right
  repeat {
    while a_i < p
      i++
    while a_j ≥ p
      j--
    if i ≥ j
      break
    SWAP(a_i, a_j)
  }
}
```

pivot = 52

52	49	96	29	40	87	73	10	47	60	6	11	33	94	57	85
▲ i													▲ j		

Partition

- We need to partition the array around the pivot p such that

all elements < p	all elements >= p

```
PARTITION(a, p, left, right)
{
  i ←left
  j ←right
  repeat {
    while a_i < p
      i++
    while a_j ≥ p
      j--
    if i ≥ j
      break
    SWAP(a_i, a_j)
  }
}
```

pivot = 52

52	49	96	29	40	87	73	10	47	60	6	11	33	94	57	85
▲ i												▲ j			

Partition

- We need to partition the array around the pivot p such that

all elements < p	all elements >= p

```
PARTITION(a, p, left, right)
{
  i ←left
  j ←right
  repeat {
    while a_i < p
      i++
    while a_j ≥ p
      j--
    if i ≥ j
      break
    SWAP(a_i, a_j)
  }
}
```

pivot = 52

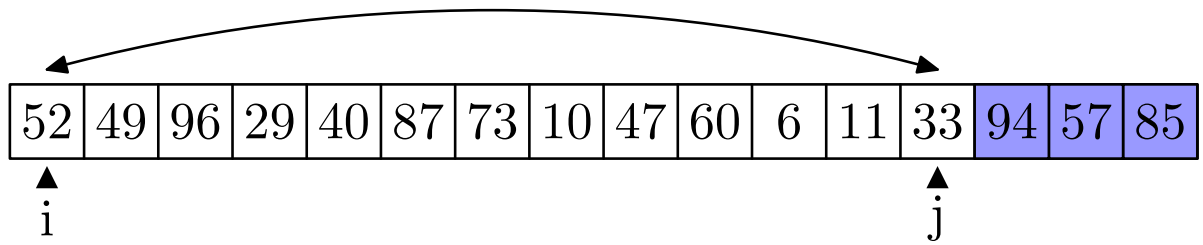

Partition

- We need to partition the array around the pivot p such that

all elements < p	all elements >= p

```
PARTITION(a, p, left, right)
{
  i ←left
  j ←right
  repeat {
    while a_i < p
      i++
    while a_j ≥ p
      j--
    if i ≥ j
      break
    SWAP(a_i, a_j)
  }
}
```

pivot = 52

33	49	96	29	40	87	73	10	47	60	6	11	52	94	57	85
▲ i												▲ j			

Partition

- We need to partition the array around the pivot p such that

all elements < p	all elements >= p

```
PARTITION(a, p, left, right)
{
  i ←left
  j ←right
  repeat {
    while a_i < p
      i++
    while a_j ≥ p
      j--
    if i ≥ j
      break
    SWAP(a_i, a_j)
  }
}
```

pivot = 52

33	49	96	29	40	87	73	10	47	60	6	11	52	94	57	85
	▲ i											▲ j			

Partition

- We need to partition the array around the pivot p such that

all elements < p	all elements >= p

```
PARTITION(a, p, left, right)
{
  i ←left
  j ←right
  repeat {
    while a_i < p
      i++
    while a_j ≥ p
      j--
    if i ≥ j
      break
    SWAP(a_i, a_j)
  }
}
```

pivot = 52

33	49	96	29	40	87	73	10	47	60	6	11	52	94	57	85
		▲ i										▲ j			

Partition

- We need to partition the array around the pivot p such that

all elements < p	all elements >= p

```
PARTITION(a, p, left, right)
{
  i ←left
  j ←right
  repeat {
    while a_i < p
      i++
    while a_j ≥ p
      j--
    if i ≥ j
      break
    SWAP(a_i, a_j)
  }
}
```

pivot = 52

33	49	96	29	40	87	73	10	47	60	6	11	52	94	57	85
		▲ i									▲ j				

Partition

- We need to partition the array around the pivot p such that

all elements < p	all elements >= p

```
PARTITION(a, p, left, right)
{
  i ←left
  j ←right
  repeat {
    while a_i < p
      i++
    while a_j ≥ p
      j--
    if i ≥ j
      break
    SWAP(a_i, a_j)
  }
}
```

pivot = 52

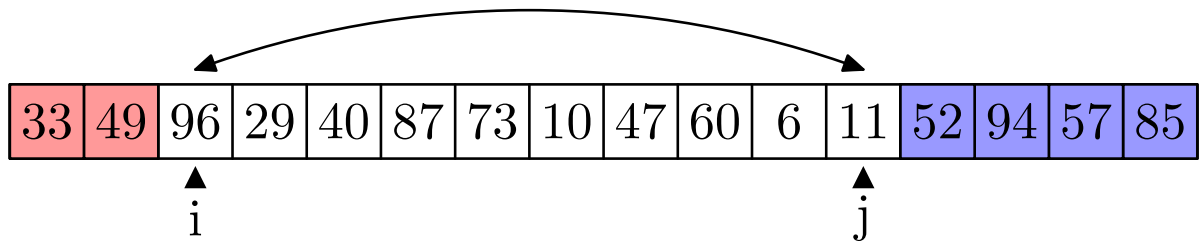

Partition

- We need to partition the array around the pivot p such that

all elements < p	all elements >= p

```
PARTITION(a, p, left, right)
{
  i ←left
  j ←right
  repeat {
    while a_i < p
      i++
    while a_j ≥ p
      j--
    if i ≥ j
      break
    SWAP(a_i, a_j)
  }
}
```

pivot = 52

33	49	11	29	40	87	73	10	47	60	6	96	52	94	57	85
		▲ i									▲ j				

Partition

- We need to partition the array around the pivot p such that

all elements < p	all elements >= p

```
PARTITION(a, p, left, right)
{
  i ←left
  j ←right
  repeat {
    while a_i < p
      i++
    while a_j ≥ p
      j--
    if i ≥ j
      break
    SWAP(a_i, a_j)
  }
}
```

pivot = 52

33	49	11	29	40	87	73	10	47	60	6	96	52	94	57	85
			i								j				

Partition

- We need to partition the array around the pivot p such that

all elements < p	all elements >= p

```
PARTITION(a, p, left, right)
{
  i ←left
  j ←right
  repeat {
    while a_i < p
      i++
    while a_j ≥ p
      j--
    if i ≥ j
      break
    SWAP(a_i, a_j)
  }
}
```

pivot = 52

33	49	11	29	40	87	73	10	47	60	6	96	52	94	57	85
				▲ i							▲ j				

Partition

- We need to partition the array around the pivot p such that

all elements < p	all elements >= p

```
PARTITION(a, p, left, right)
{
  i ←left
  j ←right
  repeat {
    while a_i < p
      i++
    while a_j ≥ p
      j--
    if i ≥ j
      break
    SWAP(a_i, a_j)
  }
}
```

pivot = 52

33	49	11	29	40	87	73	10	47	60	6	96	52	94	57	85
					▲ i						▲ j				

Partition

- We need to partition the array around the pivot p such that

all elements < p	all elements >= p

```
PARTITION(a, p, left, right)
{
  i ←left
  j ←right
  repeat {
    while a_i < p
      i++
    while a_j ≥ p
      j--
    if i ≥ j
      break
    SWAP(a_i, a_j)
  }
}
```

pivot = 52

33	49	11	29	40	87	73	10	47	60	6	96	52	94	57	85
					▲ i					▲ j					

Partition

- We need to partition the array around the pivot p such that

all elements < p	all elements >= p

```
PARTITION(a, p, left, right)
{
  i ←left
  j ←right
  repeat {
    while a_i < p
      i++
    while a_j ≥ p
      j--
    if i ≥ j
      break
    SWAP(a_i, a_j)
  }
}
```

pivot = 52

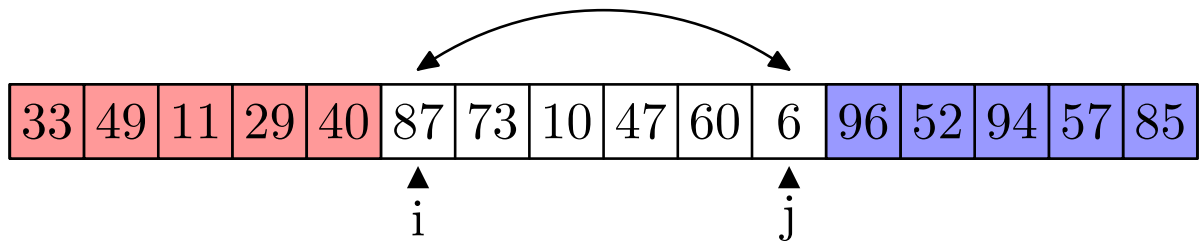

Partition

- We need to partition the array around the pivot p such that

all elements < p	all elements >= p

```
PARTITION(a, p, left, right)
{
  i ←left
  j ←right
  repeat {
    while a_i < p
      i++
    while a_j ≥ p
      j--
    if i ≥ j
      break
    SWAP(a_i, a_j)
  }
}
```

pivot = 52

33	49	11	29	40	6	73	10	47	60	87	96	52	94	57	85
					▲ i					▲ j					

Partition

- We need to partition the array around the pivot p such that

all elements < p	all elements >= p

```
PARTITION(a, p, left, right)
{
  i ←left
  j ←right
  repeat {
    while a_i < p
      i++
    while a_j ≥ p
      j--
    if i ≥ j
      break
    SWAP(a_i, a_j)
  }
}
```

pivot = 52

33	49	11	29	40	6	73	10	47	60	87	96	52	94	57	85
						▲ i				▲ j					

Partition

- We need to partition the array around the pivot p such that

all elements < p	all elements >= p

```
PARTITION(a, p, left, right)
{
  i ←left
  j ←right
  repeat {
    while a_i < p
      i++
    while a_j ≥ p
      j--
    if i ≥ j
      break
    SWAP(a_i, a_j)
  }
}
```

pivot = 52

33	49	11	29	40	6	73	10	47	60	87	96	52	94	57	85
						▲ i			▲ j						

Partition

- We need to partition the array around the pivot p such that

all elements < p	all elements >= p

```
PARTITION(a, p, left, right)
{
  i ←left
  j ←right
  repeat {
    while a_i < p
      i++
    while a_j ≥ p
      j--
    if i ≥ j
      break
    SWAP(a_i, a_j)
  }
}
```

pivot = 52

33	49	11	29	40	6	73	10	47	60	87	96	52	94	57	85
						i		j							

Partition

- We need to partition the array around the pivot p such that

all elements < p	all elements >= p

```
PARTITION(a, p, left, right)
{
  i ←left
  j ←right
  repeat {
    while a_i < p
      i++
    while a_j ≥ p
      j--
    if i ≥ j
      break
    SWAP(a_i, a_j)
  }
}
```

pivot = 52

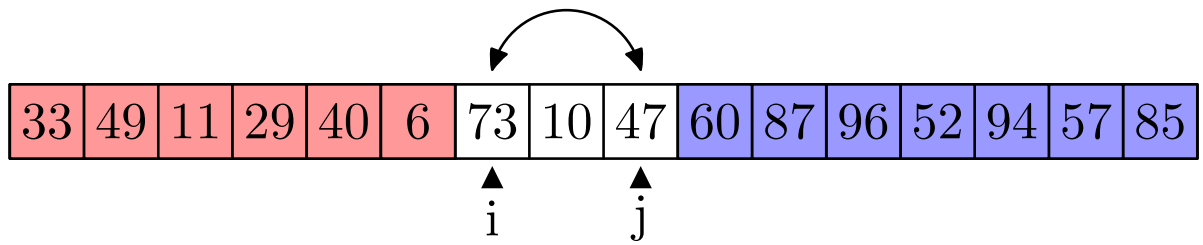

Partition

- We need to partition the array around the pivot p such that

all elements < p	all elements >= p

```
PARTITION(a, p, left, right)
{
  i ←left
  j ←right
  repeat {
    while a_i < p
      i++
    while a_j ≥ p
      j--
    if i ≥ j
      break
    SWAP(a_i, a_j)
  }
}
```

pivot = 52

33	49	11	29	40	6	47	10	73	60	87	96	52	94	57	85
						i		j							

Partition

- We need to partition the array around the pivot p such that

all elements < p	all elements >= p

```
PARTITION(a, p, left, right)
{
  i ←left
  j ←right
  repeat {
    while a_i < p
      i++
    while a_j ≥ p
      j--
    if i ≥ j
      break
    SWAP(a_i, a_j)
  }
}
```

pivot = 52

33	49	11	29	40	6	47	10	73	60	87	96	52	94	57	85
							i	j							

Partition

- We need to partition the array around the pivot p such that

all elements < p	all elements >= p

```
PARTITION(a, p, left, right)
{
  i ←left
  j ←right
  repeat {
    while a_i < p
      i++
    while a_j ≥ p
      j--
    if i ≥ j
      break
    SWAP(a_i, a_j)
  }
}
```

pivot = 52

33	49	11	29	40	6	47	10	73	60	87	96	52	94	57	85

j

Partition

- We need to partition the array around the pivot p such that

all elements < p	all elements >= p

```
PARTITION(a, p, left, right)
{
  i ←left
  j ←right
  repeat {
    while a_i < p
      i++
    while a_j ≥ p
      j--
    if i ≥ j
      break
    SWAP(a_i, a_j)
  }
}
```

pivot = 52

33	49	11	29	40	6	47	10	73	60	87	96	52	94	57	85
							↑ j								

Optimising Partitioning

- There are different ways of performing the partitioning
- We want to minimise the time taken on the inner loop
- This means we want to perform as few checks as possible
- One method of doing this is to place *sentinels* at the ends of the array
- We can also reduce work by placing the partition in its correct position

all elements <= p	p	all elements >= p

Optimising Partitioning

- There are different ways of performing the partitioning
- We want to minimise the time taken on the inner loop
- This means we want to perform as few checks as possible
- One method of doing this is to place *sentinels* at the ends of the array
- We can also reduce work by placing the partition in its correct position

all elements <= p	p	all elements >= p

Optimising Partitioning

- There are different ways of performing the partitioning
- We want to minimise the time taken on the inner loop
- This means we want to perform as few checks as possible
- One method of doing this is to place *sentinels* at the ends of the array
- We can also reduce work by placing the partition in its correct position

all elements <= p	p	all elements >= p

Optimising Partitioning

- There are different ways of performing the partitioning
- We want to minimise the time taken on the inner loop
- This means we want to perform as few checks as possible
- One method of doing this is to place *sentinels* at the ends of the array
- We can also reduce work by placing the partition in its correct position

all elements <= p	p	all elements >= p

Optimising Partitioning

- There are different ways of performing the partitioning
- We want to minimise the time taken on the inner loop
- This means we want to perform as few checks as possible
- One method of doing this is to place *sentinels* at the ends of the array
- We can also reduce work by placing the partition in its correct position

all elements <= p	p	all elements >= p

Choosing the Pivot

- There are different strategies to choosing the pivot
- Choose the first element in the array
- Choose the median of the first, middle and last element of the array
- This increases the likelihood of the pivot being close to the median of the whole array
- For large arrays (above 40) the median of 3 medians is often used

Choosing the Pivot

- There are different strategies to choosing the pivot
- Choose the first element in the array
- Choose the median of the first, middle and last element of the array
- This increases the likelihood of the pivot being close to the median of the whole array
- For large arrays (above 40) the median of 3 medians is often used

Choosing the Pivot

- There are different strategies to choosing the pivot
- Choose the first element in the array
- Choose the median of the first, middle and last element of the array
- This increases the likelihood of the pivot being close to the median of the whole array
- For large arrays (above 40) the median of 3 medians is often used

Choosing the Pivot

- There are different strategies to choosing the pivot
- Choose the first element in the array
- Choose the median of the first, middle and last element of the array
- This increases the likelihood of the pivot being close to the median of the whole array
- For large arrays (above 40) the median of 3 medians is often used

Choosing the Pivot

- There are different strategies to choosing the pivot
- Choose the first element in the array
- Choose the median of the first, middle and last element of the array
- This increases the likelihood of the pivot being close to the median of the whole array
- For large arrays (above 40) the median of 3 medians is often used

Quicksort

We recursively partition the array until each partition is small enough to sort using insertion sort

```
QuickSort(a, left, right) {
  if (right-left < threshold)
    InsertionSort(a, left, right)
  else
    pivot = ChoosePivot(a, left, right)
    part = Partition(a, pivot, left, right)
    QuickSort(a, left, part-1)
    QuickSort(a, part+1, right)
  endif
}
```

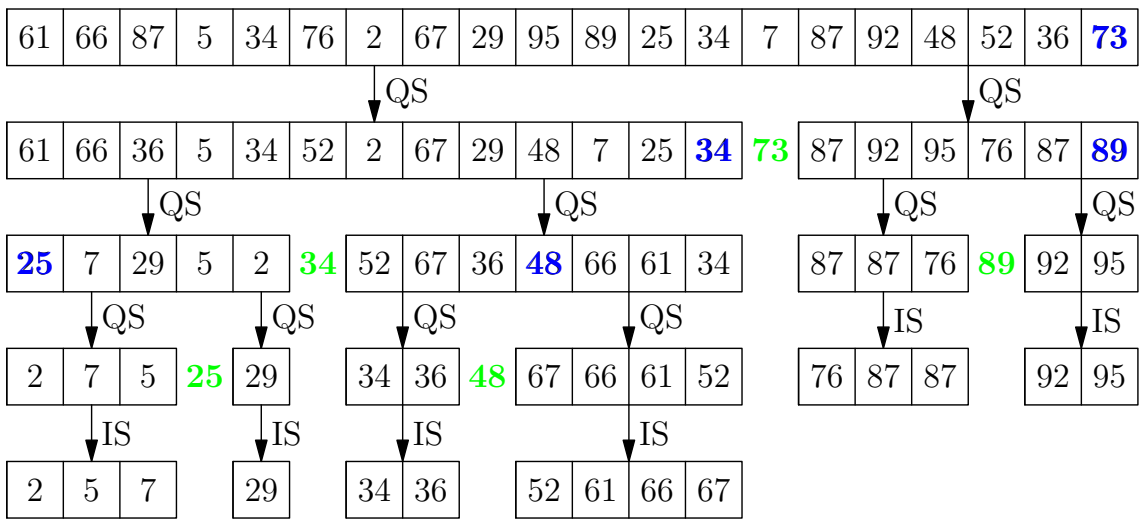

Quicksort

We recursively partition the array until each partition is small enough to sort using insertion sort

```
QuickSort(a, left, right) {
  if (right-left < threshold)
    InsertionSort(a, left, right)
  else
    pivot = ChoosePivot(a, left, right)
    part = Partition(a, pivot, left, right)
    QuickSort(a, left, part-1)
    QuickSort(a, part+1, right)
  endif
}
```

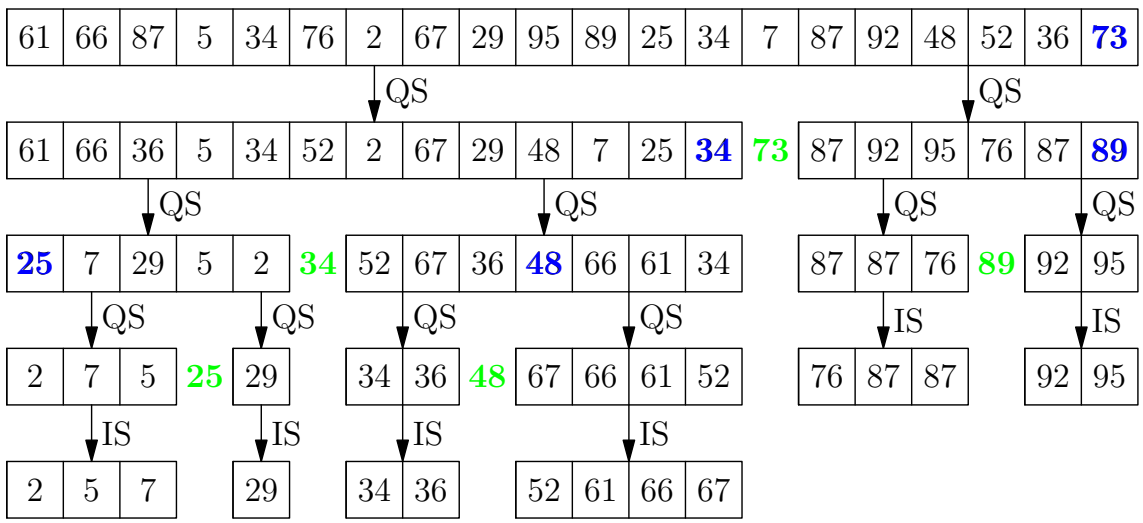

Quicksort

We recursively partition the array until each partition is small enough to sort using insertion sort

```
QuickSort(a, left, right) {
  if (right-left < threshold)
    InsertionSort(a, left, right)
  else
    pivot = ChoosePivot(a, left, right)
    part = Partition(a, pivot, left, right)
    QuickSort(a, left, part-1)
    QuickSort(a, part+1, right)
  endif
}
```

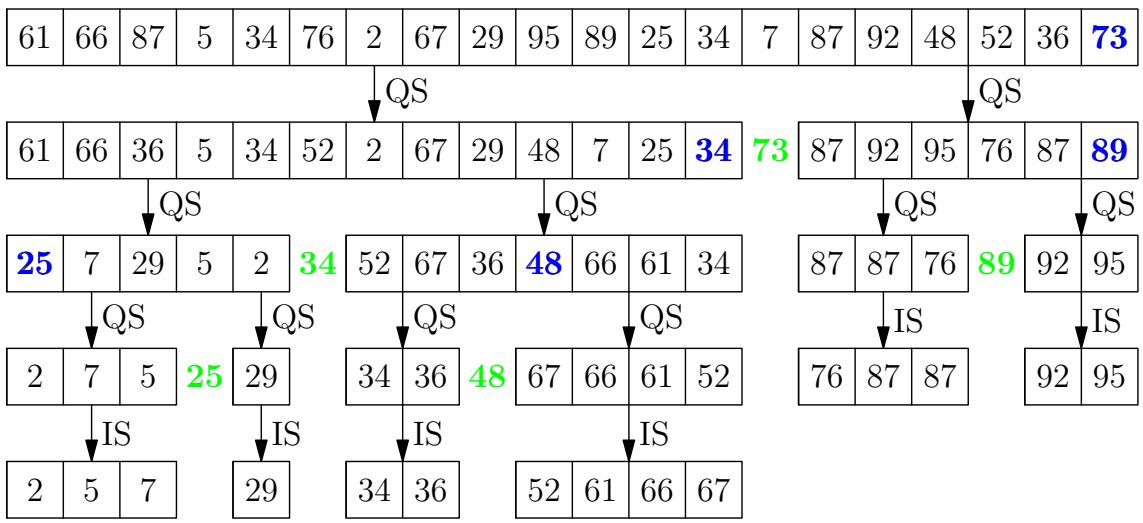

Time Complexity

- Partitioning an array of size n takes $\Theta(n)$ operations
- If we split the array in half then number of partitions we need to do is $\lceil \log_2(n) \rceil$
- This is the best case thus quicksort is $\Omega\left(n \log(n)\right)$
- If the pivot is the minimum element of the array then we have to partition $n - 1$ times
- This is the worst case so quicksort is $O\left(n^2\right)$
- This worst case will happen if the array is already sorted and we choose the pivot to be the first element in the array!

Time Complexity

- Partitioning an array of size n takes $\Theta(n)$ operations
- If we split the array in half then number of partitions we need to do is $\lceil \log_2(n) \rceil$
- This is the best case thus quicksort is $\Omega\left(n \log(n)\right)$
- If the pivot is the minimum element of the array then we have to partition $n - 1$ times
- This is the worst case so quicksort is $O\left(n^2\right)$
- This worst case will happen if the array is already sorted and we choose the pivot to be the first element in the array!

Time Complexity

- Partitioning an array of size n takes $\Theta(n)$ operations
- If we split the array in half then number of partitions we need to do is $\lceil \log_2(n) \rceil$
- This is the best case thus quicksort is $\Omega\left(n \log(n)\right)$
- If the pivot is the minimum element of the array then we have to partition $n - 1$ times
- This is the worst case so quicksort is $O\left(n^2\right)$
- This worst case will happen if the array is already sorted and we choose the pivot to be the first element in the array!

Time Complexity

- Partitioning an array of size n takes $\Theta(n)$ operations
- If we split the array in half then number of partitions we need to do is $\lceil \log_2(n) \rceil$
- This is the best case thus quicksort is $\Omega\left(n \log(n)\right)$
- If the pivot is the minimum element of the array then we have to partition $n - 1$ times
- This is the worst case so quicksort is $O\left(n^2\right)$
- This worst case will happen if the array is already sorted and we choose the pivot to be the first element in the array!

Time Complexity

- Partitioning an array of size n takes $\Theta(n)$ operations
- If we split the array in half then number of partitions we need to do is $\lceil \log_2(n) \rceil$
- This is the best case thus quicksort is $\Omega\left(n \log(n)\right)$
- If the pivot is the minimum element of the array then we have to partition $n - 1$ times
- This is the worst case so quicksort is $O\left(n^2\right)$
- This worst case will happen if the array is already sorted and we choose the pivot to be the first element in the array!

Time Complexity

- Partitioning an array of size n takes $\Theta(n)$ operations
- If we split the array in half then number of partitions we need to do is $\lceil \log_2(n) \rceil$
- This is the best case thus quicksort is $\Omega\left(n \log(n)\right)$
- If the pivot is the minimum element of the array then we have to partition $n - 1$ times
- This is the worst case so quicksort is $O\left(n^2\right)$
- This worst case will happen if the array is already sorted and we choose the pivot to be the first element in the array!

Sort in Practice

- The STL in C++ offers three sorts
  - ⋆ `sort()` implemented using quicksort
  - ⋆ `stable_sort()` implemented using mergesort
  - ⋆ `partial_sort()` implemented using heapsort
- Java uses
  - ⋆ Quicksort to sort arrays of primitive types
  - ⋆ Mergesort to sort Collections of objects
- Quicksort is typically fastest but has worst case quadratic time complexity

Sort in Practice

- The STL in C++ offers three sorts
  - ⋆ `sort()` implemented using quicksort
  - ⋆ `stable_sort()` implemented using mergesort
  - ⋆ `partial_sort()` implemented using heapsort
- Java uses
  - ⋆ Quicksort to sort arrays of primitive types
  - ⋆ Mergesort to sort Collections of objects
- Quicksort is typically fastest but has worst case quadratic time complexity

Sort in Practice

- The STL in C++ offers three sorts
  - ⋆ `sort()` implemented using quicksort
  - ⋆ `stable_sort()` implemented using mergesort
  - ⋆ `partial_sort()` implemented using heapsort
- Java uses
  - ⋆ Quicksort to sort arrays of primitive types
  - ⋆ Mergesort to sort Collections of objects
- Quicksort is typically fastest but has worst case quadratic time complexity

Sort in Practice

- The STL in C++ offers three sorts
  - ⋆ `sort()` implemented using quicksort
  - ⋆ `stable_sort()` implemented using mergesort
  - ⋆ `partial_sort()` implemented using heapsort
- Java uses
  - ⋆ Quicksort to sort arrays of primitive types
  - ⋆ Mergesort to sort Collections of objects
- Quicksort is typically fastest but has worst case quadratic time complexity

Sort in Practice

- The STL in C++ offers three sorts
  - ⋆ `sort()` implemented using quicksort
  - ⋆ `stable_sort()` implemented using mergesort
  - ⋆ `partial_sort()` implemented using heapsort
- Java uses
  - ⋆ Quicksort to sort arrays of primitive types
  - ⋆ Mergesort to sort Collections of objects
- Quicksort is typically fastest but has worst case quadratic time complexity

Sort in Practice

- The STL in C++ offers three sorts
  - ⋆ `sort()` implemented using quicksort
  - ⋆ `stable_sort()` implemented using mergesort
  - ⋆ `partial_sort()` implemented using heapsort
- Java uses
  - ⋆ Quicksort to sort arrays of primitive types
  - ⋆ Mergesort to sort Collections of objects
- Quicksort is typically fastest but has worst case quadratic time complexity

Selection

- A related problem to sorting is selection
- That is we want to select the kth largest element
- We could do this by first sorting the array
- A full sort is not however necessary—we can use a modified quicksort where we only continue to sort the part of the array we are interested in
- This leads to a $\Theta(n \log(n))$ algorithm which is considerably faster then sorting

Selection

- A related problem to sorting is selection
- That is we want to select the kth largest element
- We could do this by first sorting the array
- A full sort is not however necessary—we can use a modified quicksort where we only continue to sort the part of the array we are interested in
- This leads to a $\Theta(n \log(n))$ algorithm which is considerably faster then sorting

Selection

- A related problem to sorting is selection
- That is we want to select the kth largest element
- We could do this by first sorting the array
- A full sort is not however necessary—we can use a modified quicksort where we only continue to sort the part of the array we are interested in
- This leads to a $\Theta(n \log(n))$ algorithm which is considerably faster then sorting

Selection

- A related problem to sorting is selection
- That is we want to select the kth largest element
- We could do this by first sorting the array
- A full sort is not however necessary—we can use a modified quicksort where we only continue to sort the part of the array we are interested in
- This leads to a $\Theta(n \log(n))$ algorithm which is considerably faster then sorting

Selection

- A related problem to sorting is selection
- That is we want to select the kth largest element
- We could do this by first sorting the array
- A full sort is not however necessary—we can use a modified quicksort where we only continue to sort the part of the array we are interested in
- This leads to a $\Theta(n \log(n))$ algorithm which is considerably faster then sorting

Selection

- A related problem to sorting is selection
- That is we want to select the kth largest element
- We could do this by first sorting the array
- A full sort is not however necessary—we can use a modified quicksort where we only continue to sort the part of the array we are interested in
- This leads to a $\Theta(n \log(n))$ algorithm which is considerably faster then sorting

Outline

1. Merge Sort
2. Quick Sort
3. **Radix Sort**

Radix Sort

- Can we get a sort algorithm to run faster than $O\left(n\log(n)\right)$?
- Our proof that this was optimal assumed we were performing binary decisions (is a_i less than a_j?)
- If we don't perform pairwise comparisons then the proof doesn't apply
- Radix sort is the classic example of a sort algorithm that doesn't use pairwise comparisons

Radix Sort

- Can we get a sort algorithm to run faster than $O\left(n\log(n)\right)$?
- Our proof that this was optimal assumed we were performing binary decisions (is a_i less than a_j?)
- If we don't perform pairwise comparisons then the proof doesn't apply
- Radix sort is the classic example of a sort algorithm that doesn't use pairwise comparisons

Radix Sort

- Can we get a sort algorithm to run faster than $O\left(n\log(n)\right)$?
- Our proof that this was optimal assumed we were performing binary decisions (is a_i less than a_j?)
- If we don't perform pairwise comparisons then the proof doesn't apply
- Radix sort is the classic example of a sort algorithm that doesn't use pairwise comparisons

Radix Sort

- Can we get a sort algorithm to run faster than $O\left(n\log(n)\right)$?
- Our proof that this was optimal assumed we were performing binary decisions (is a_i less than a_j?)
- If we don't perform pairwise comparisons then the proof doesn't apply
- Radix sort is the classic example of a sort algorithm that doesn't use pairwise comparisons

Sorting Into Buckets

- The idea behind radix sort is to sort the elements of an array into some number of buckets
- This is done successively until the whole array is sorted
- Consider sorting integers in decimals (base 10 or radix 10)
- We can successively sort on the digits
- The sort finishes when we have got through all the digits

Sorting Into Buckets

- The idea behind radix sort is to sort the elements of an array into some number of buckets
- This is done successively until the whole array is sorted
- Consider sorting integers in decimals (base 10 or radix 10)
- We can successively sort on the digits
- The sort finishes when we have got through all the digits

Sorting Into Buckets

- The idea behind radix sort is to sort the elements of an array into some number of buckets
- This is done successively until the whole array is sorted
- Consider sorting integers in decimals (base 10 or radix 10)
- We can successively sort on the digits
- The sort finishes when we have got through all the digits

Sorting Into Buckets

- The idea behind radix sort is to sort the elements of an array into some number of buckets
- This is done successively until the whole array is sorted
- Consider sorting integers in decimals (base 10 or radix 10)
- We can successively sort on the digits
- The sort finishes when we have got through all the digits

Sorting Into Buckets

- The idea behind radix sort is to sort the elements of an array into some number of buckets
- This is done successively until the whole array is sorted
- Consider sorting integers in decimals (base 10 or radix 10)
- We can successively sort on the digits
- The sort finishes when we have got through all the digits

Radix Sort in Action

43
37
79
51
52
13
11
26
51
29

0	null
1	null
2	null
3	null
4	null
5	null
6	null
7	null
8	null
9	null

Radix Sort in Action

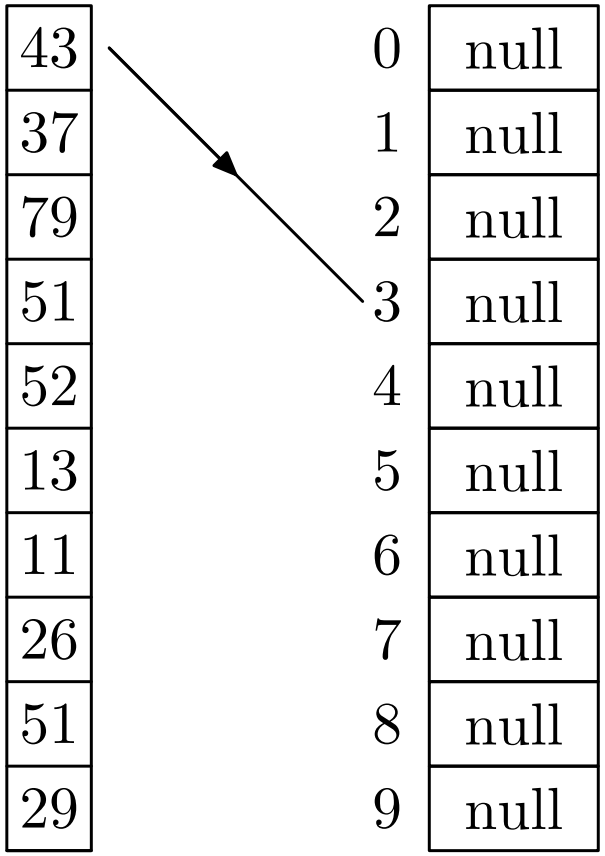

Radix Sort in Action

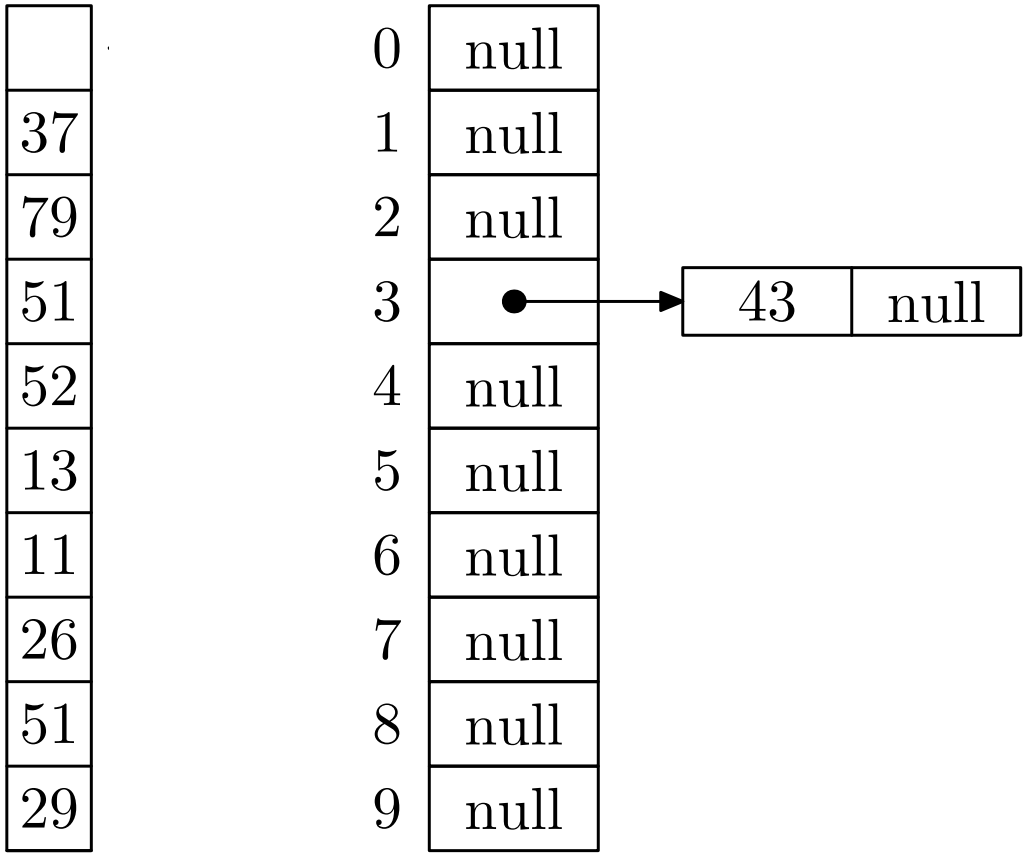

Radix Sort in Action

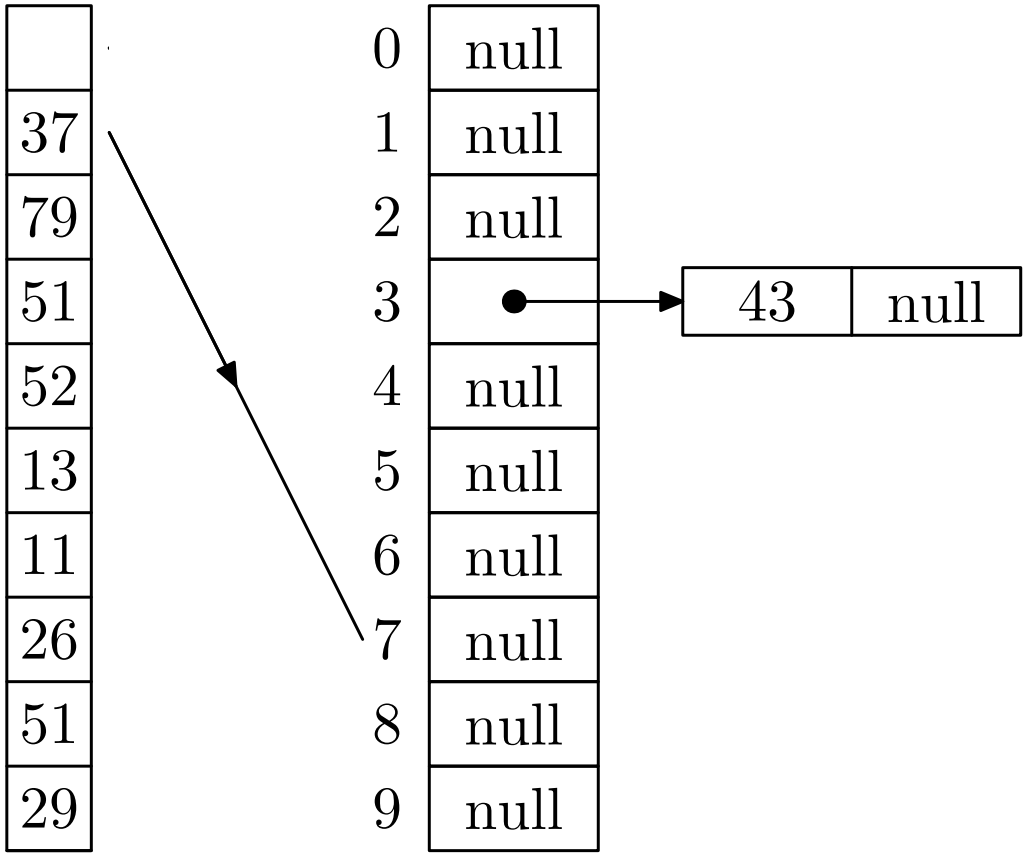

Radix Sort in Action

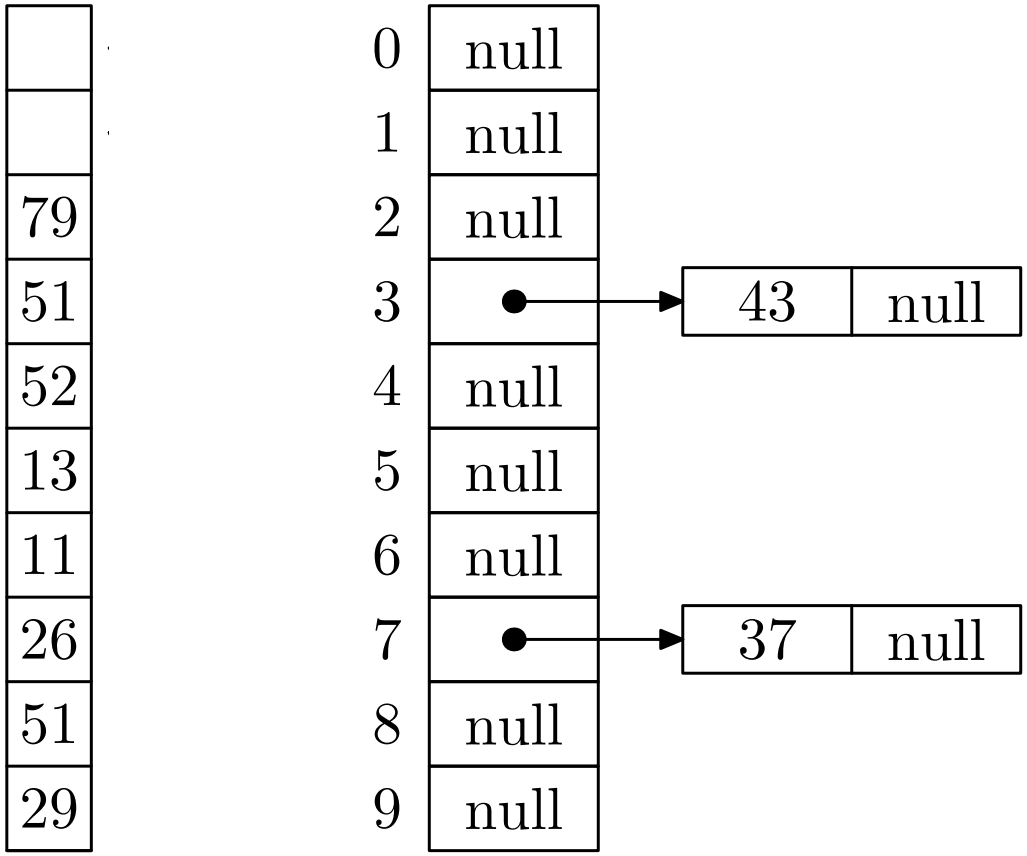

Radix Sort in Action

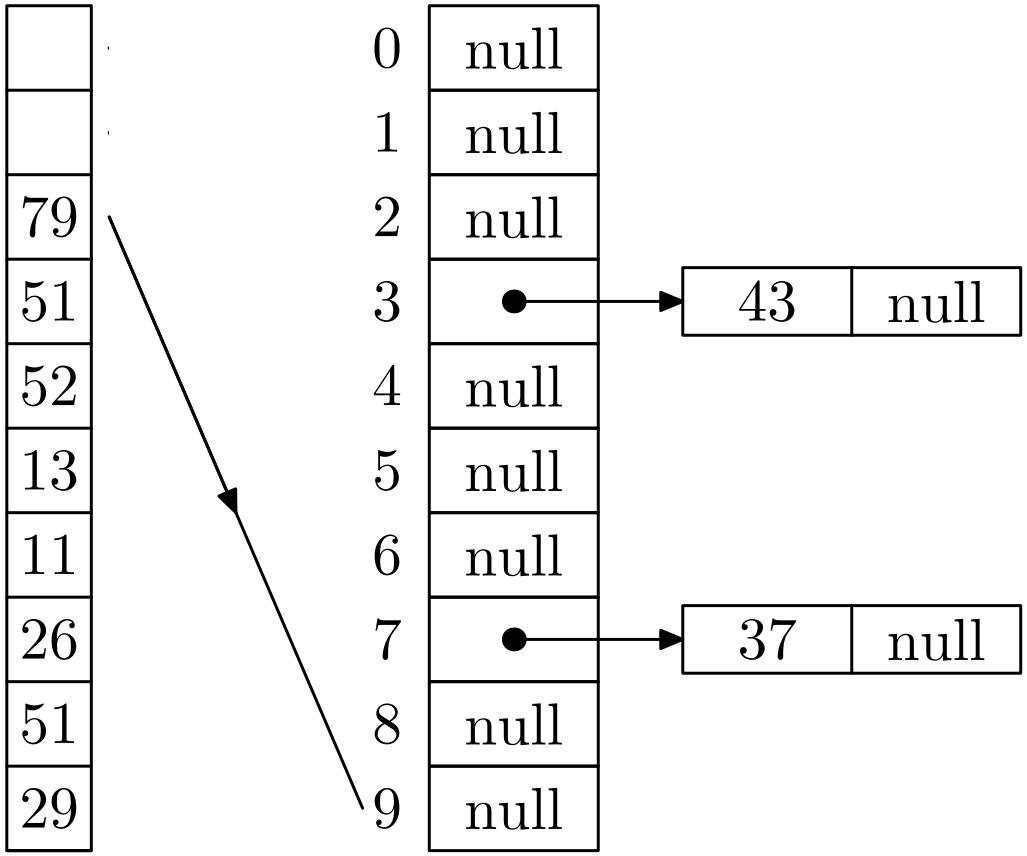

Radix Sort in Action

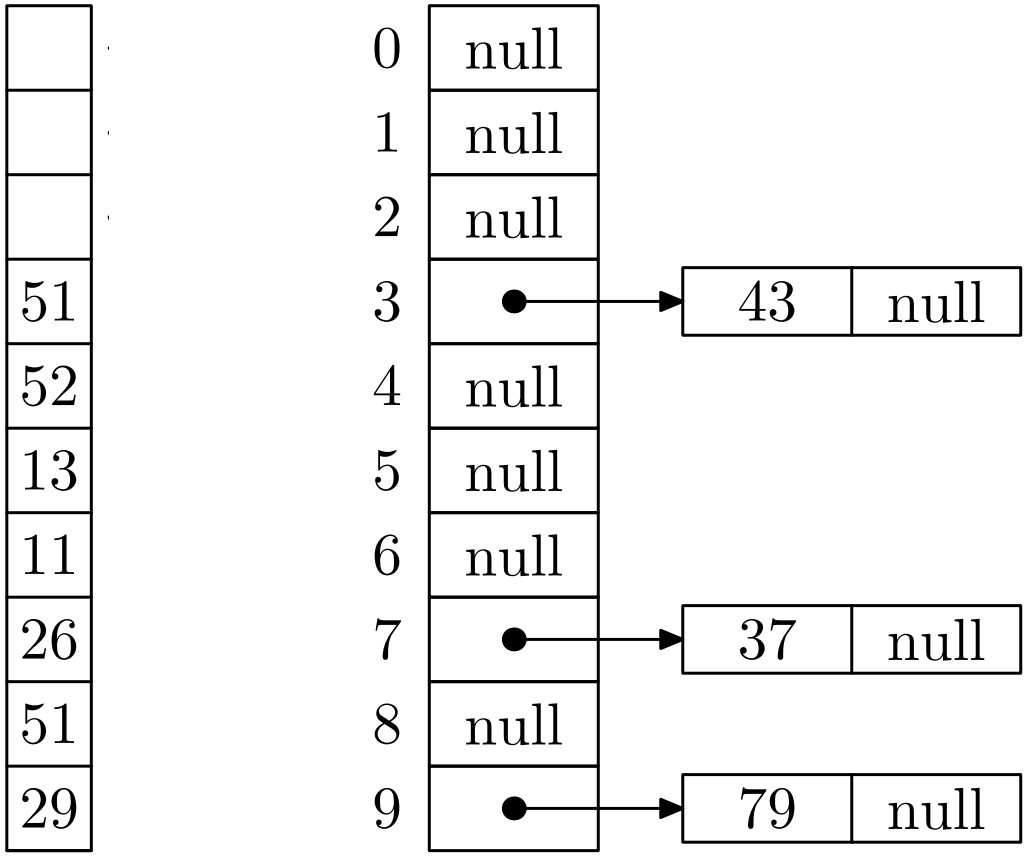

Radix Sort in Action

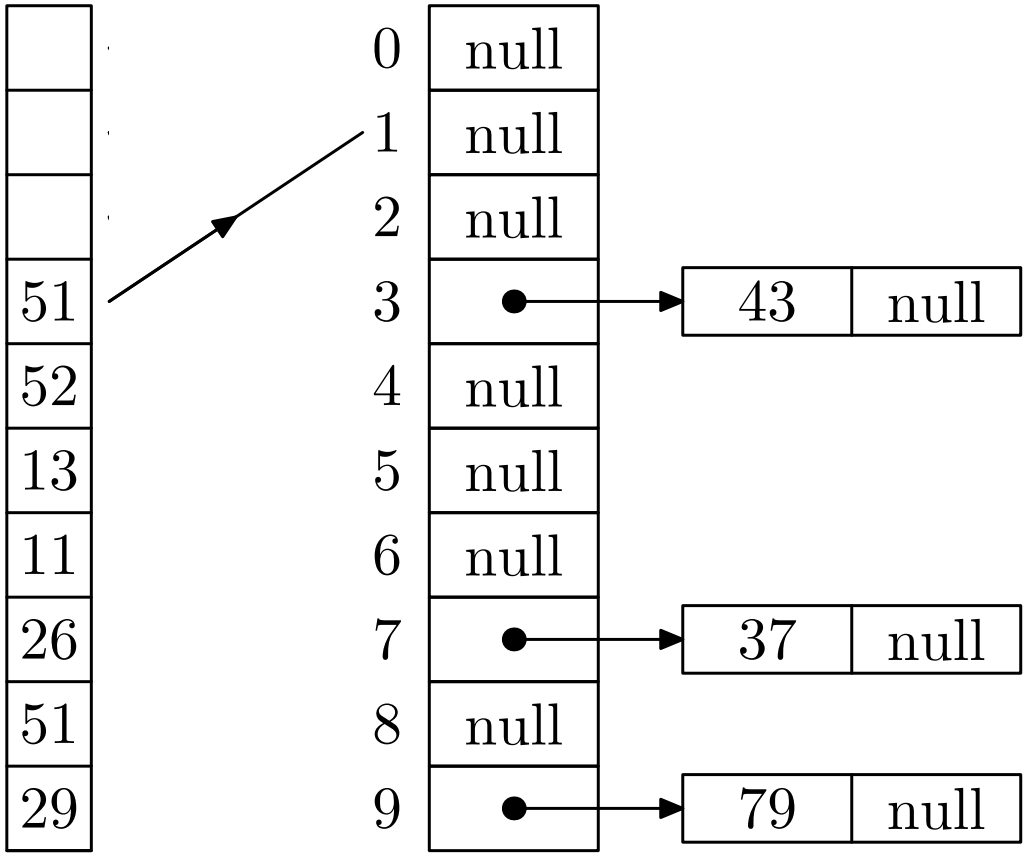

Radix Sort in Action

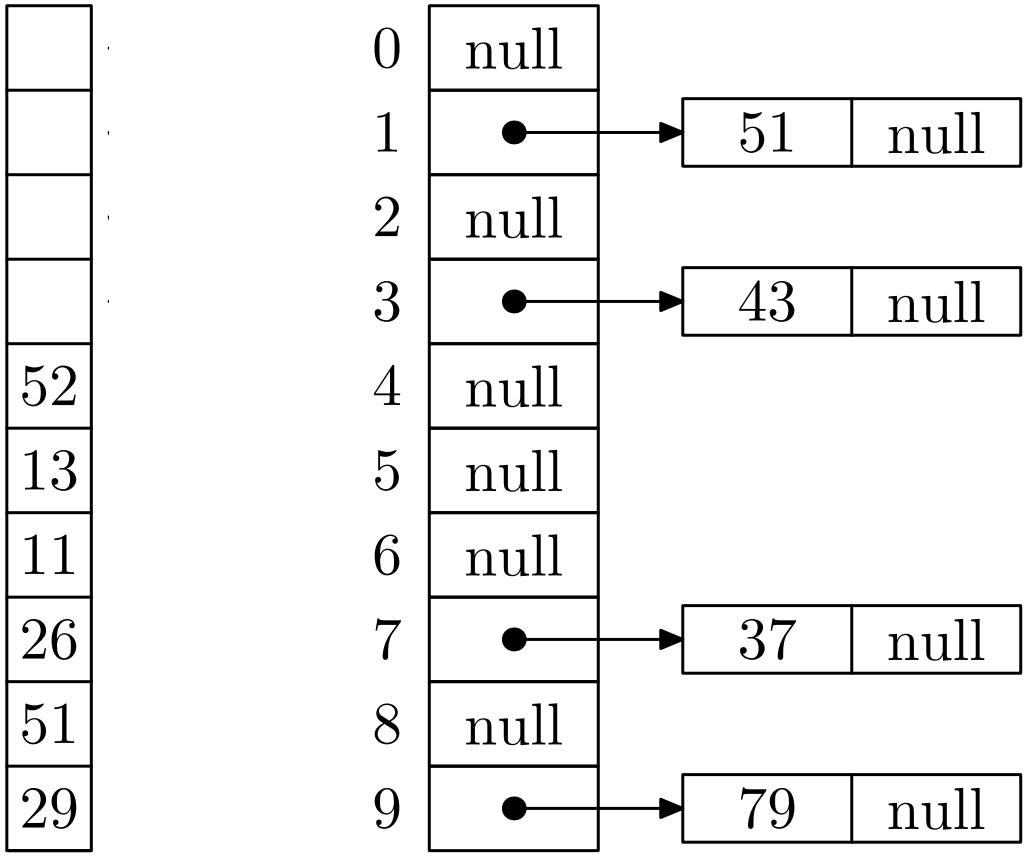

Radix Sort in Action

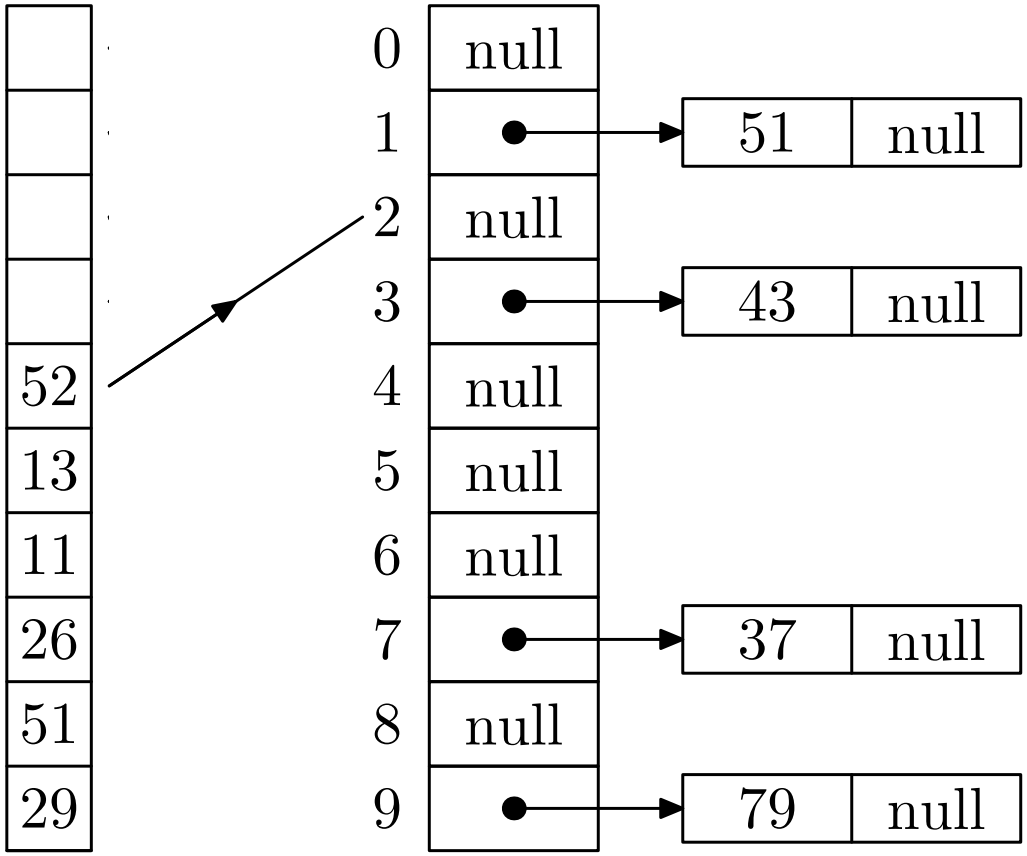

Radix Sort in Action

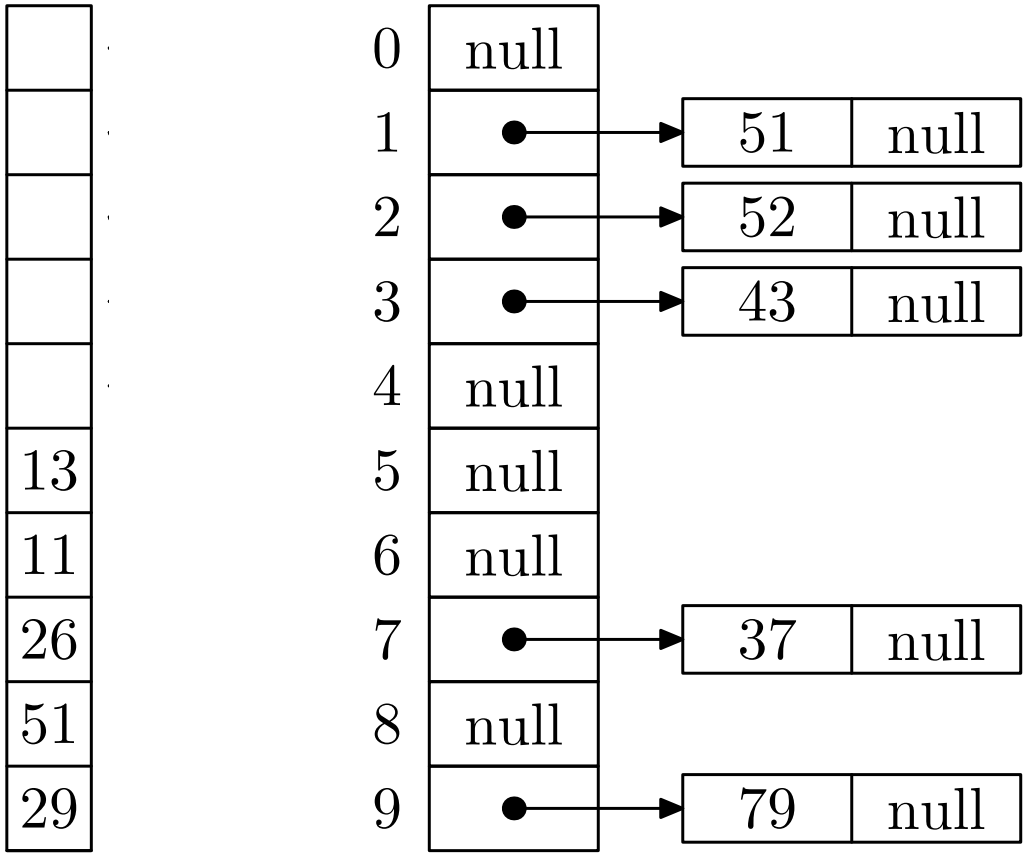

Radix Sort in Action

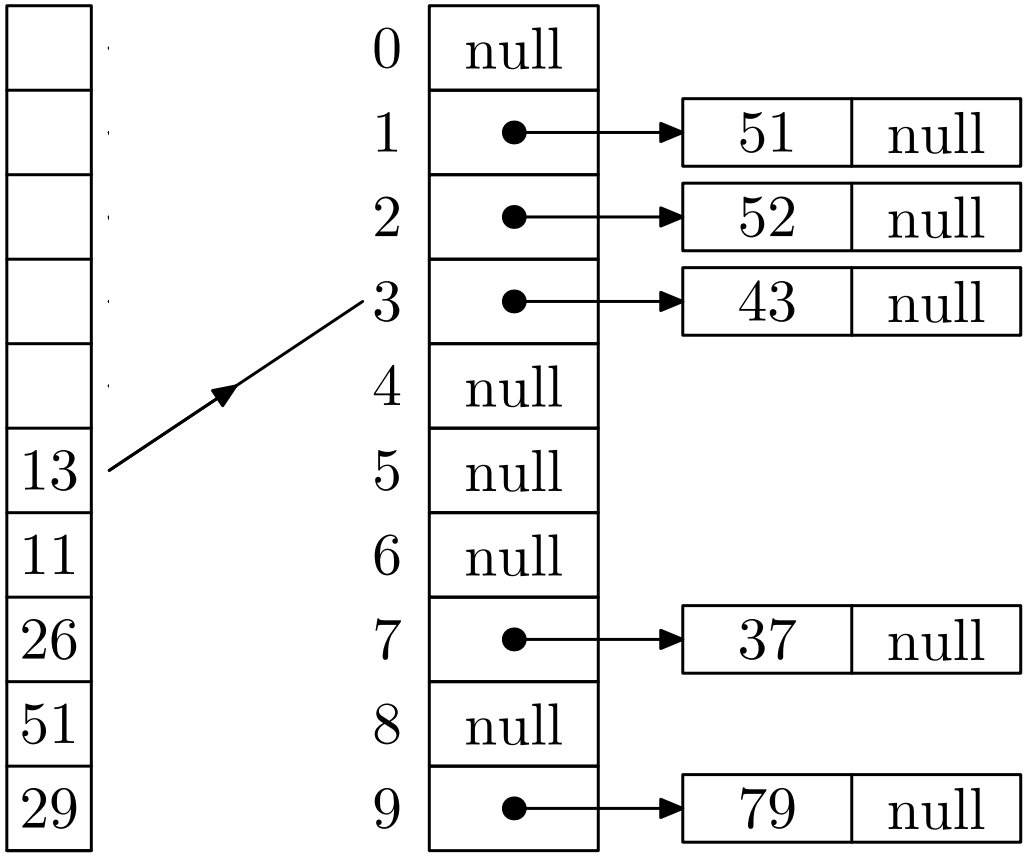

Radix Sort in Action

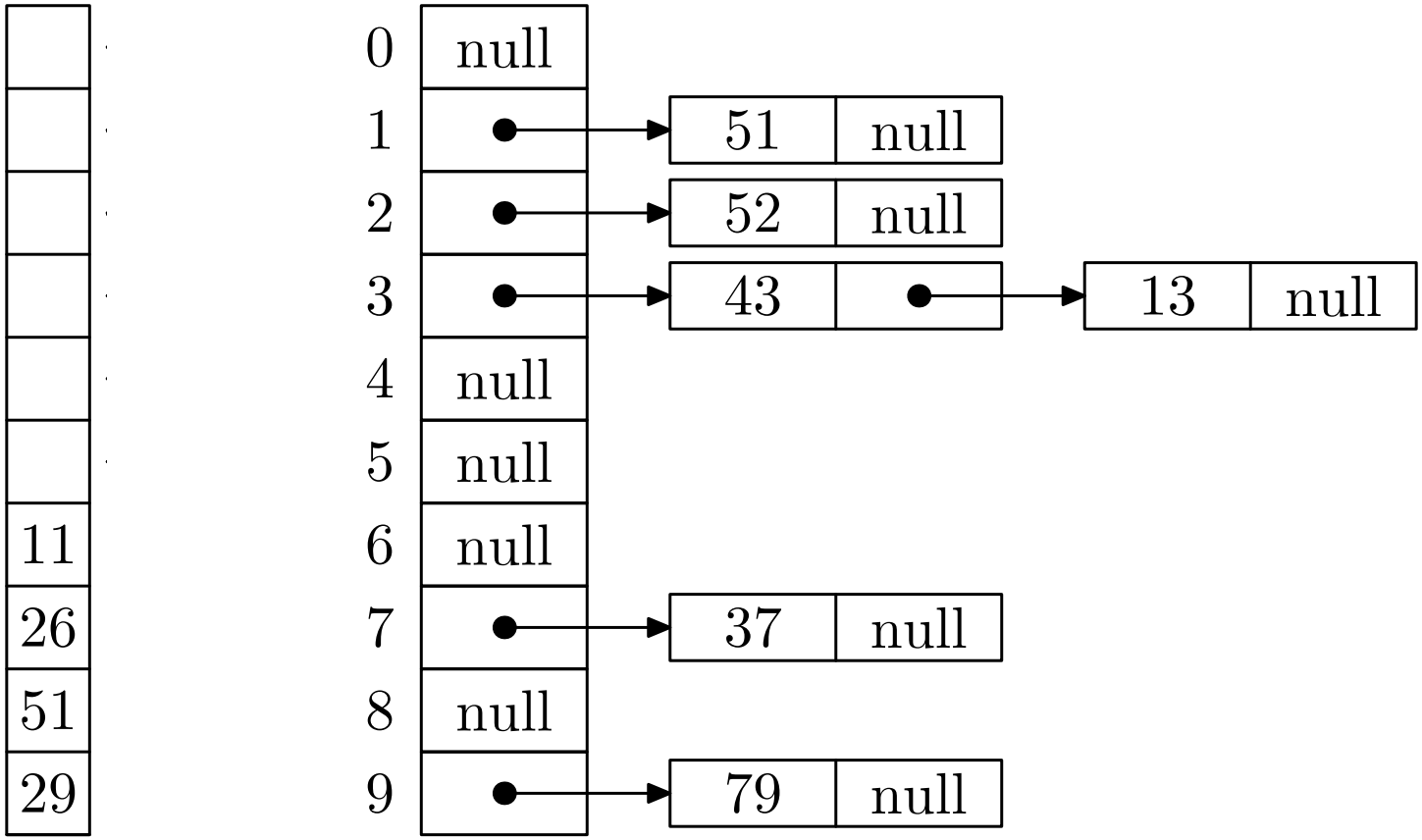

Radix Sort in Action

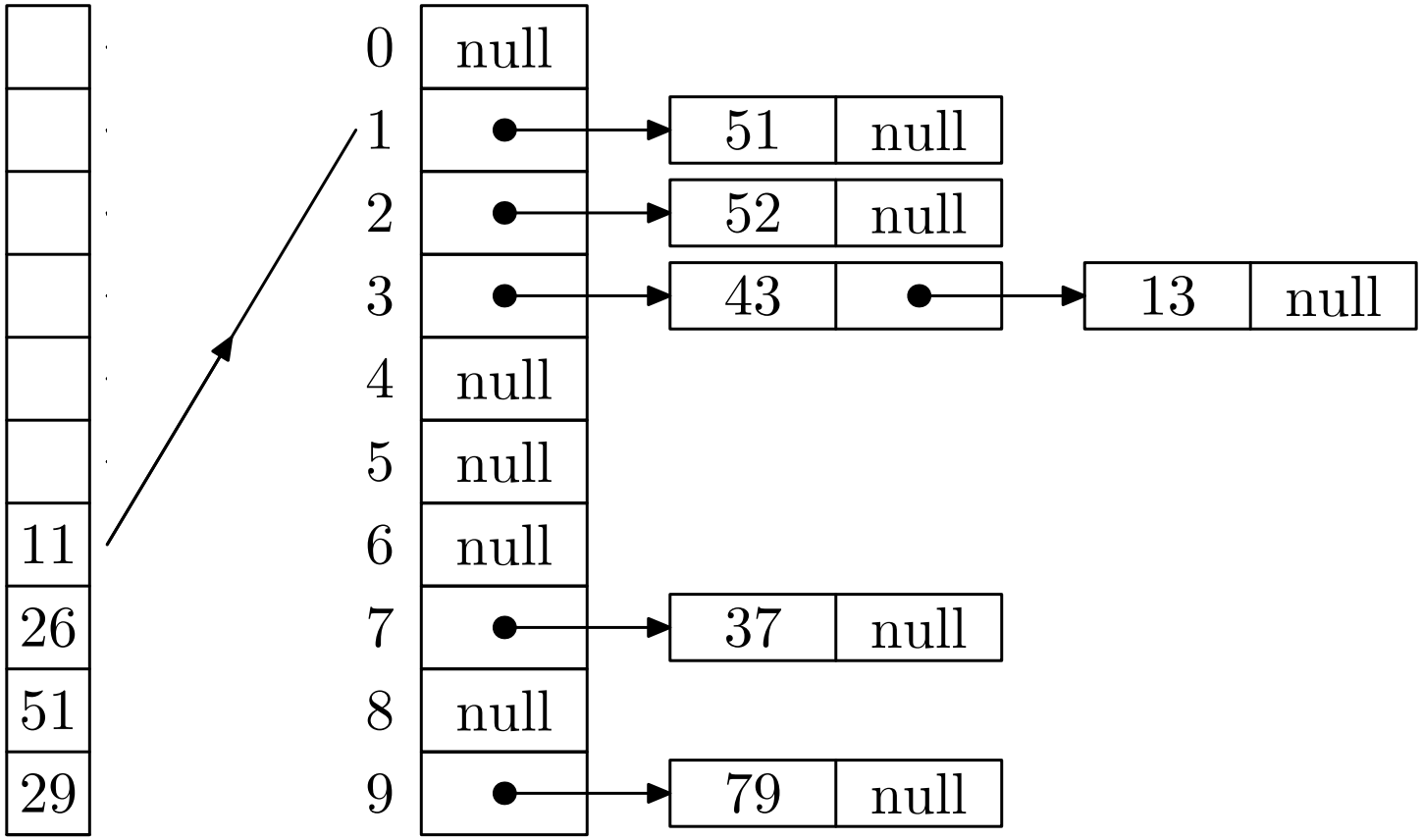

Radix Sort in Action

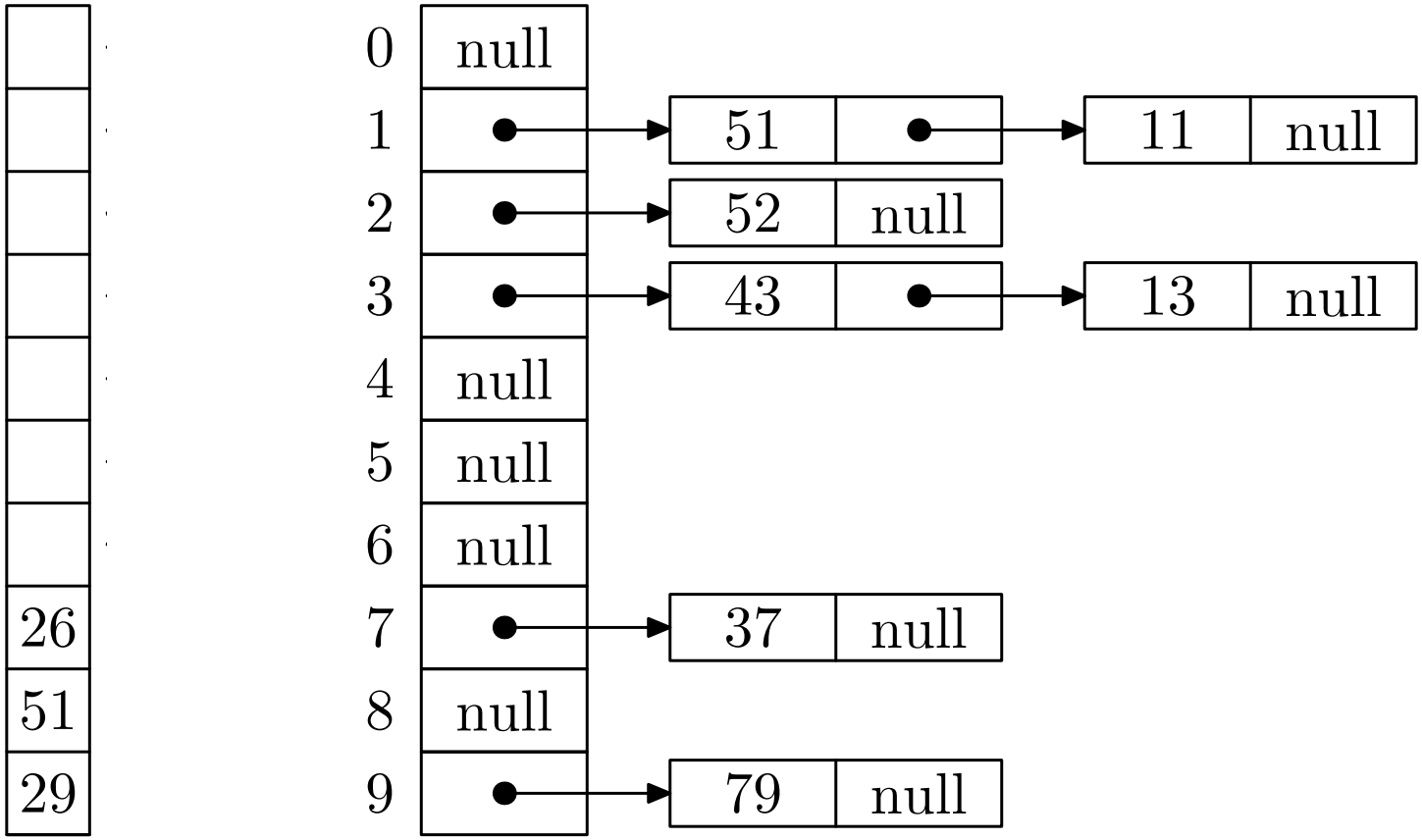

Radix Sort in Action

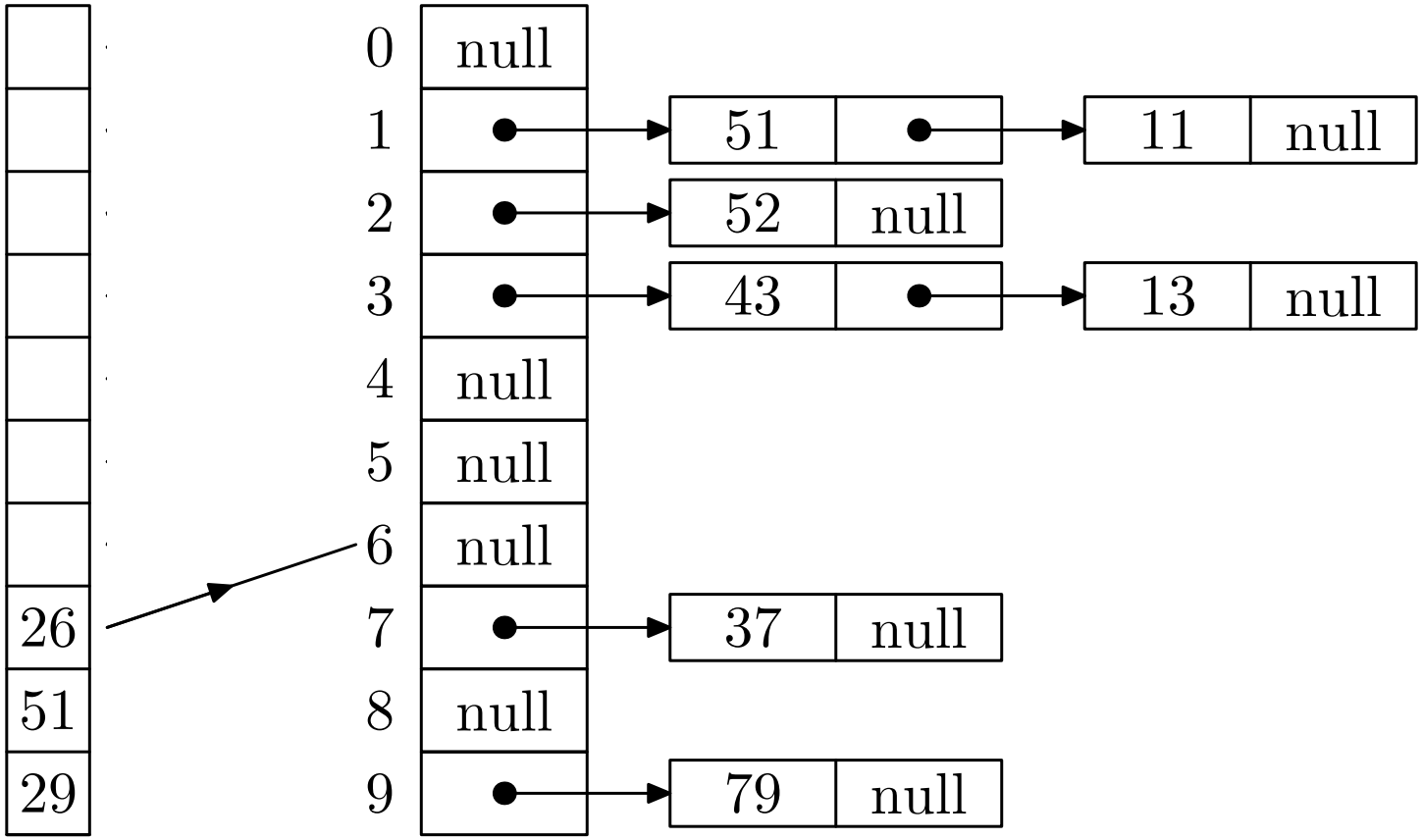

Radix Sort in Action

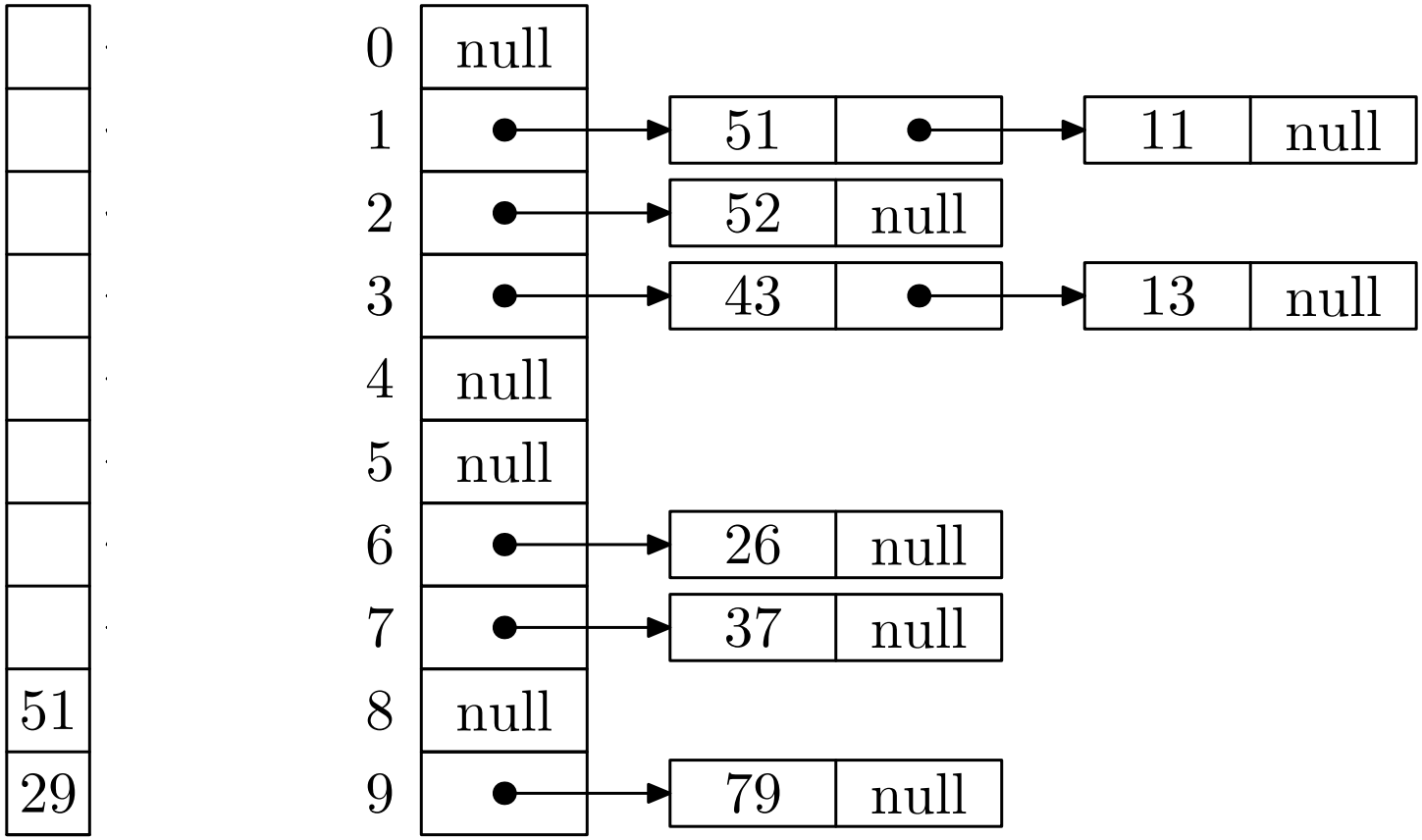

Radix Sort in Action

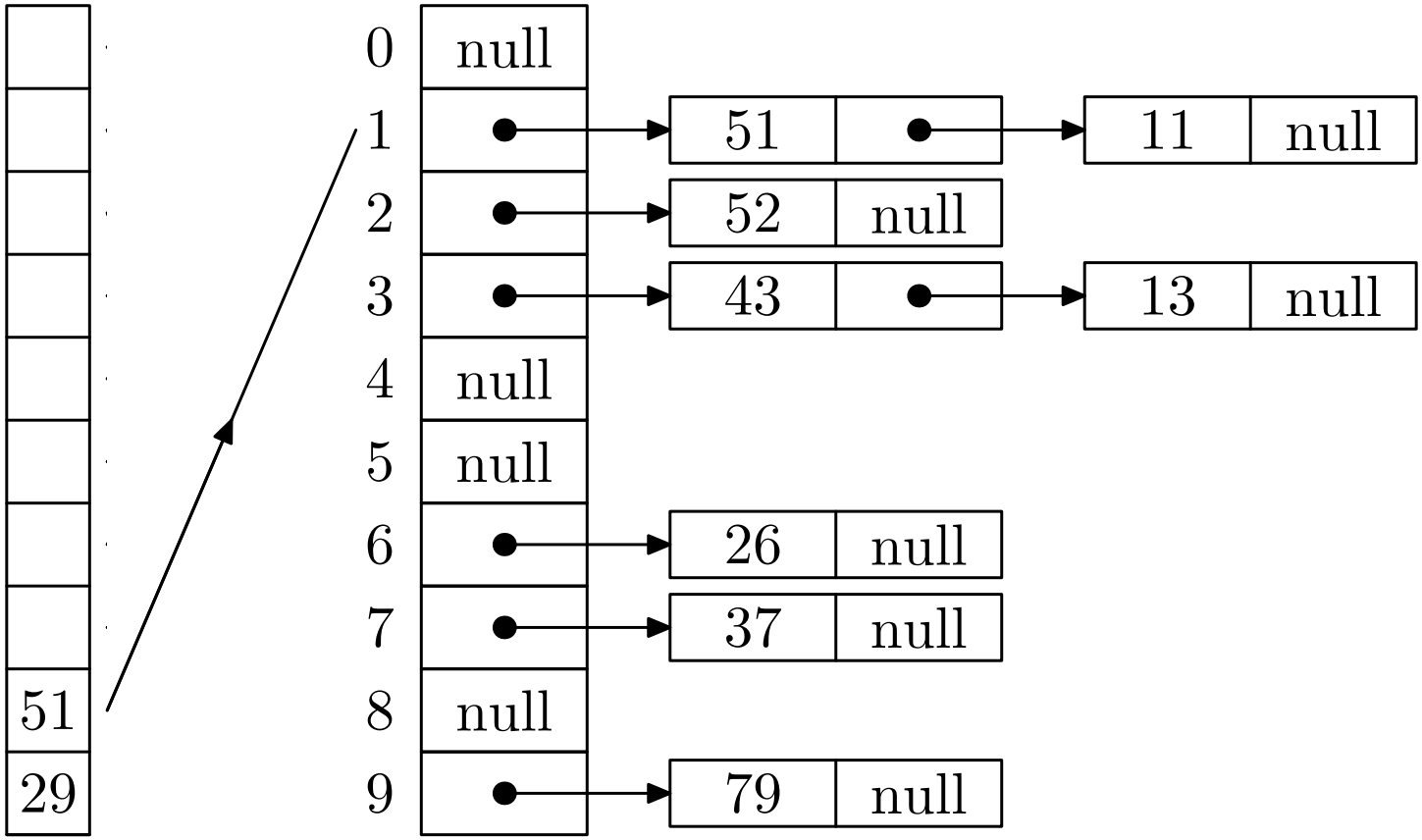

Radix Sort in Action

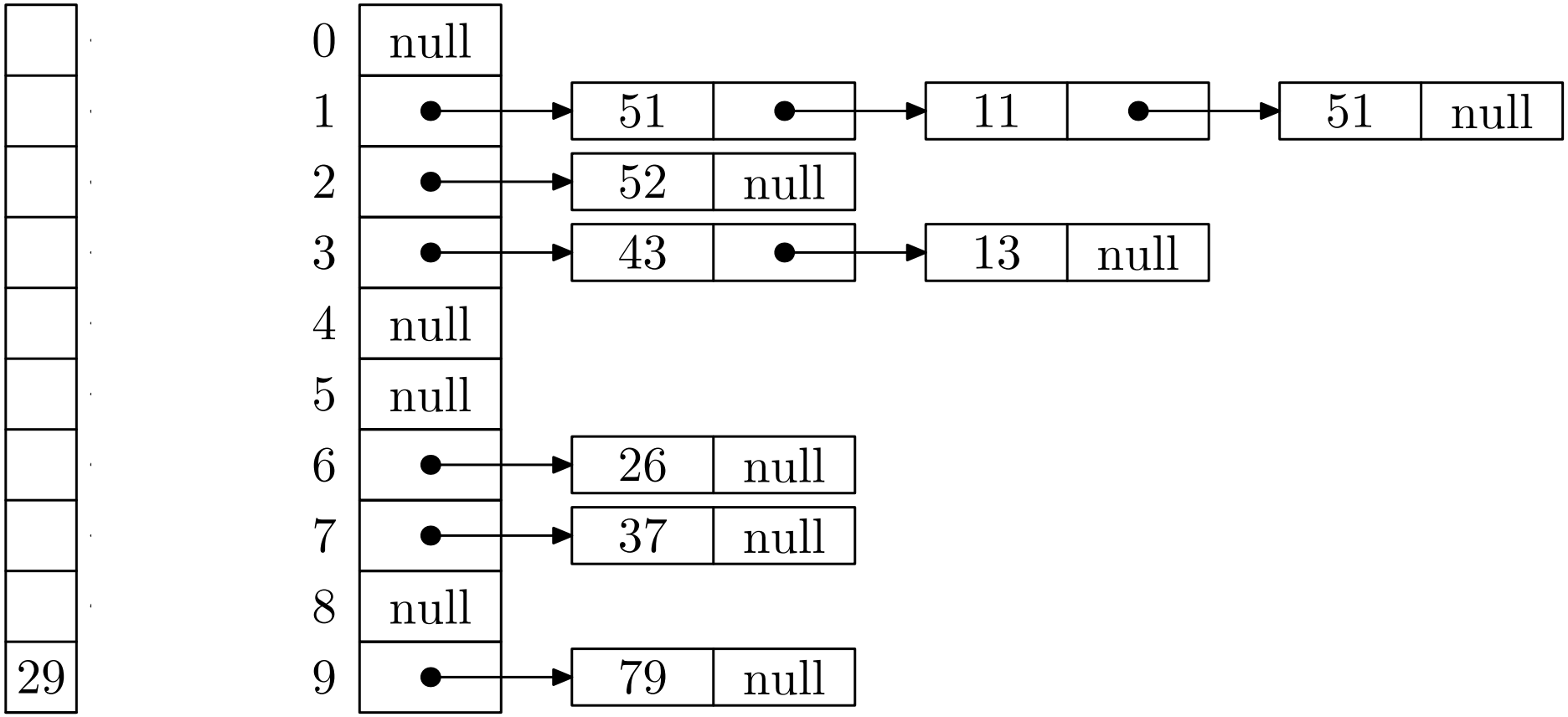

Radix Sort in Action

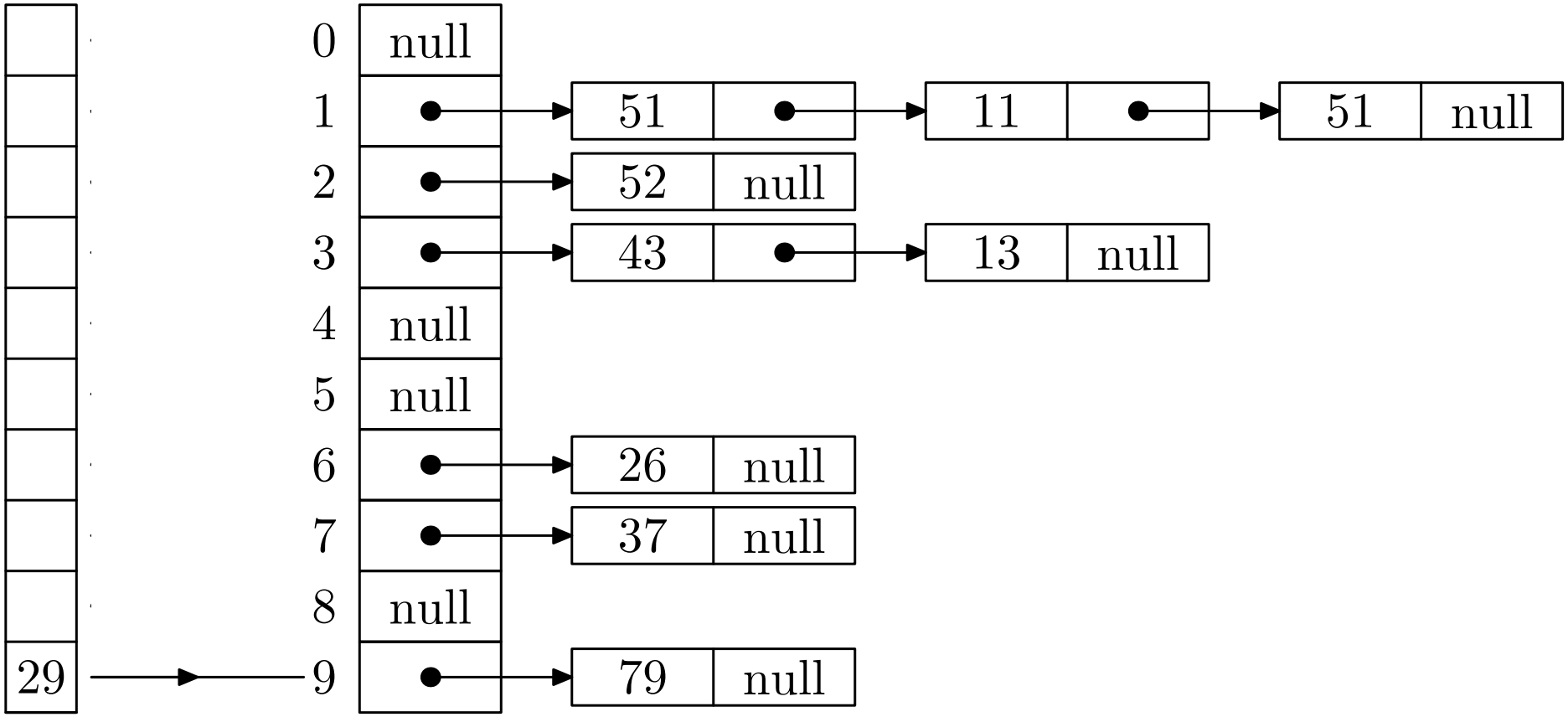

Radix Sort in Action

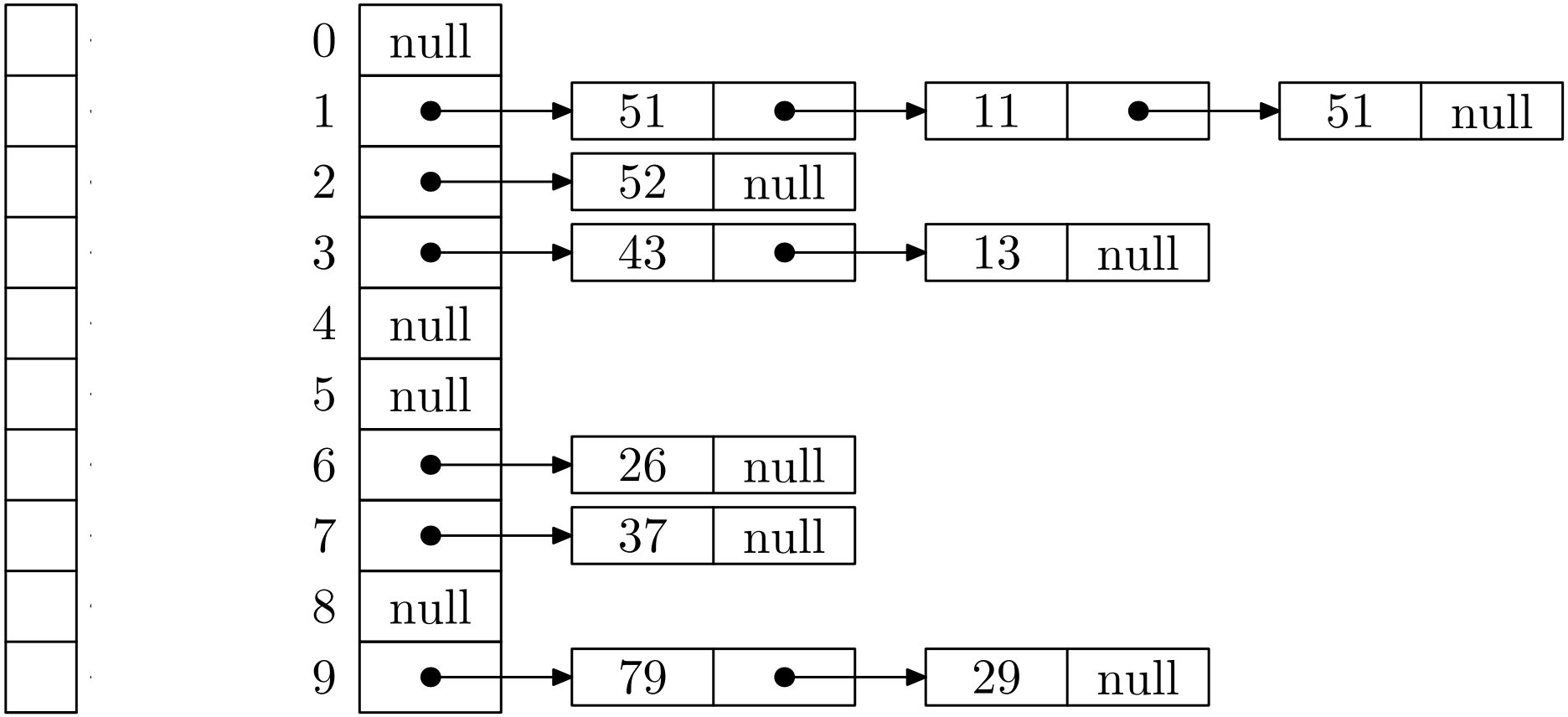

Radix Sort in Action

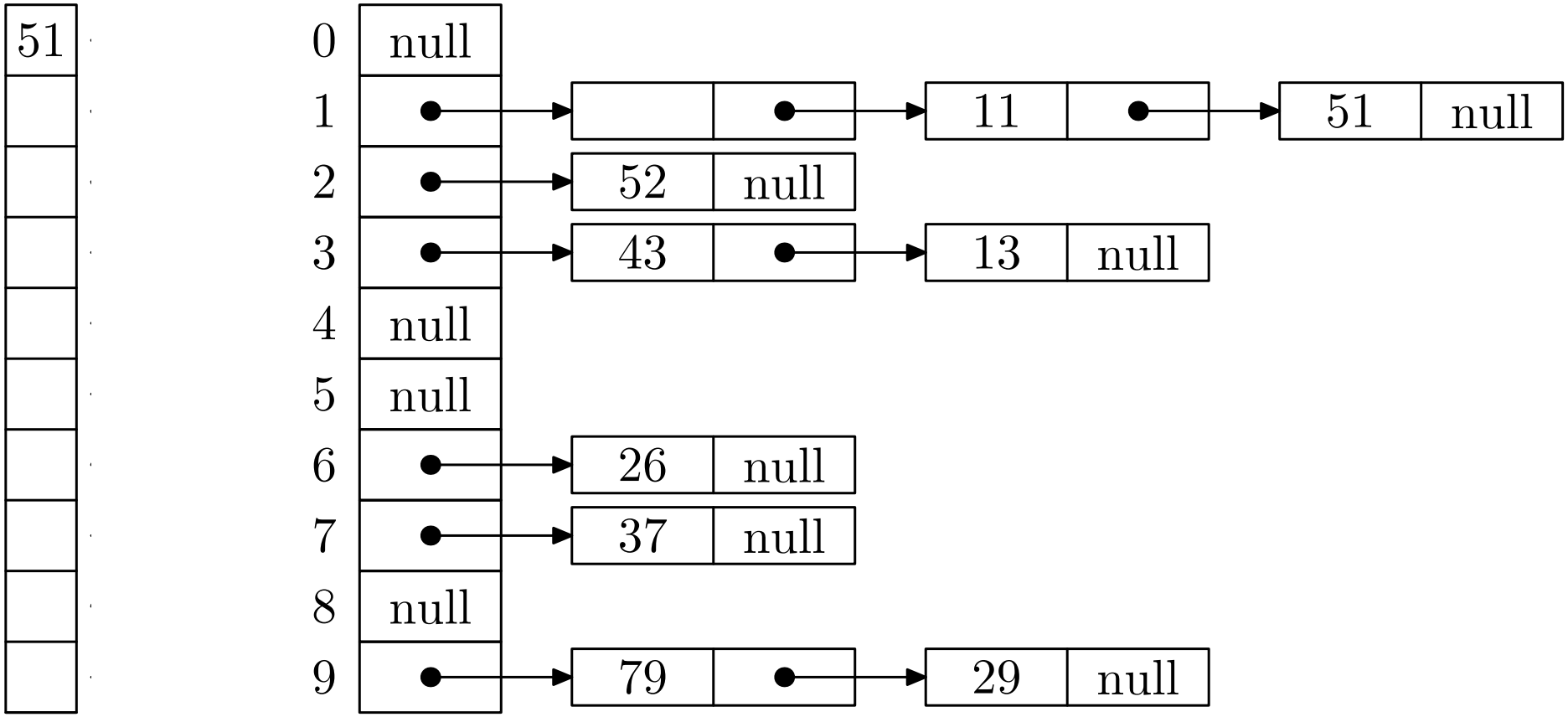

Radix Sort in Action

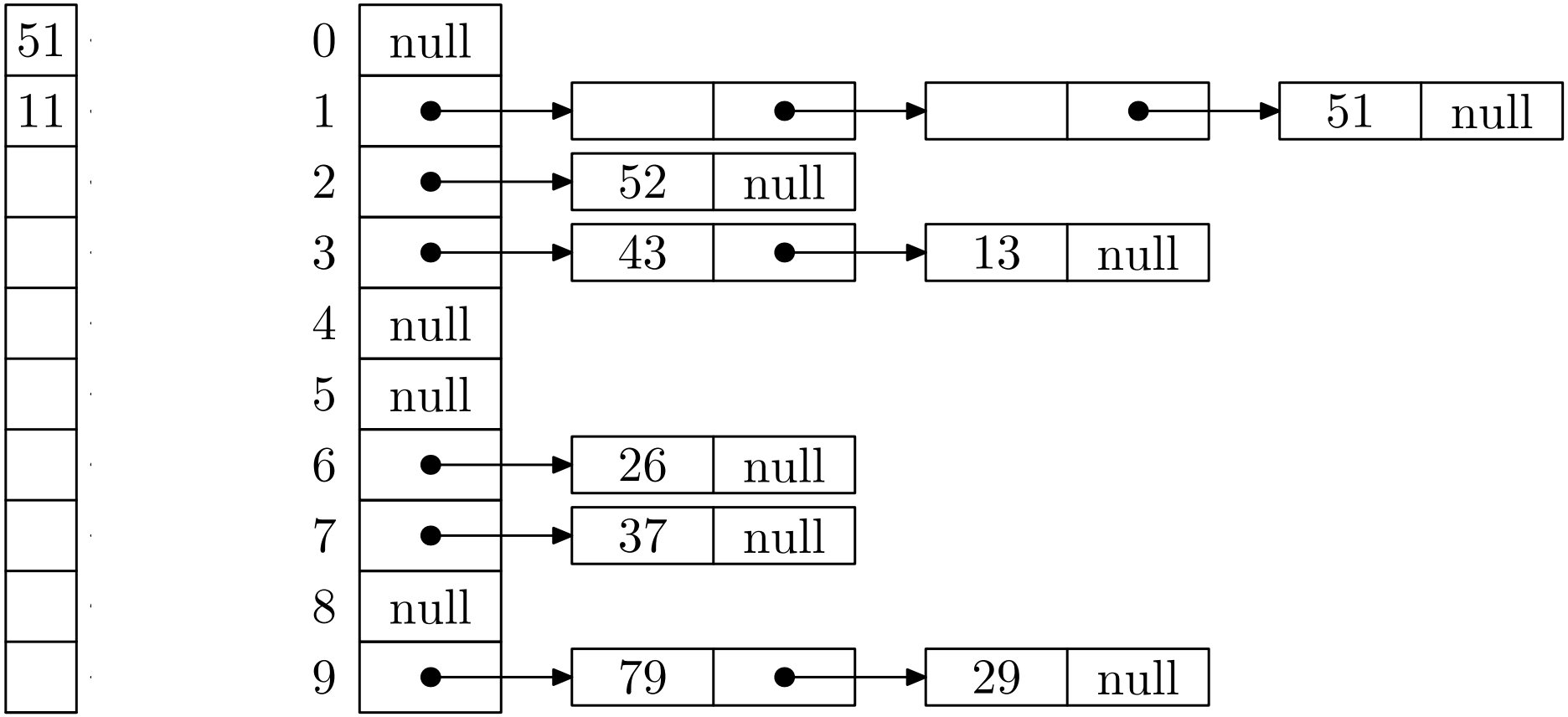

Radix Sort in Action

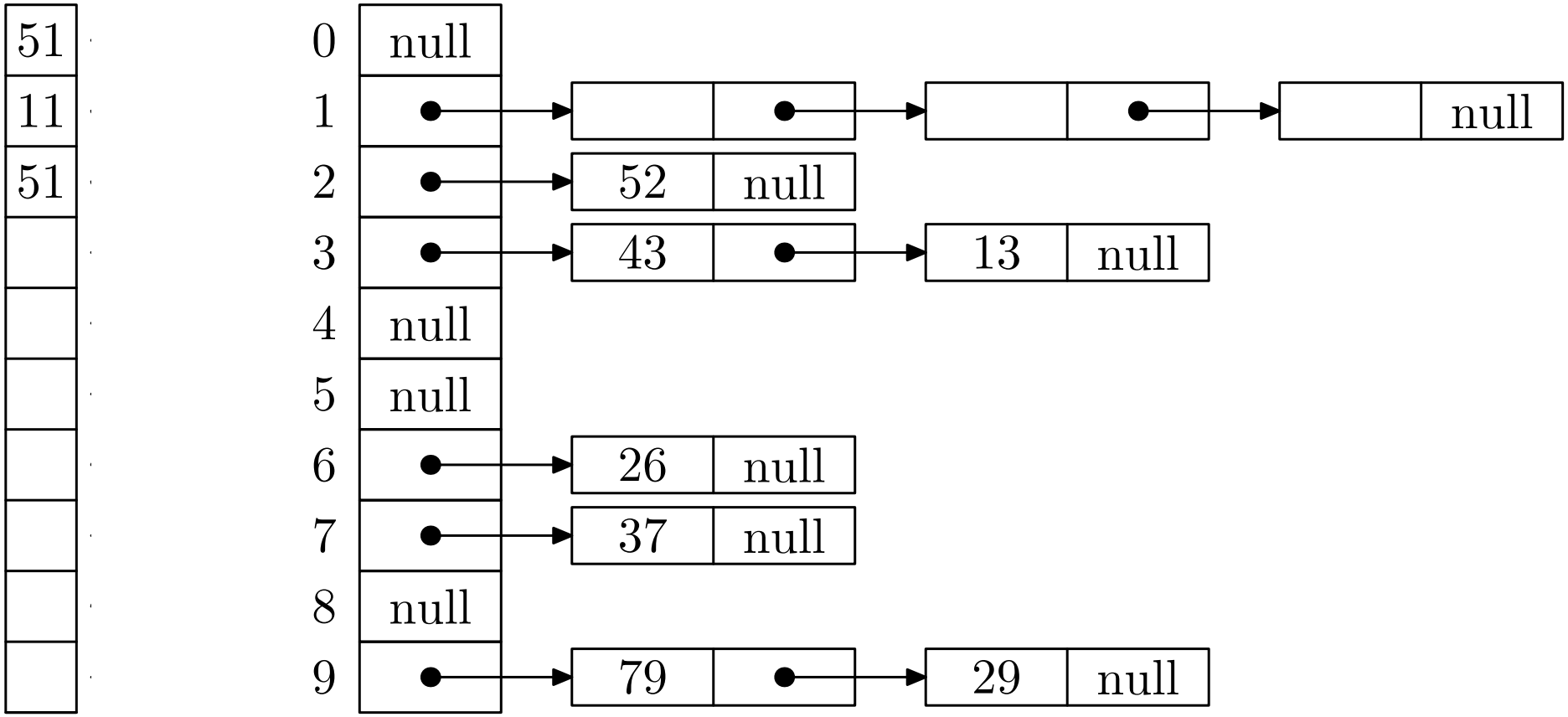

Radix Sort in Action

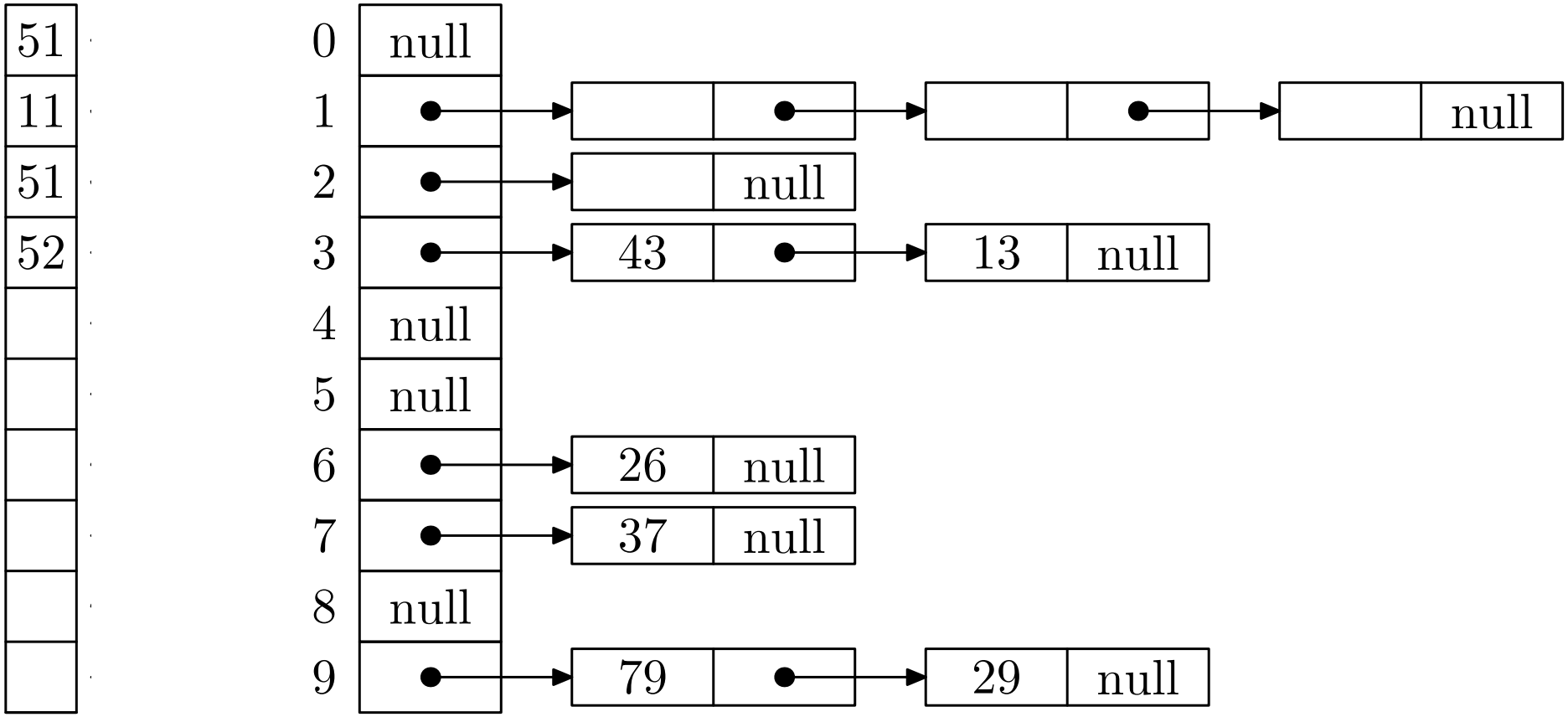

Radix Sort in Action

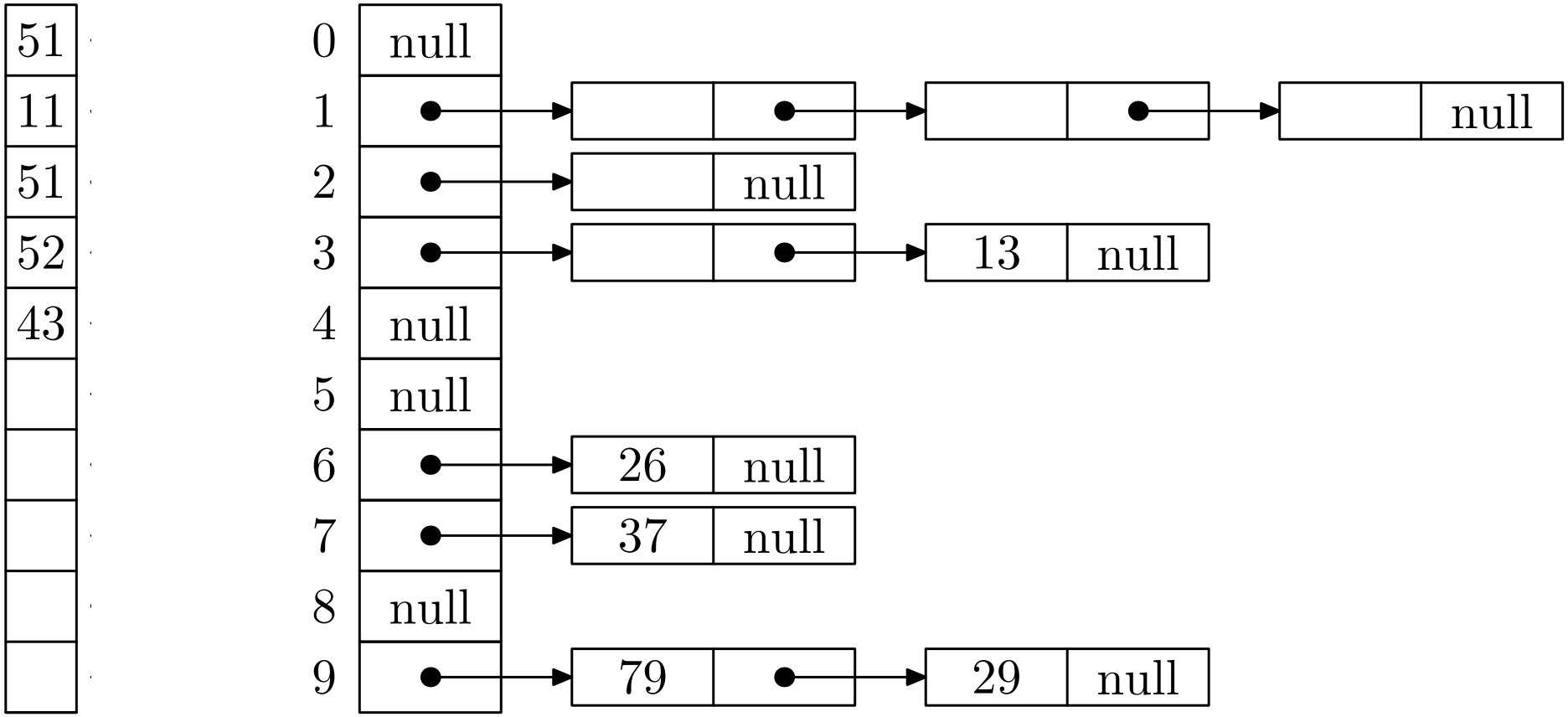

Radix Sort in Action

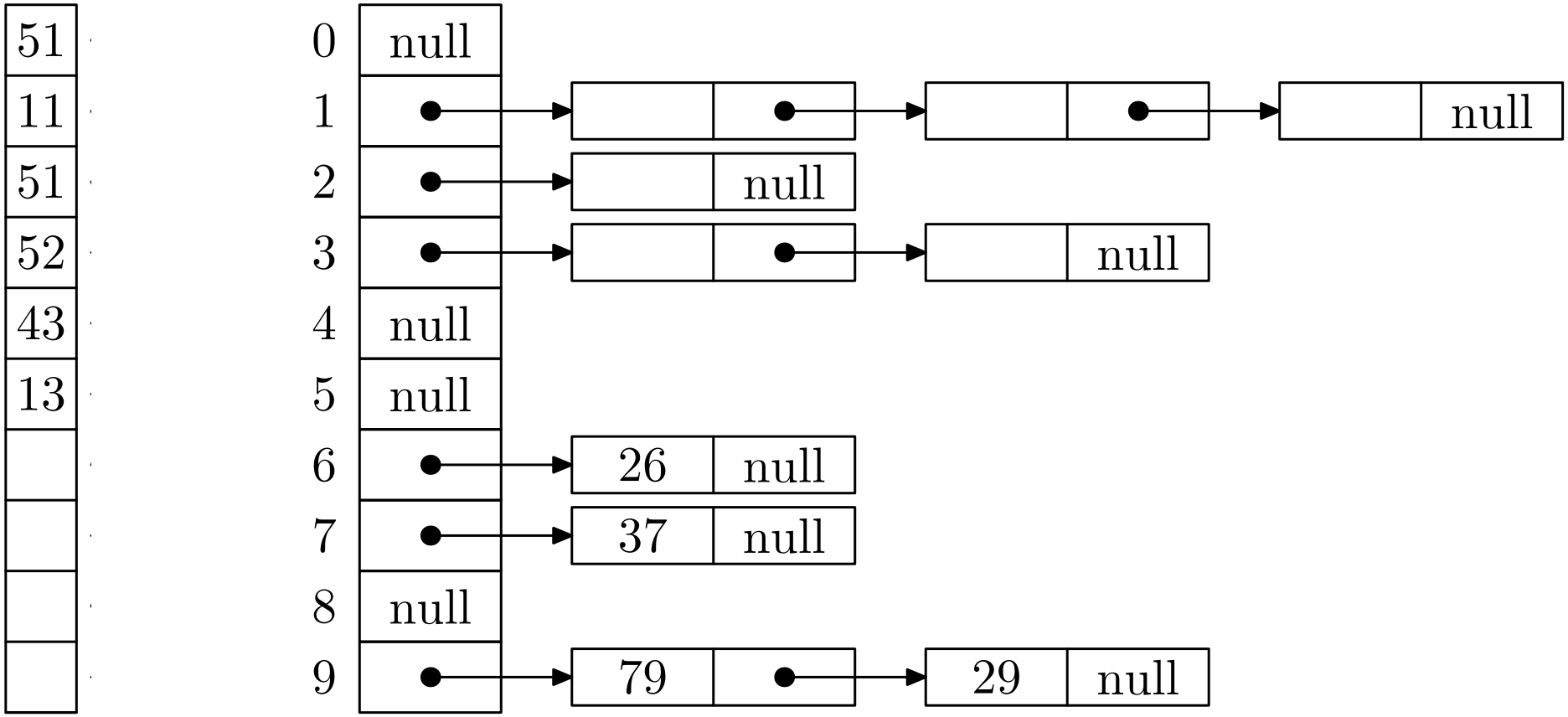

Radix Sort in Action

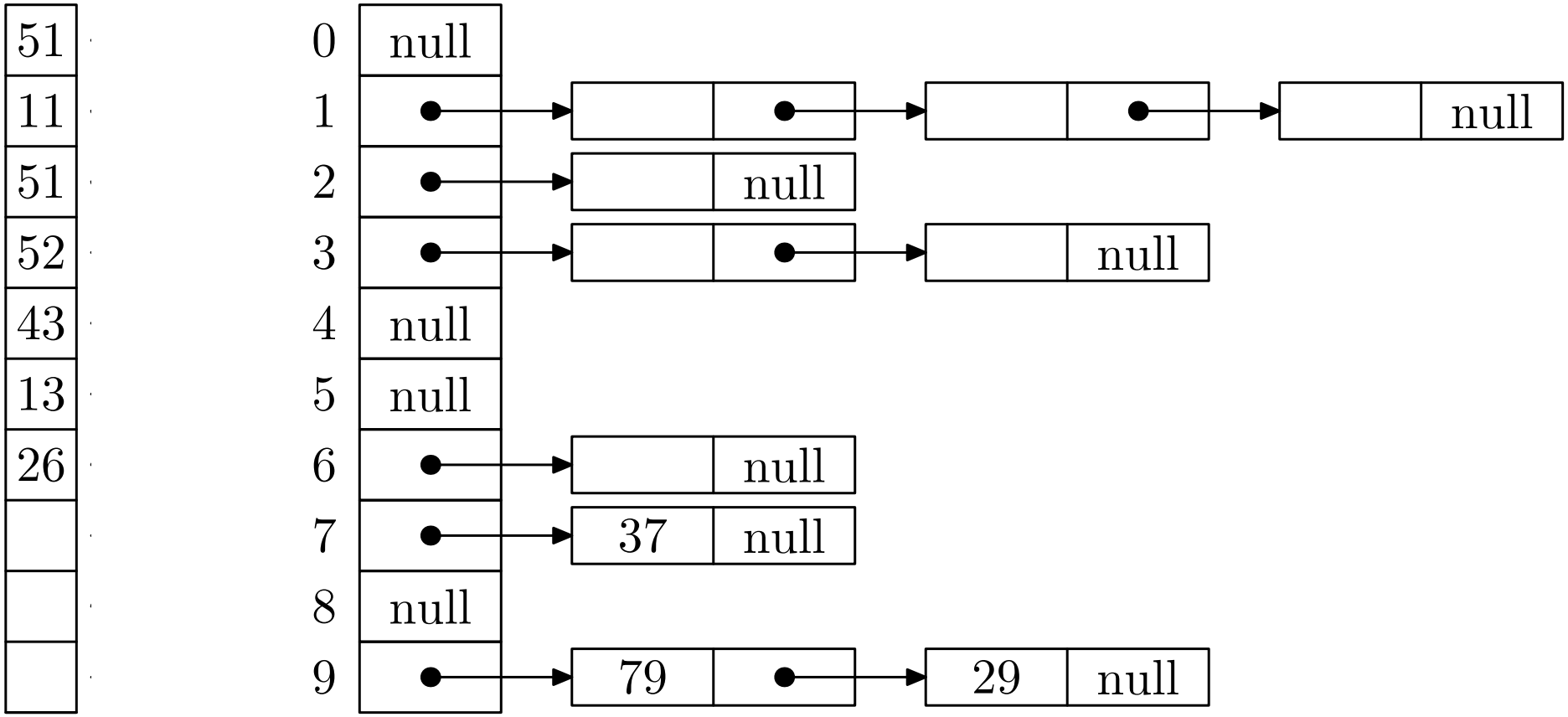

Radix Sort in Action

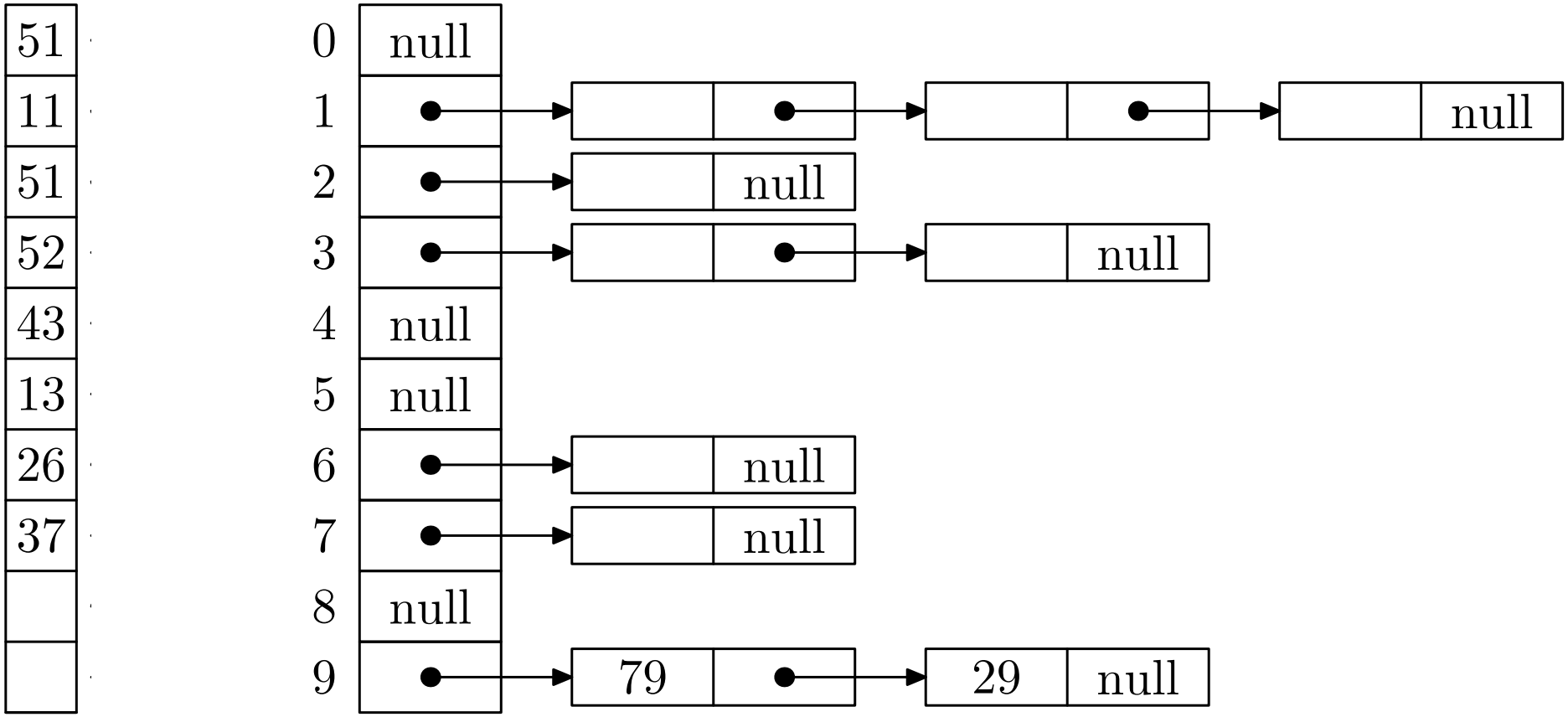

Radix Sort in Action

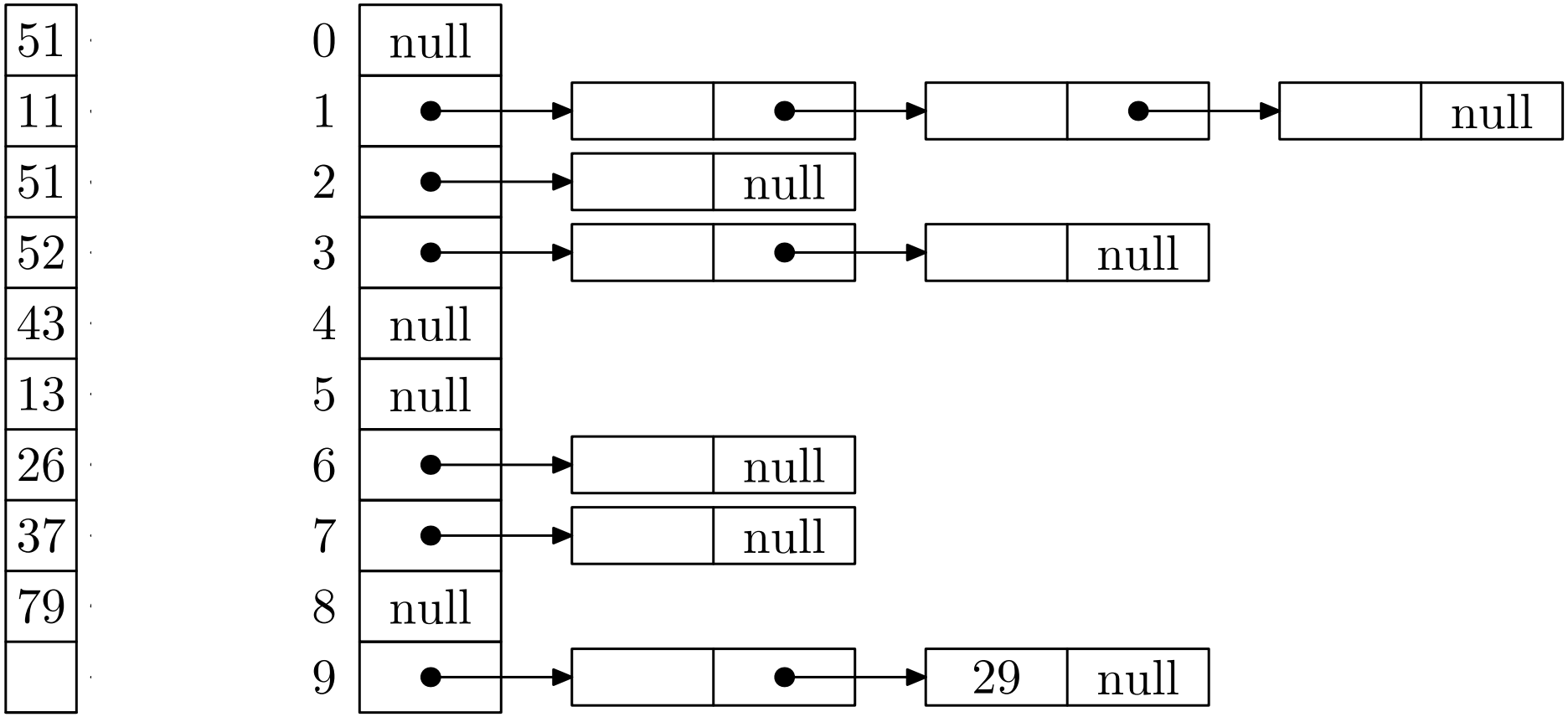

Radix Sort in Action

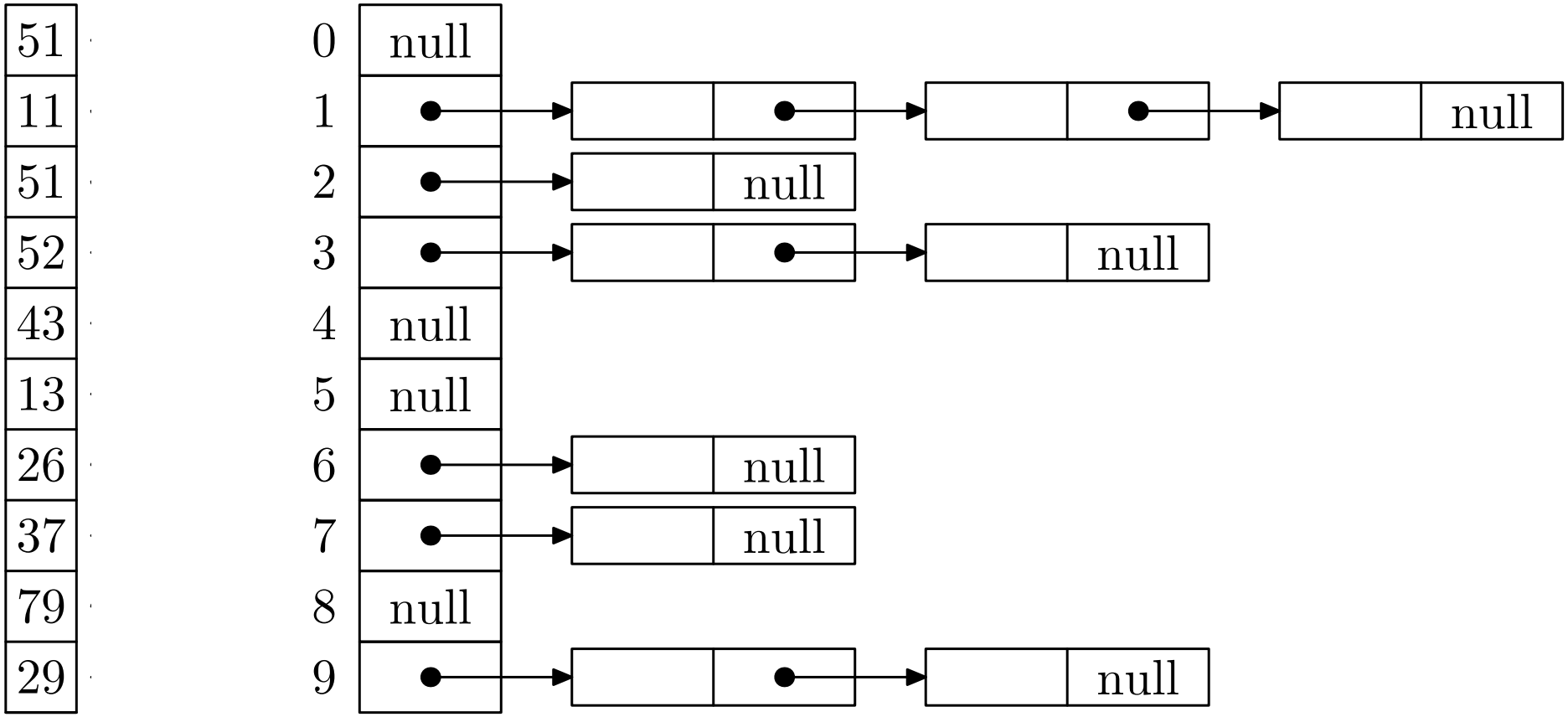

Radix Sort in Action

51	0	null
11	1	null
51	2	null
52	3	null
43	4	null
13	5	null
26	6	null
37	7	null
79	8	null
29	9	null

Radix Sort in Action

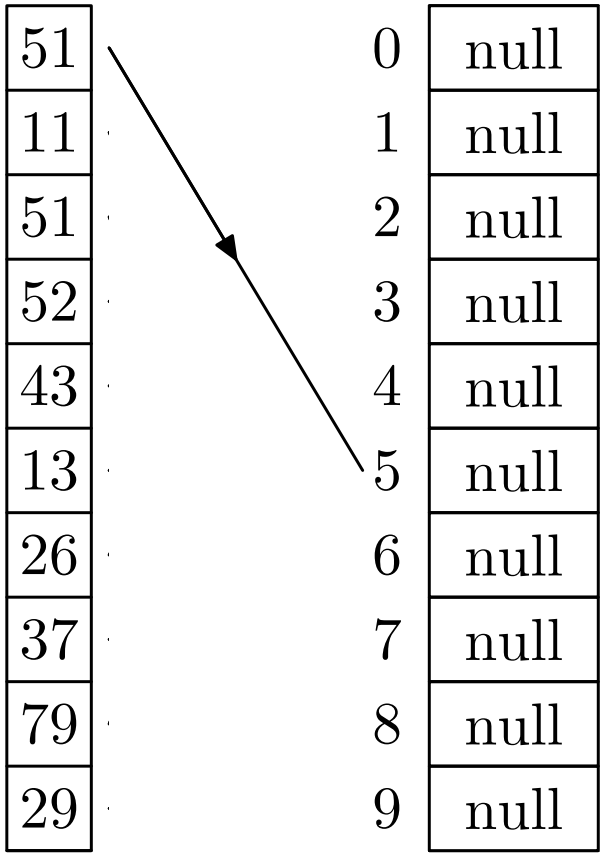

Radix Sort in Action

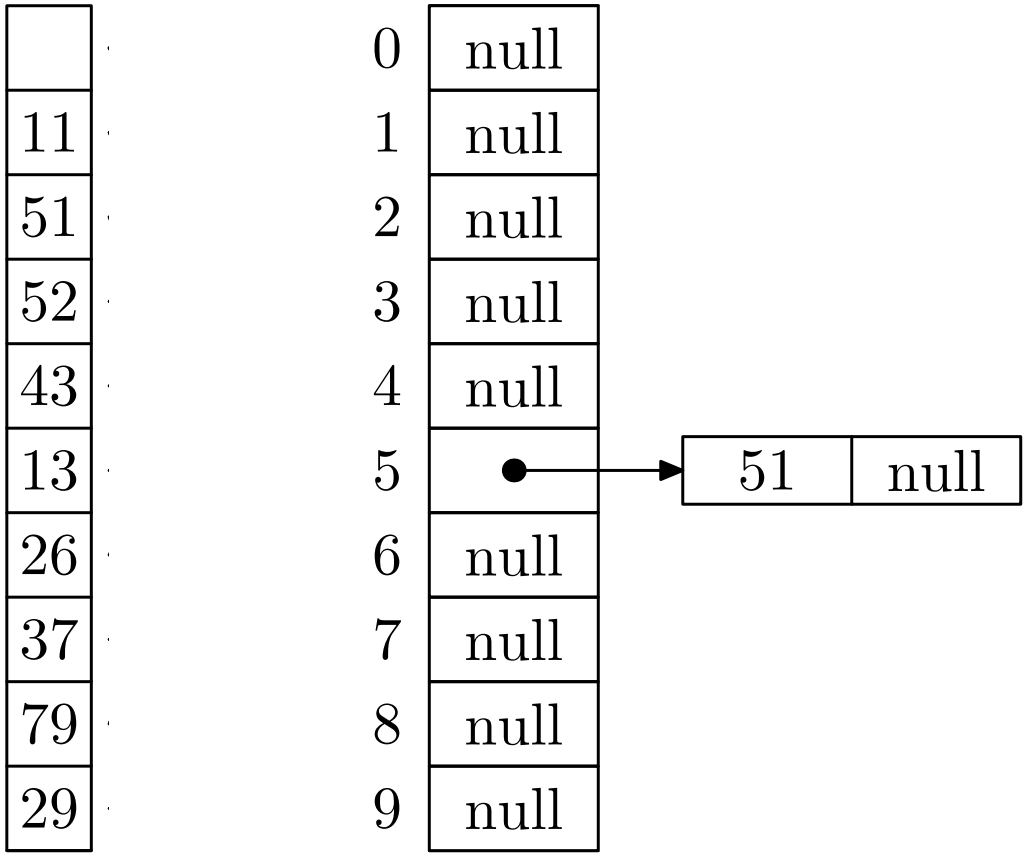

Radix Sort in Action

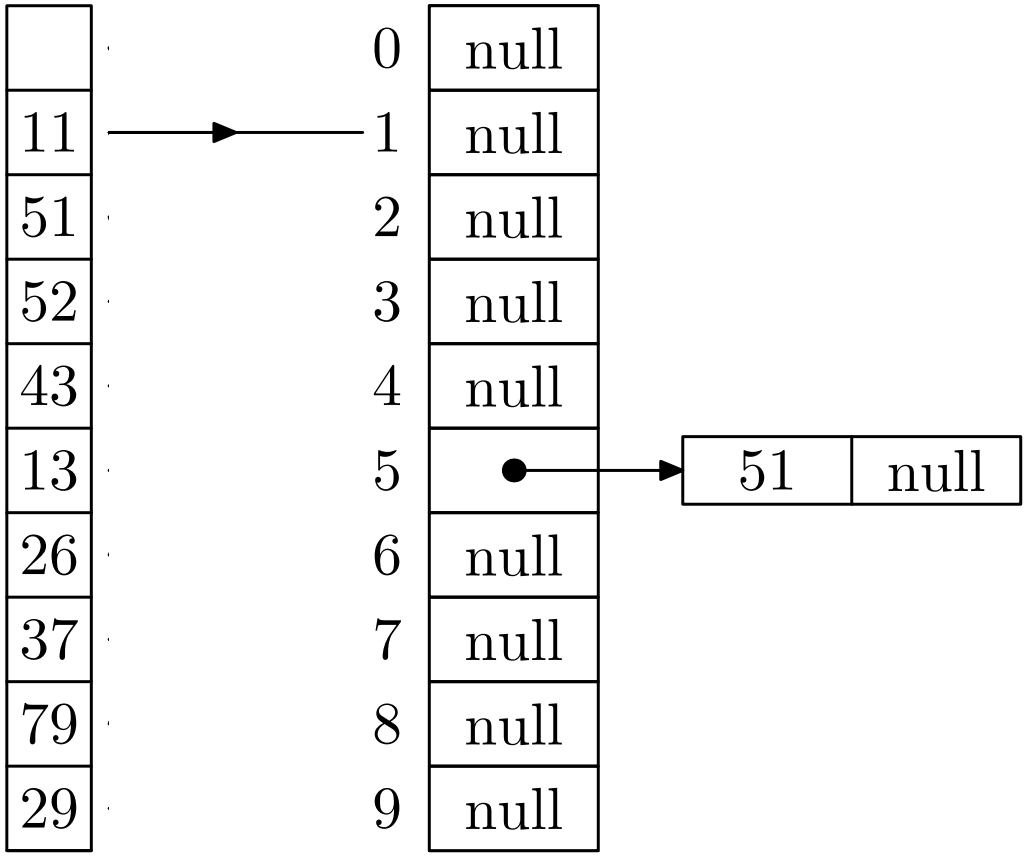

Radix Sort in Action

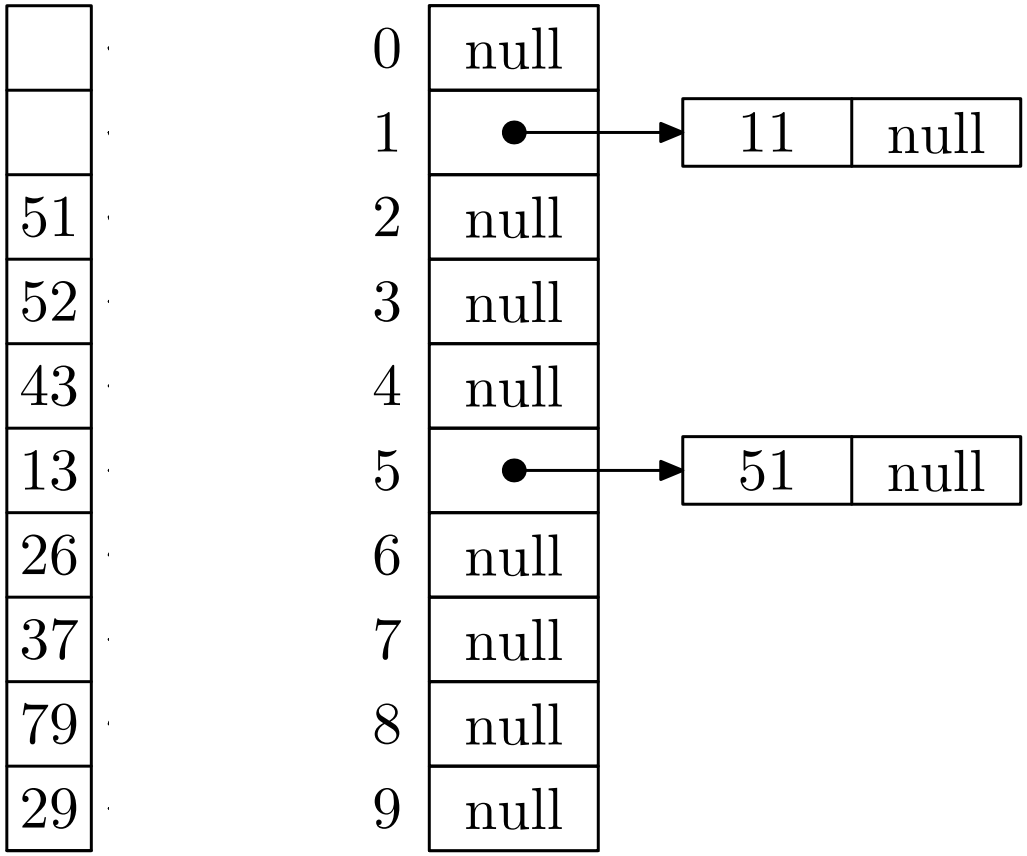

Radix Sort in Action

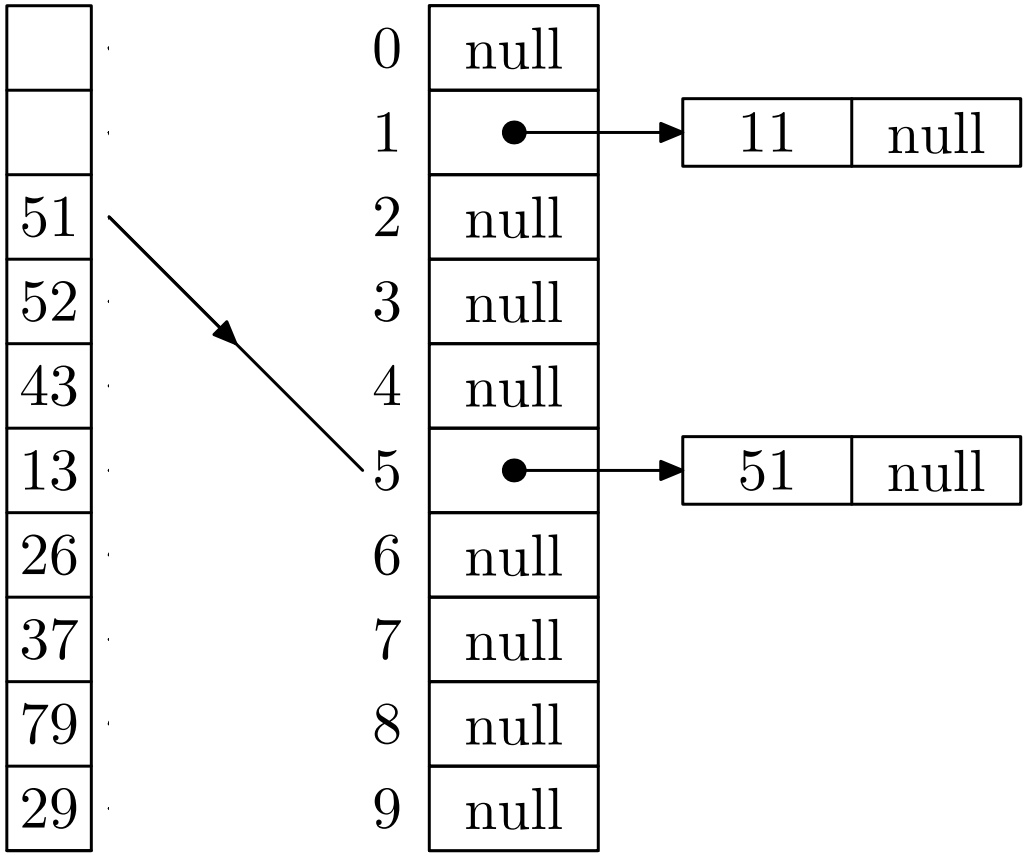

Radix Sort in Action

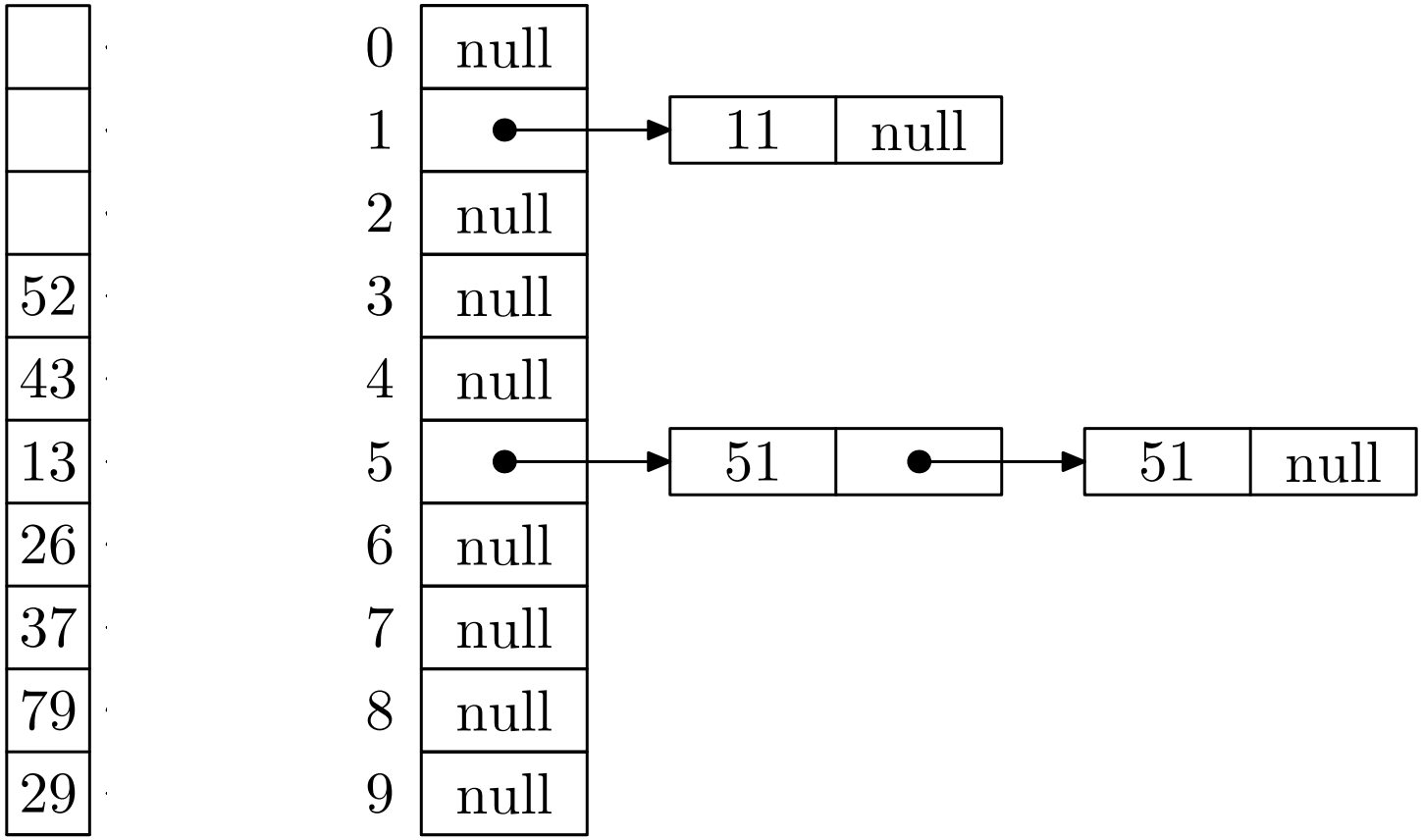

Radix Sort in Action

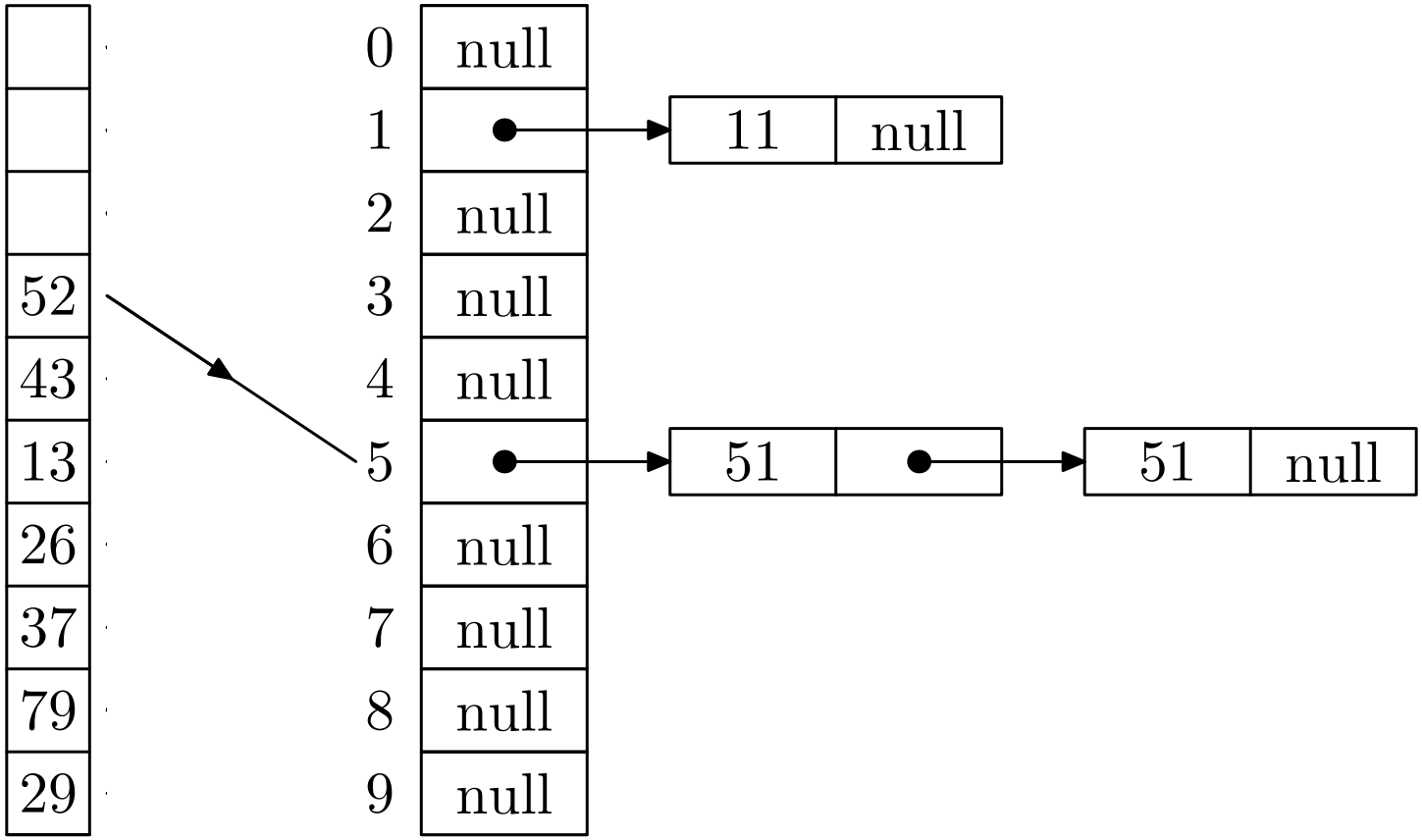

Radix Sort in Action

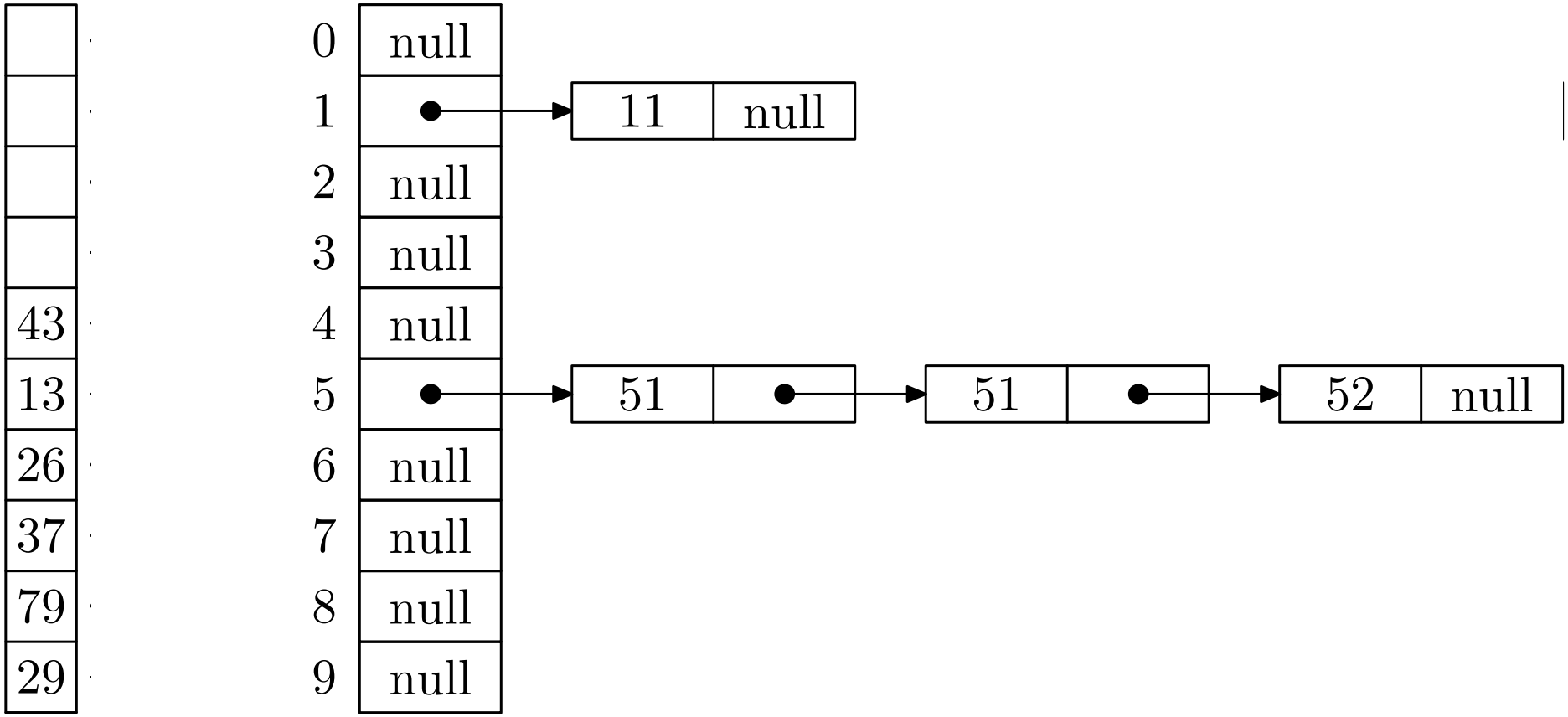

Radix Sort in Action

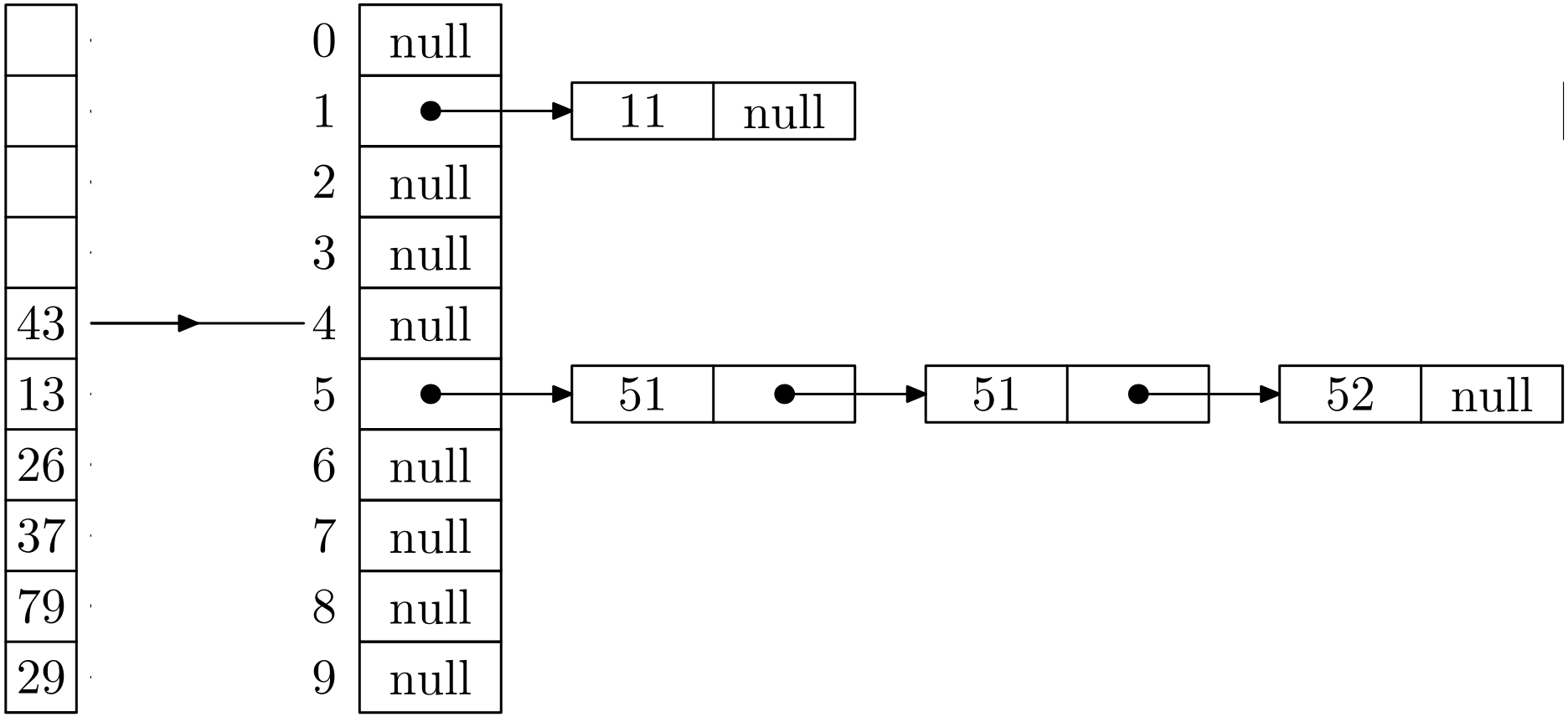

Radix Sort in Action

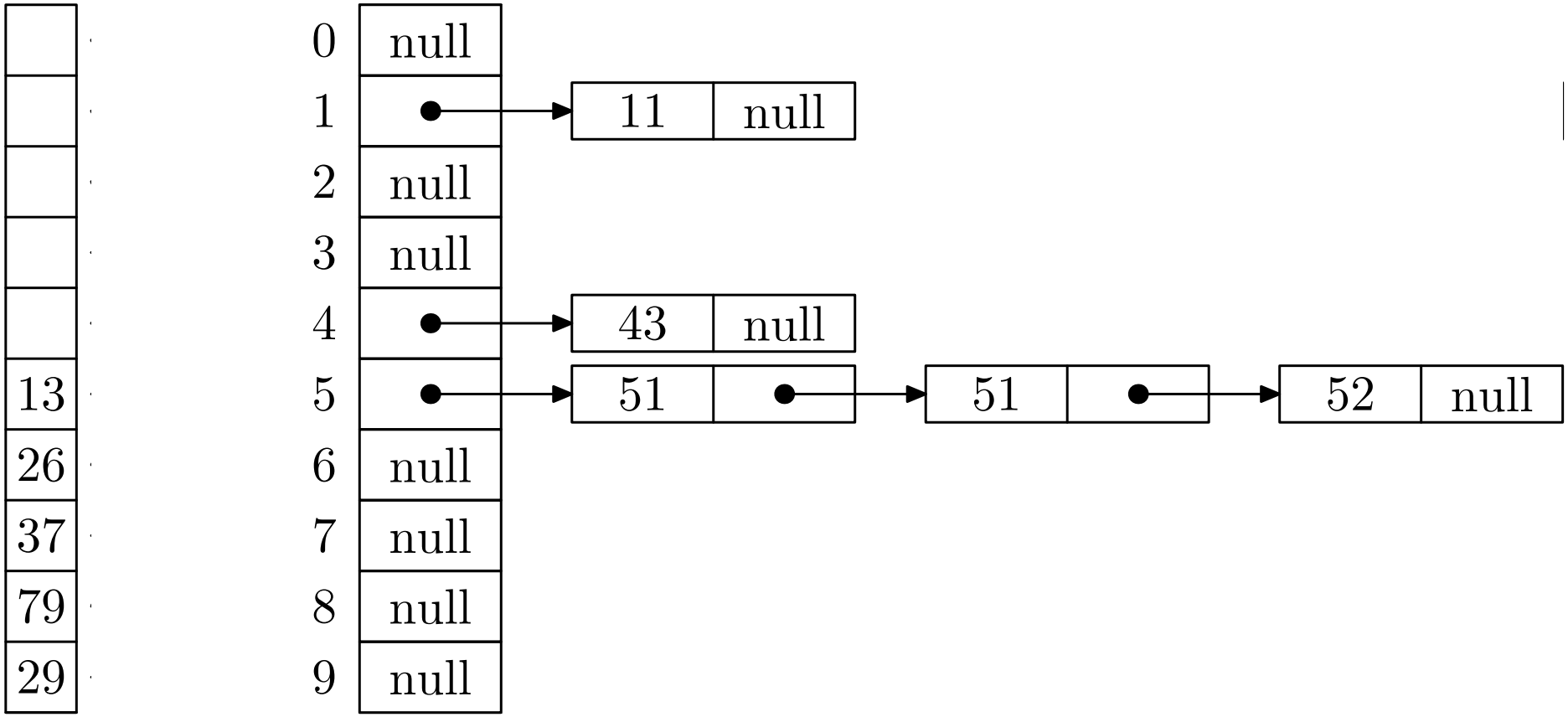

Radix Sort in Action

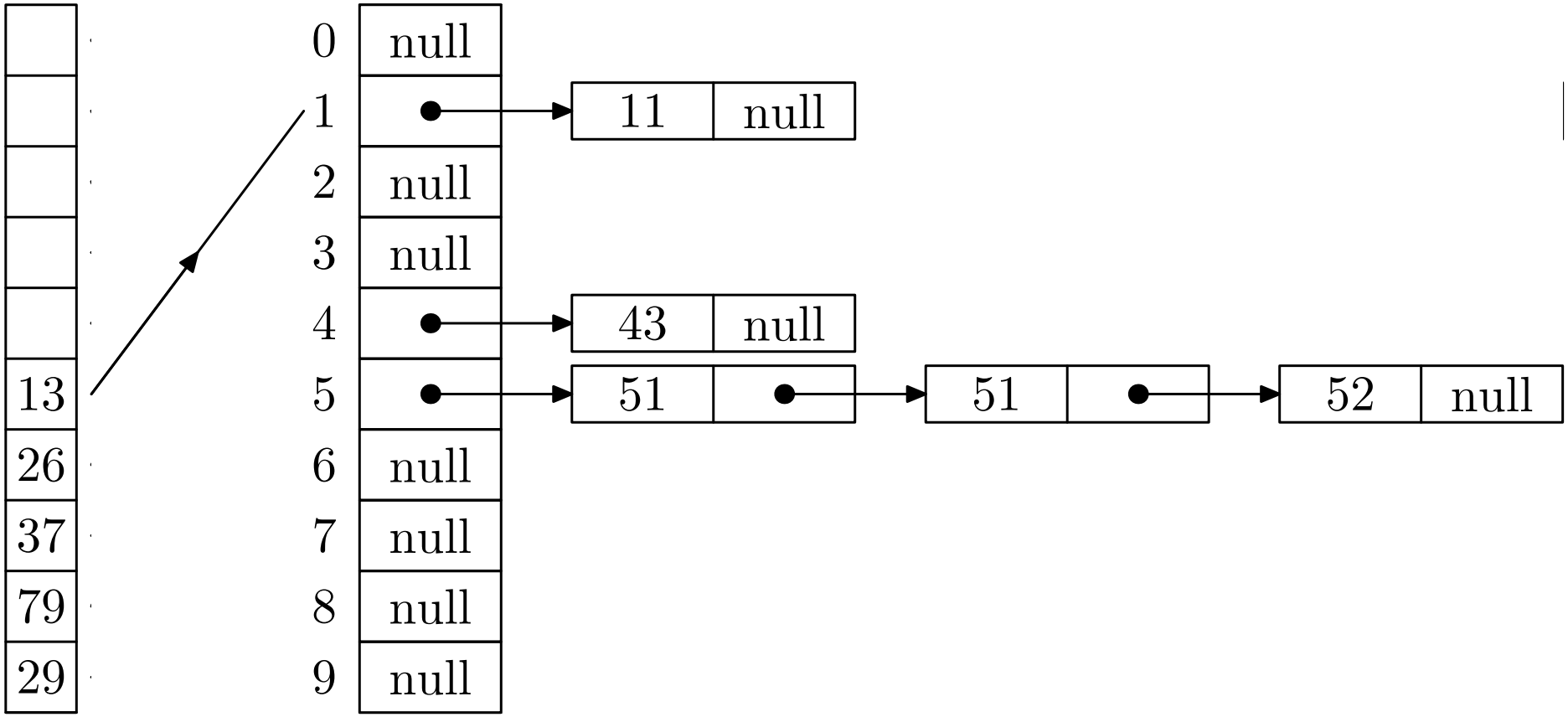

Radix Sort in Action

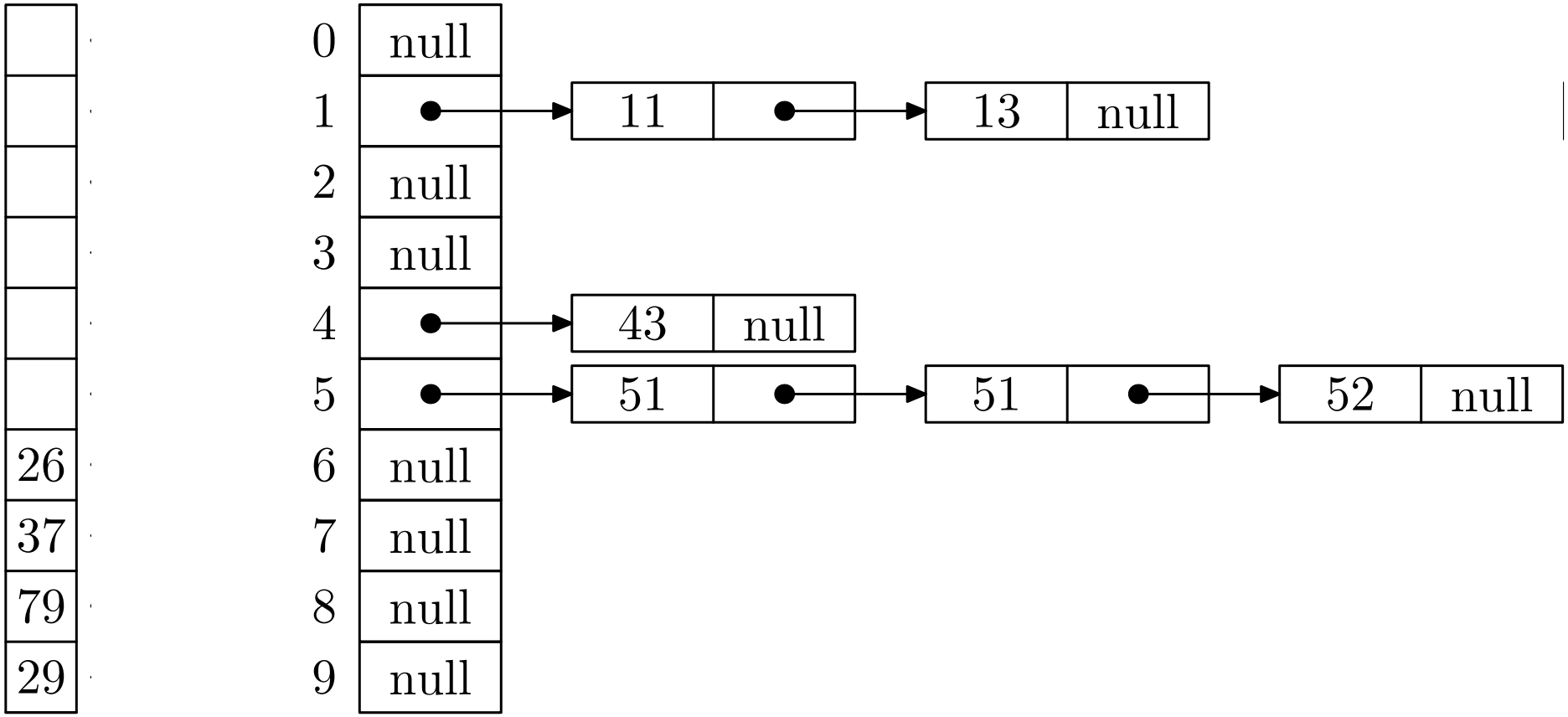

Radix Sort in Action

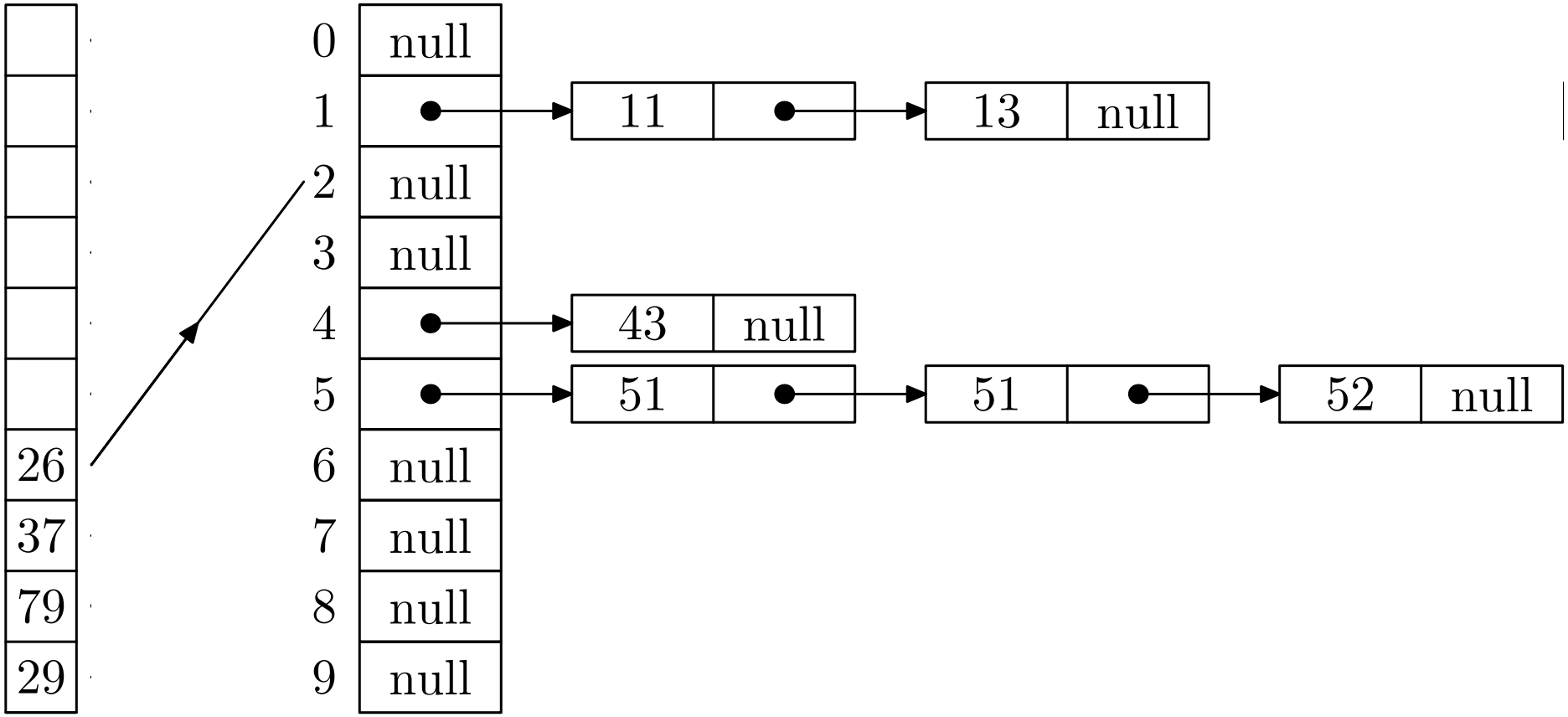

Radix Sort in Action

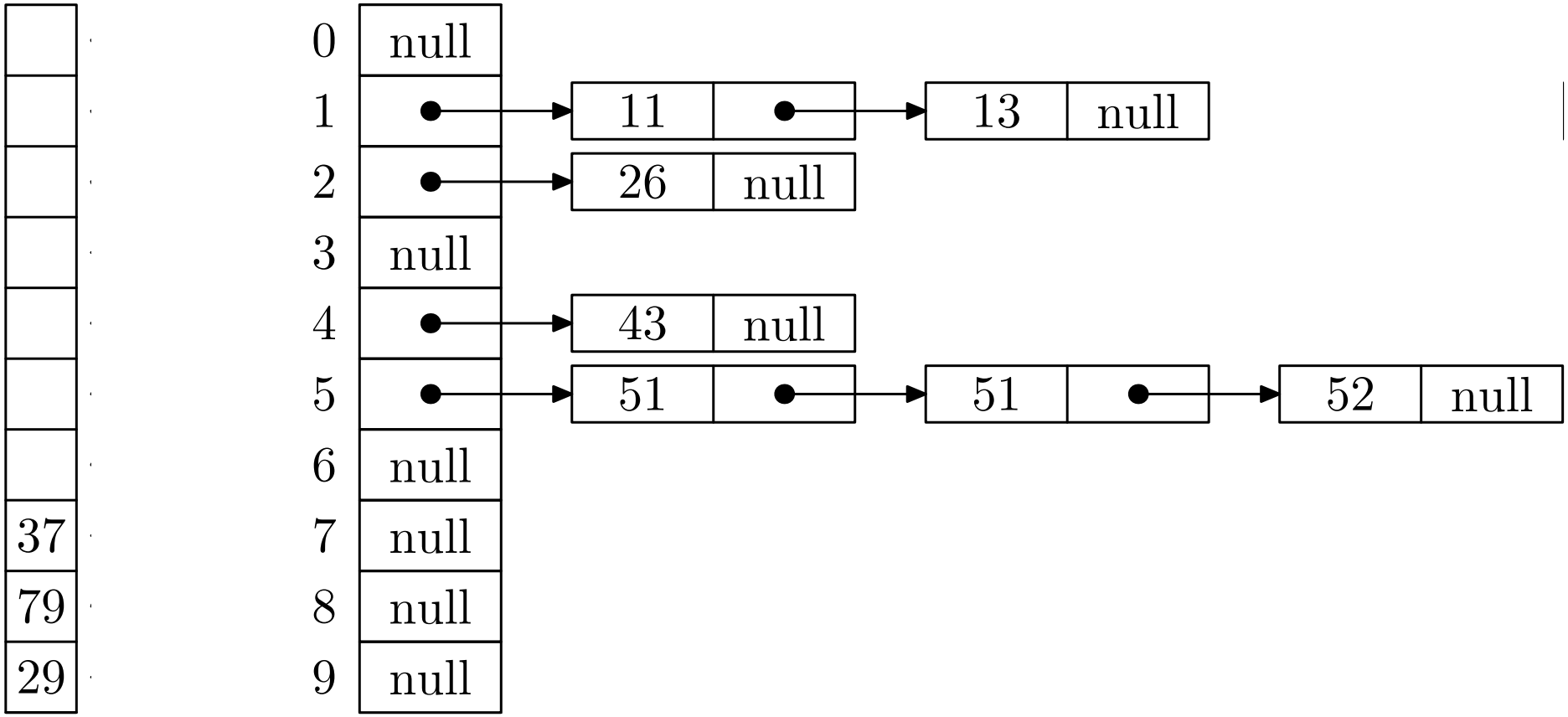

Radix Sort in Action

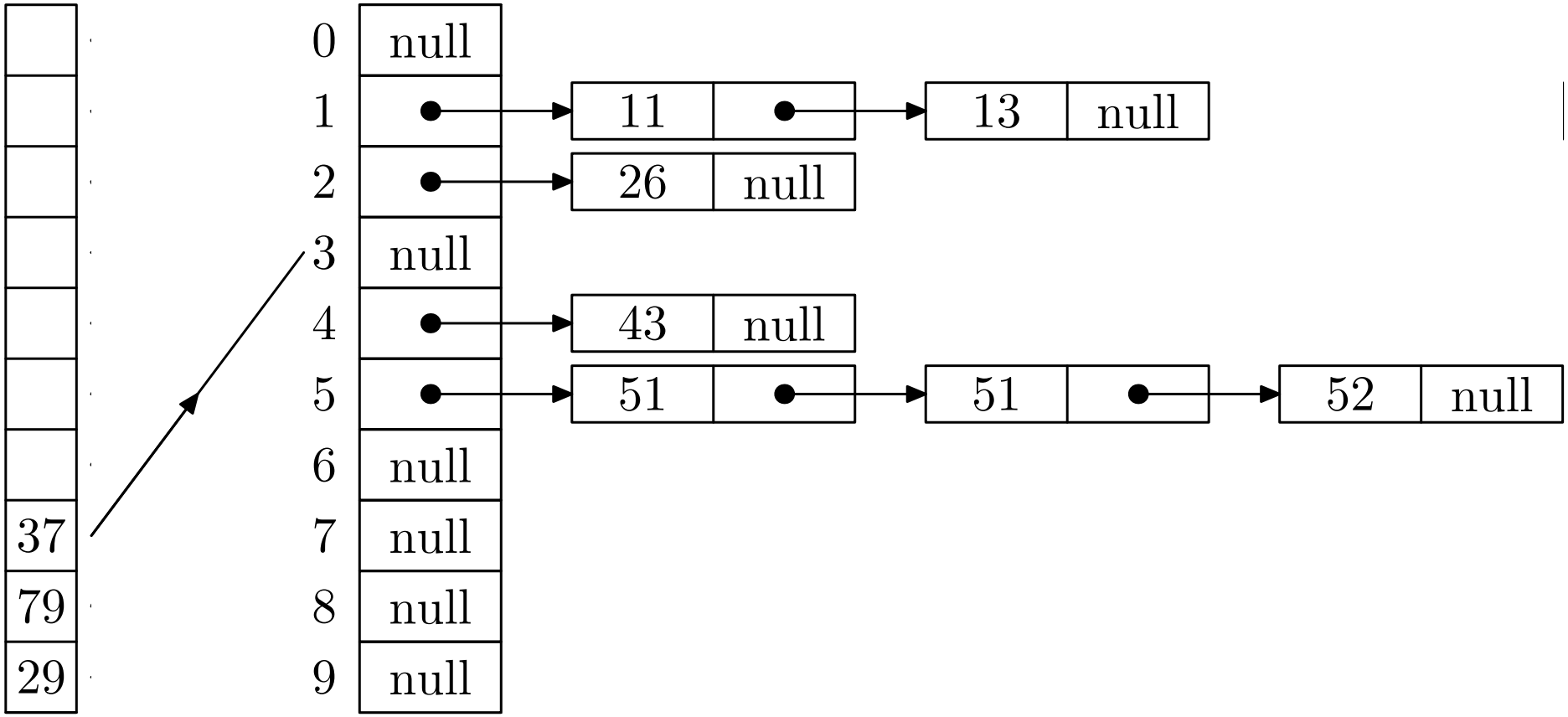

Radix Sort in Action

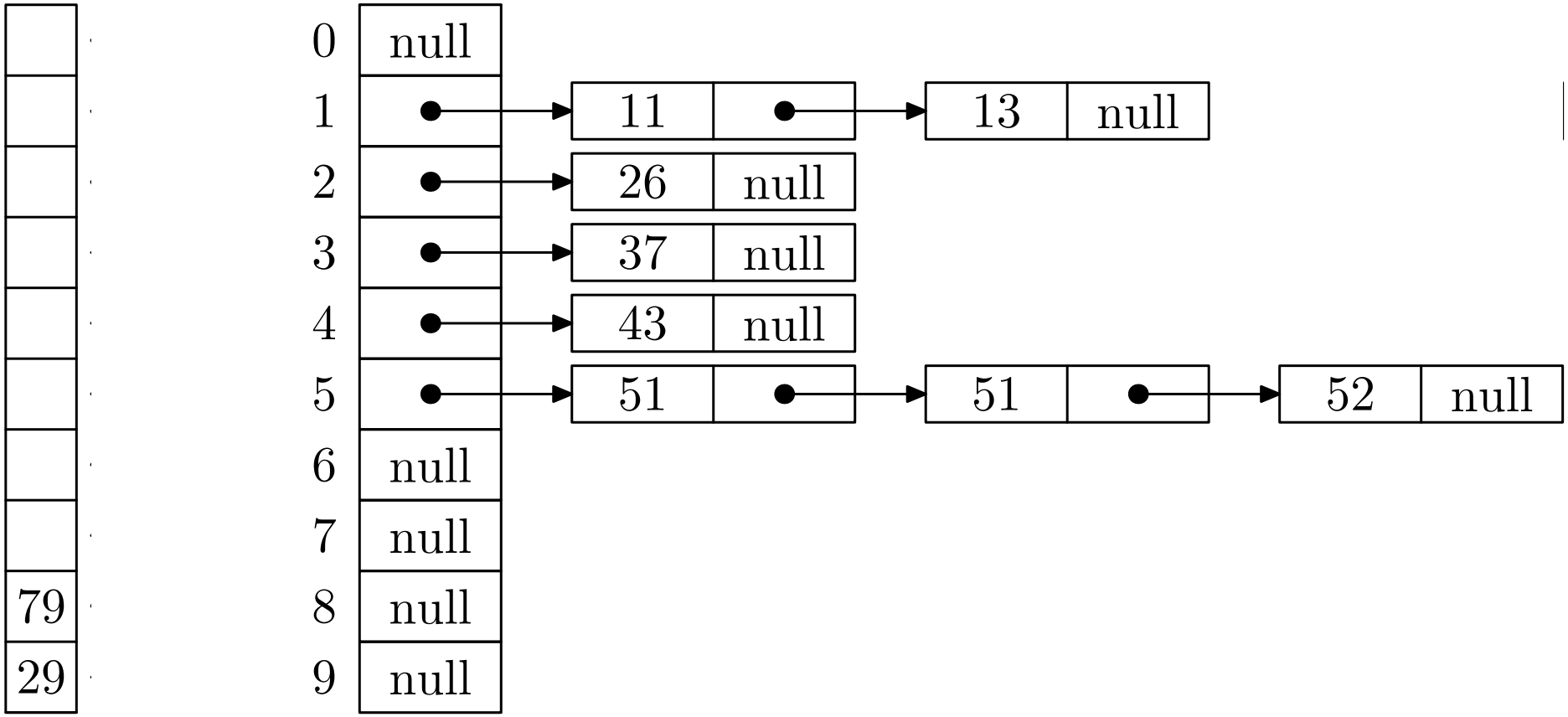

Radix Sort in Action

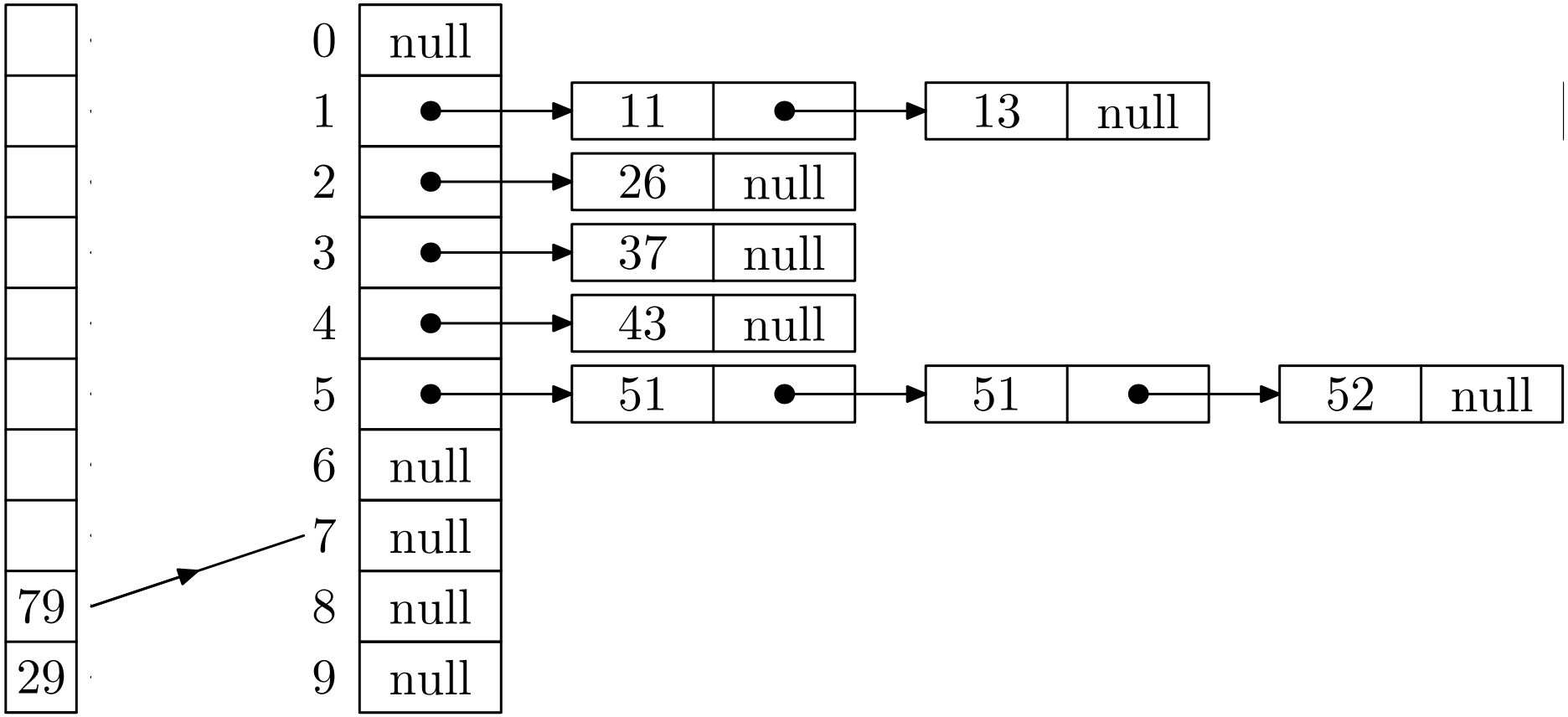

Radix Sort in Action

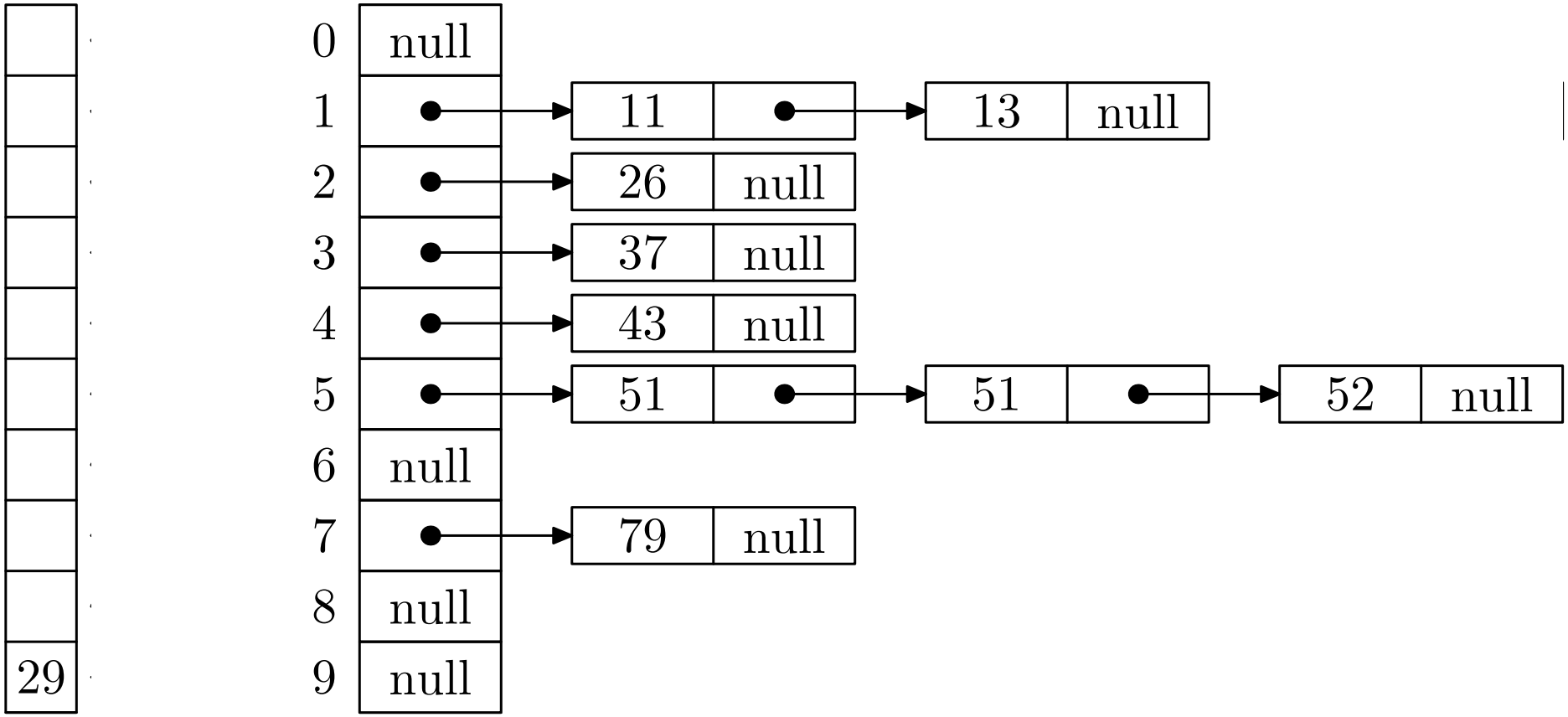

Radix Sort in Action

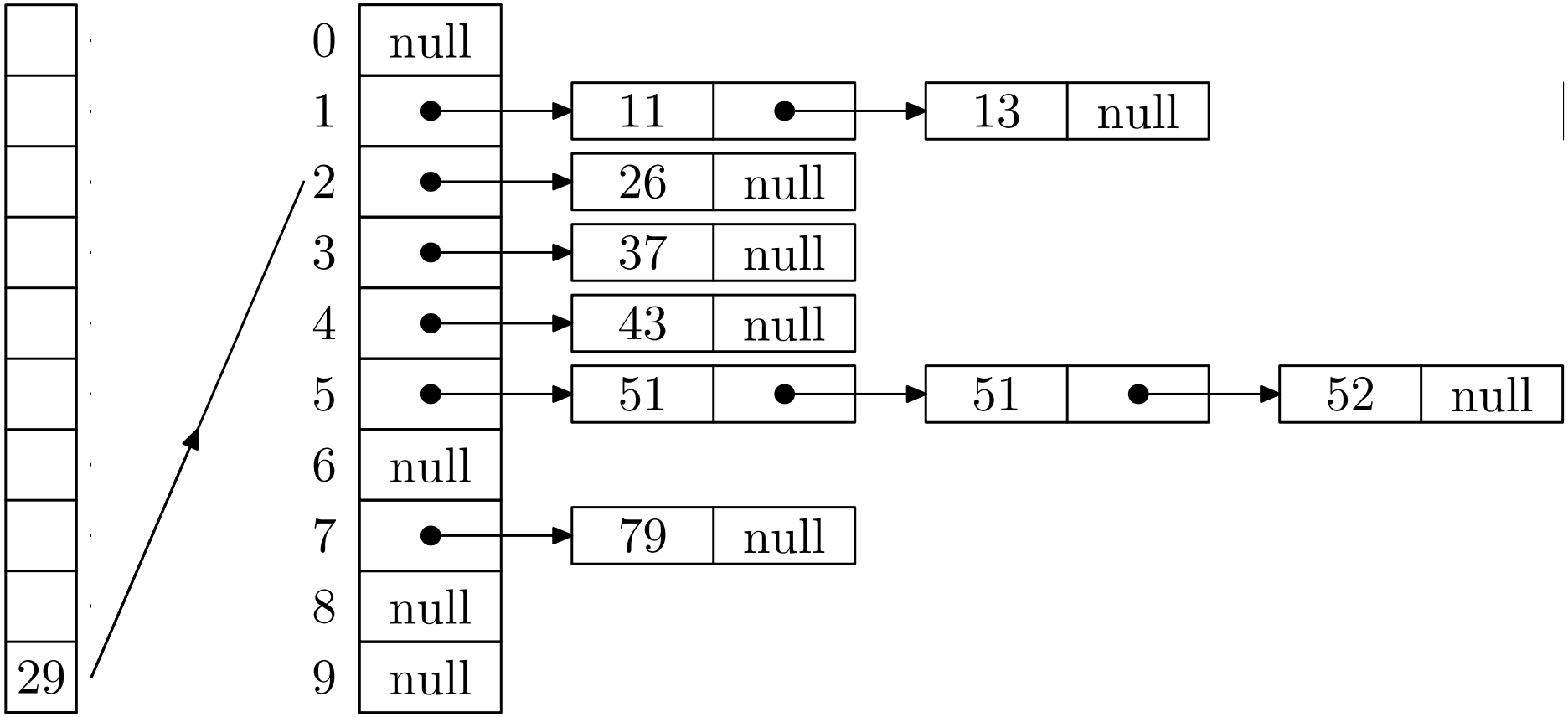

Radix Sort in Action

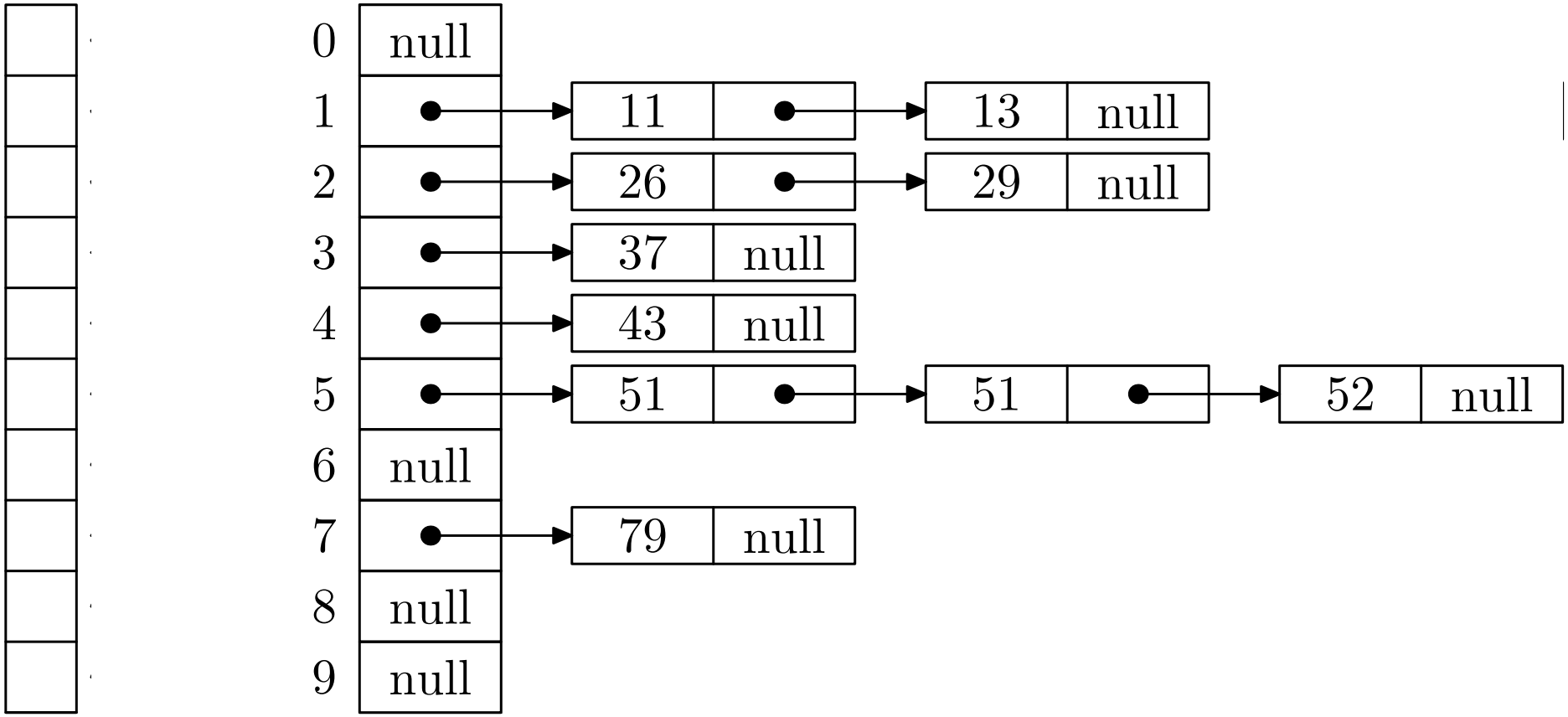

Radix Sort in Action

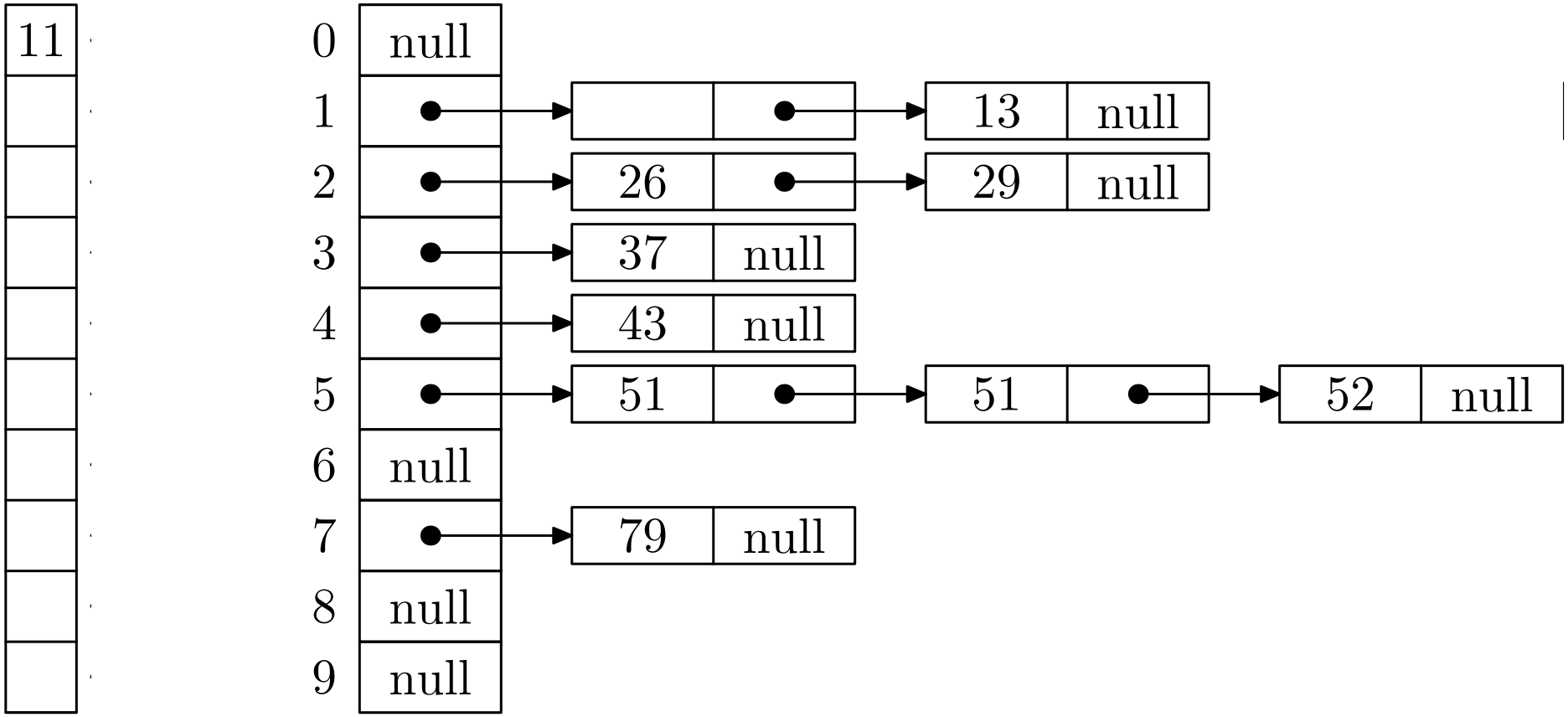

Radix Sort in Action

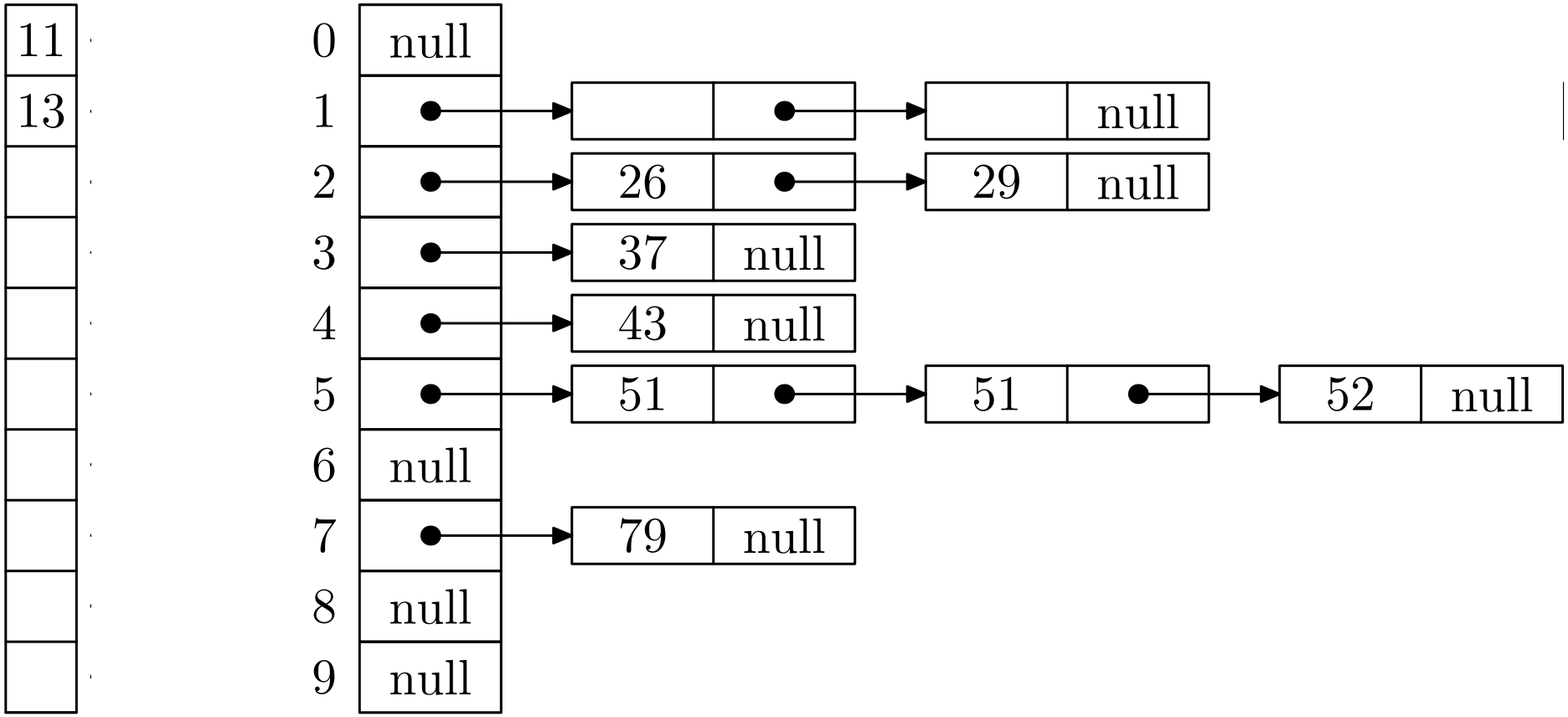

Radix Sort in Action

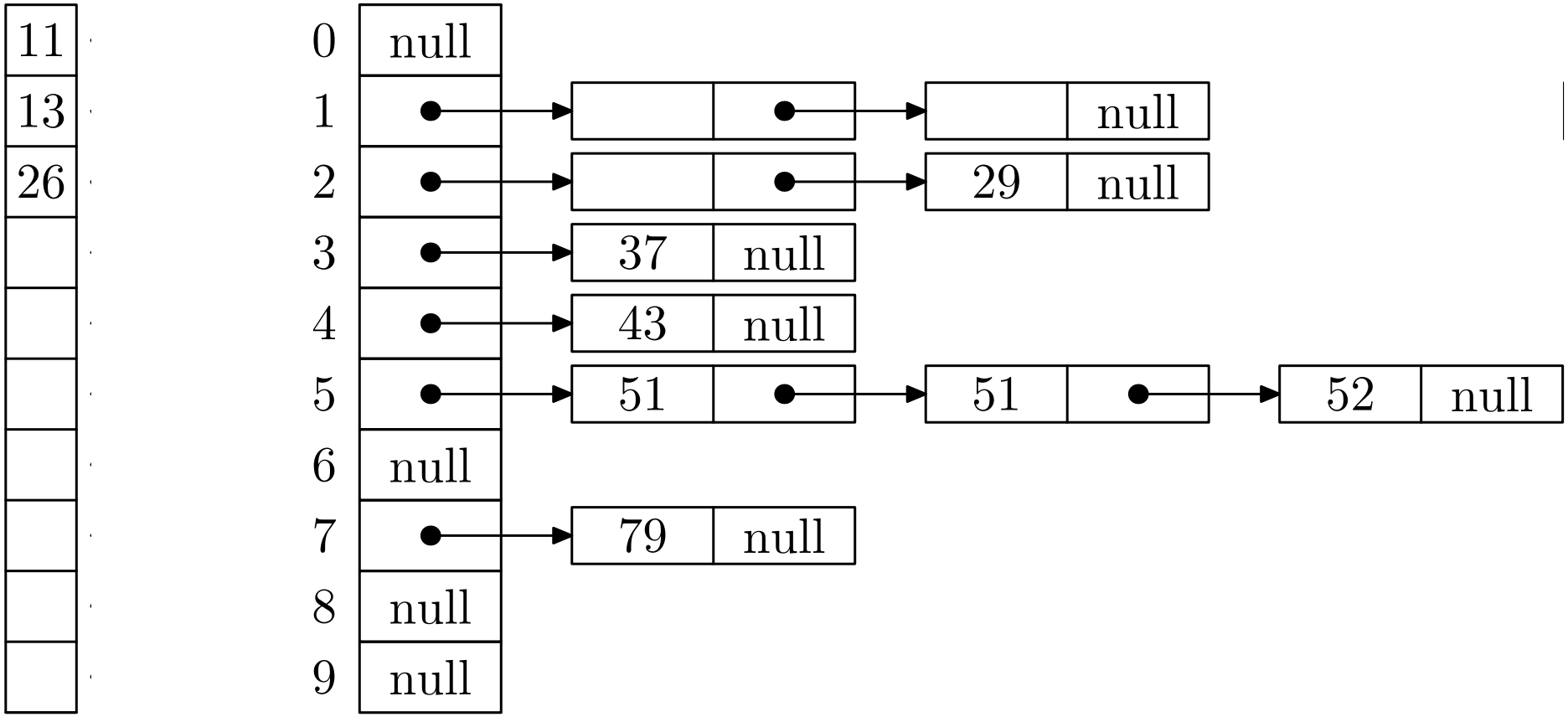

Radix Sort in Action

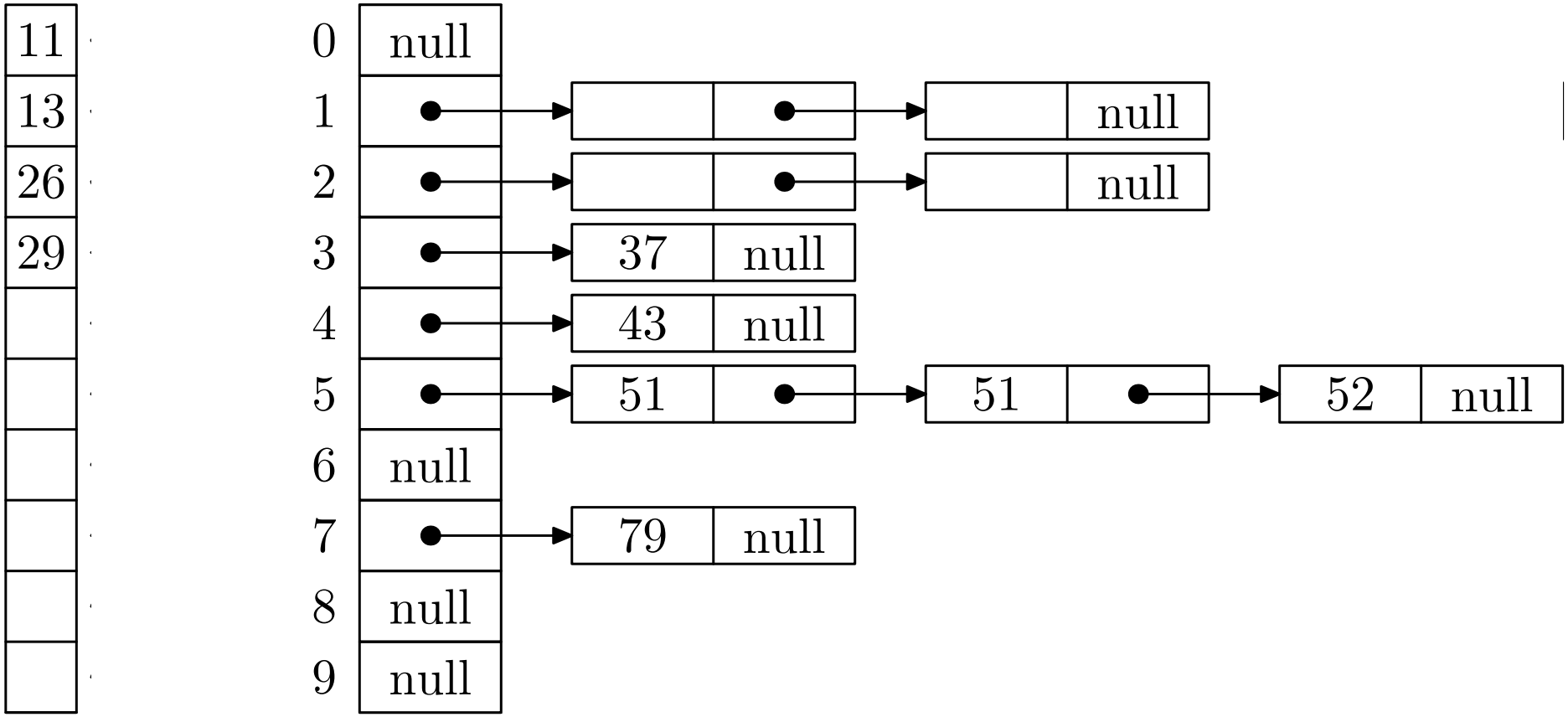

Radix Sort in Action

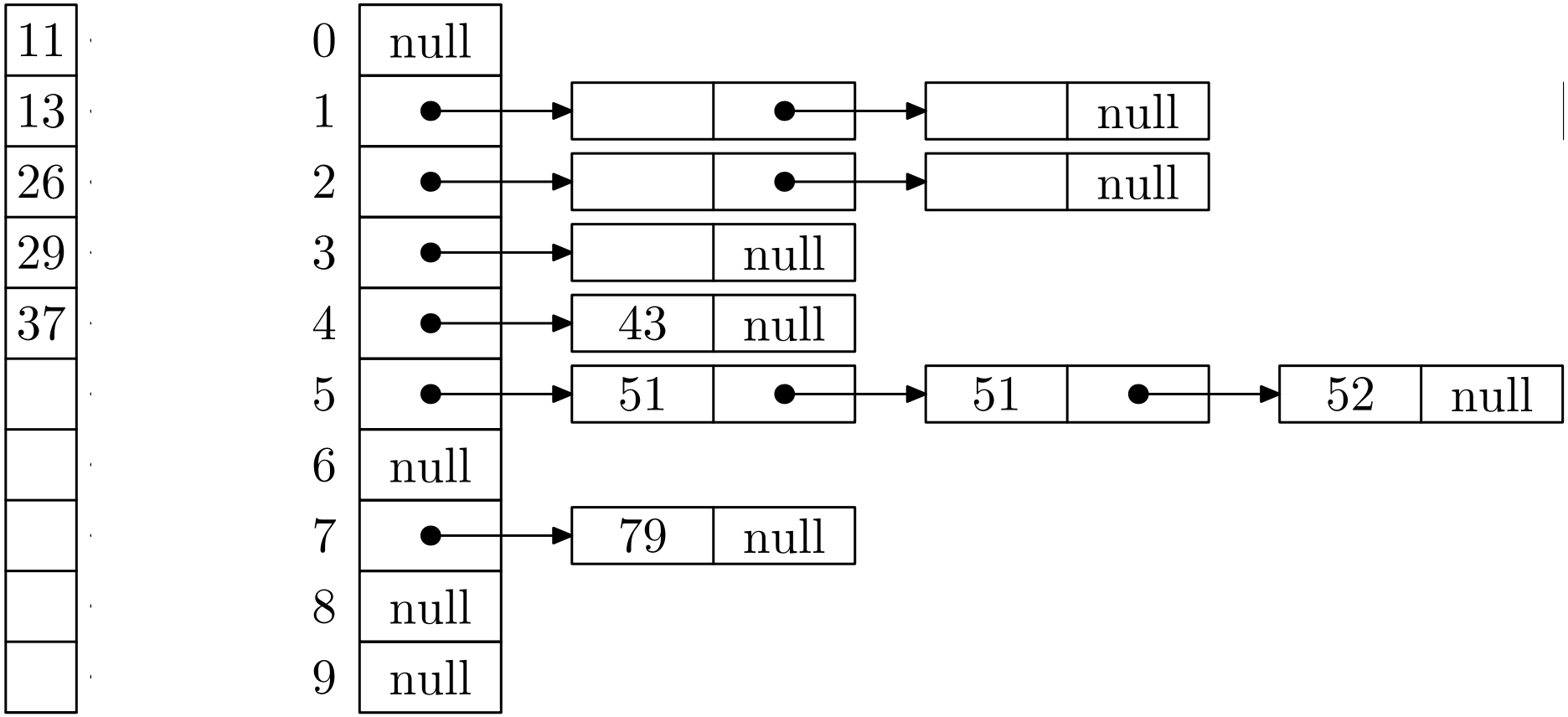

Radix Sort in Action

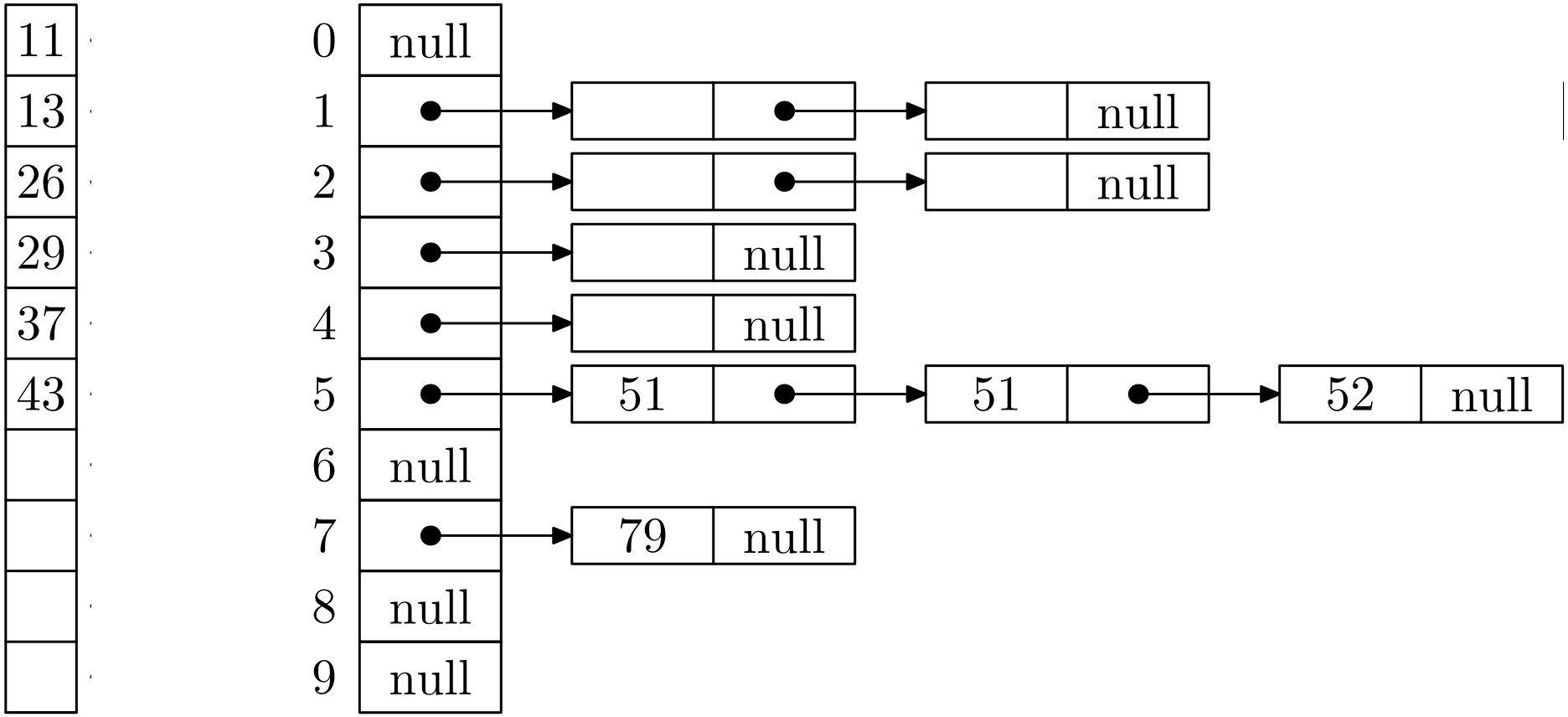

Radix Sort in Action

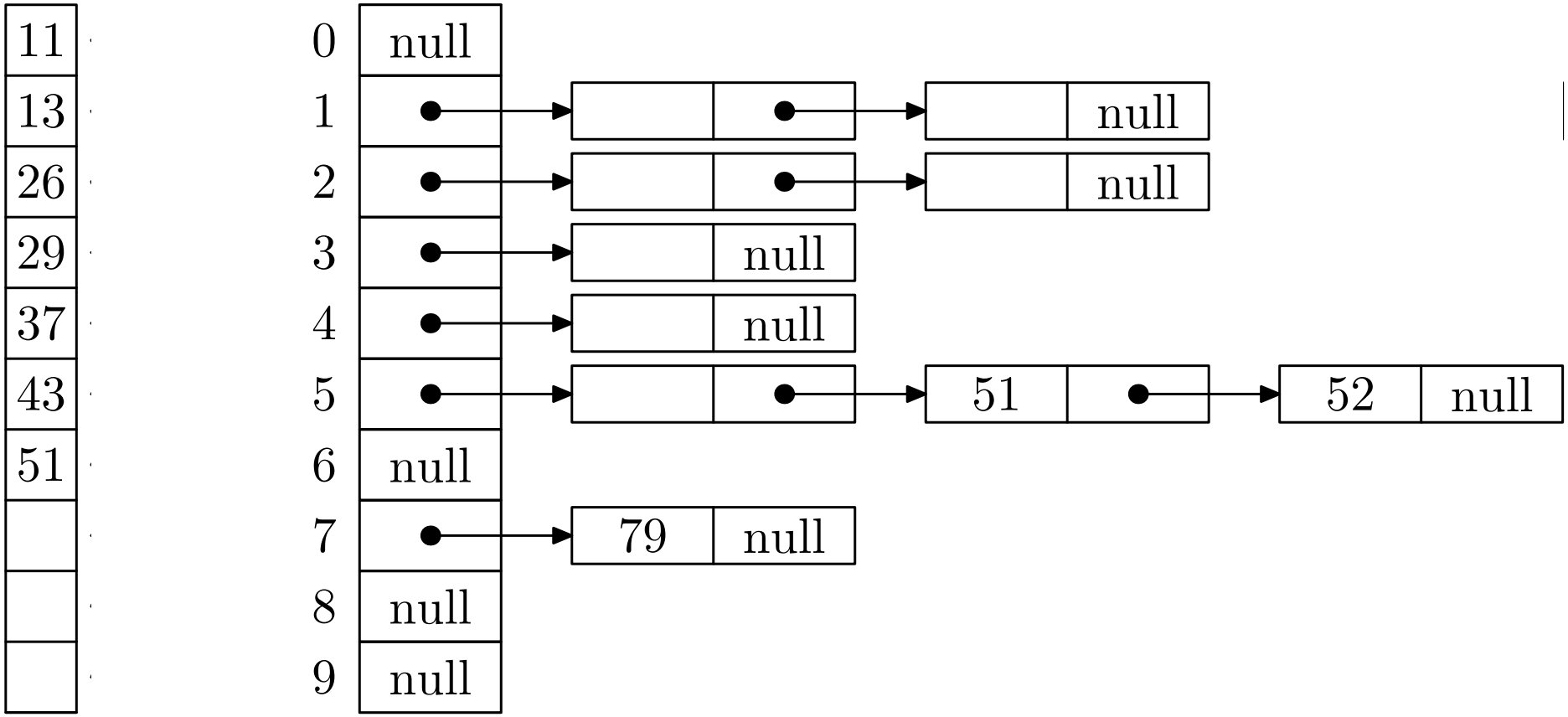

Radix Sort in Action

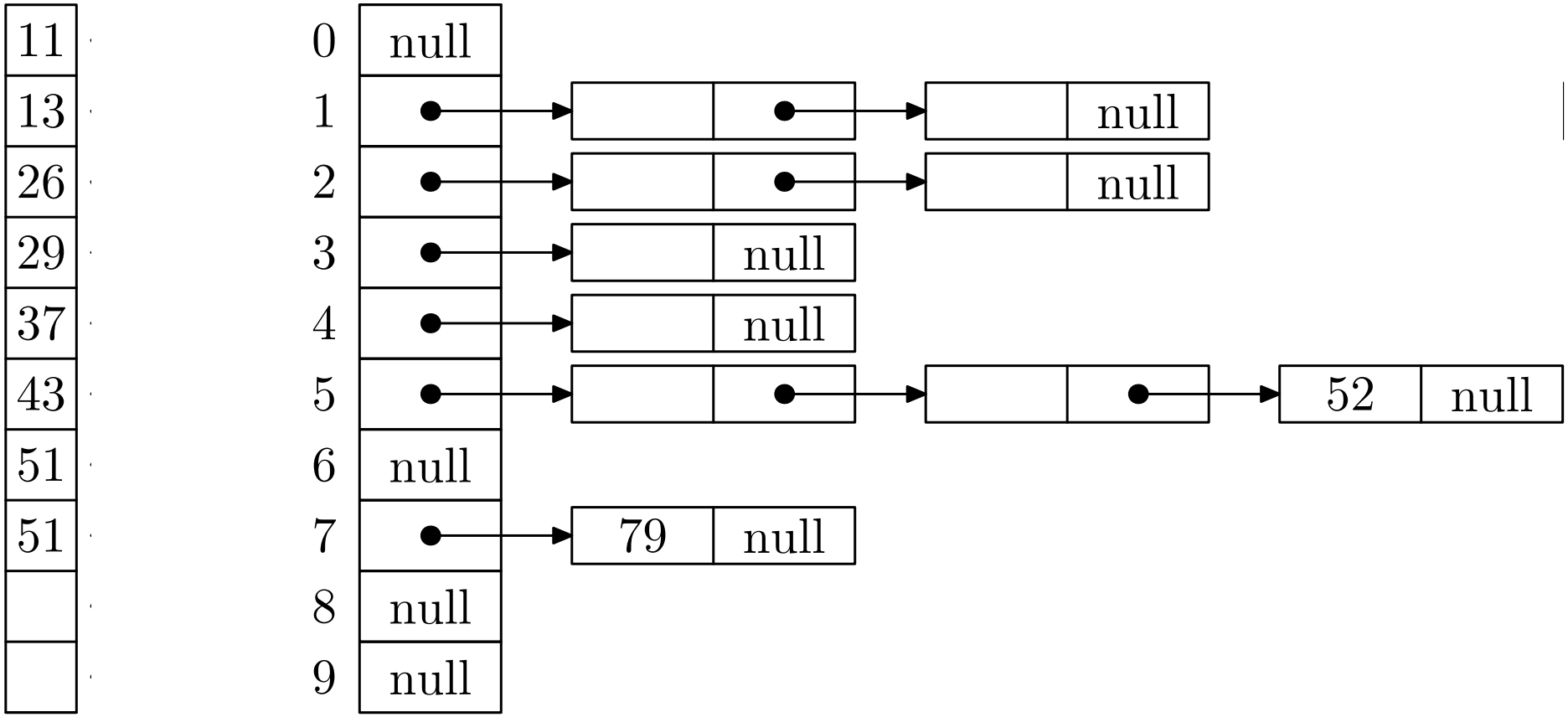

Radix Sort in Action

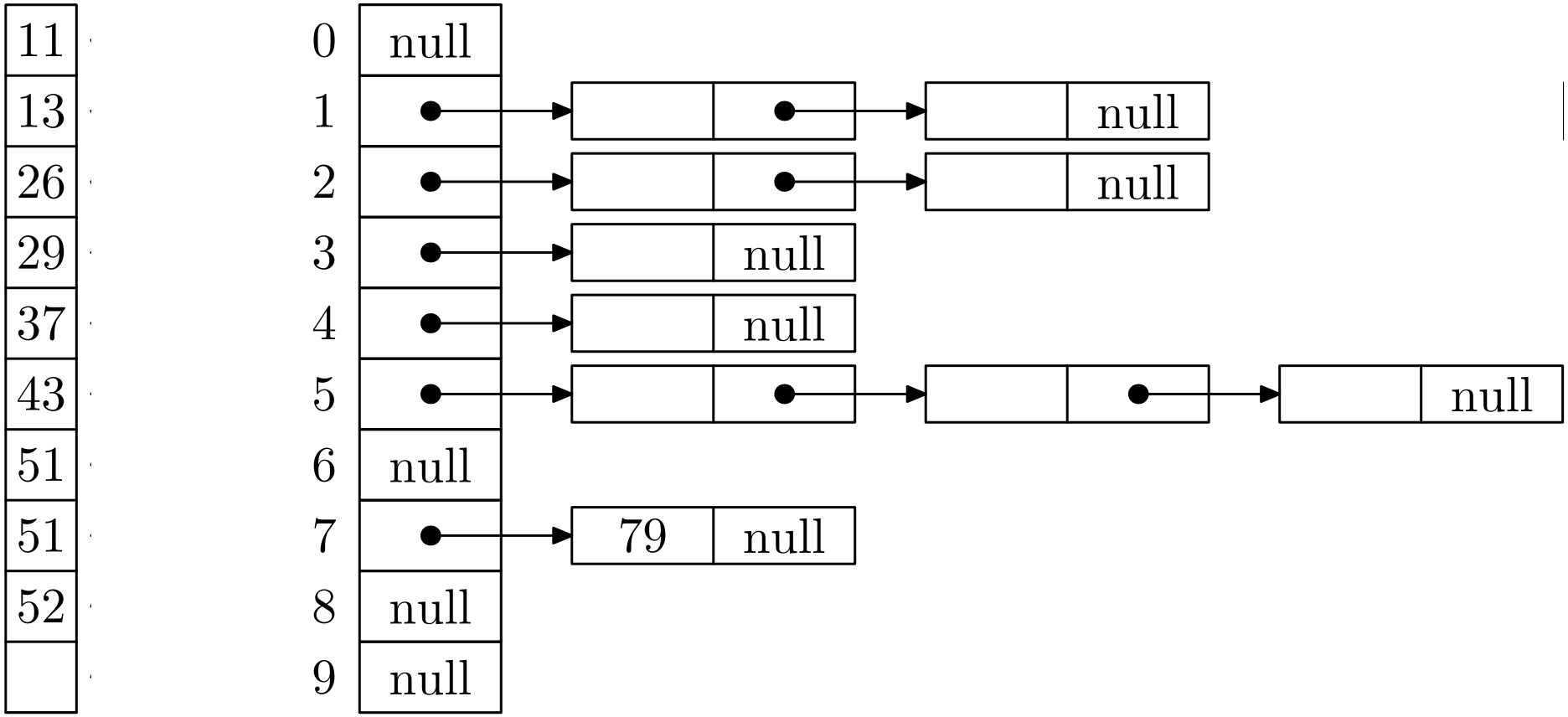

Radix Sort in Action

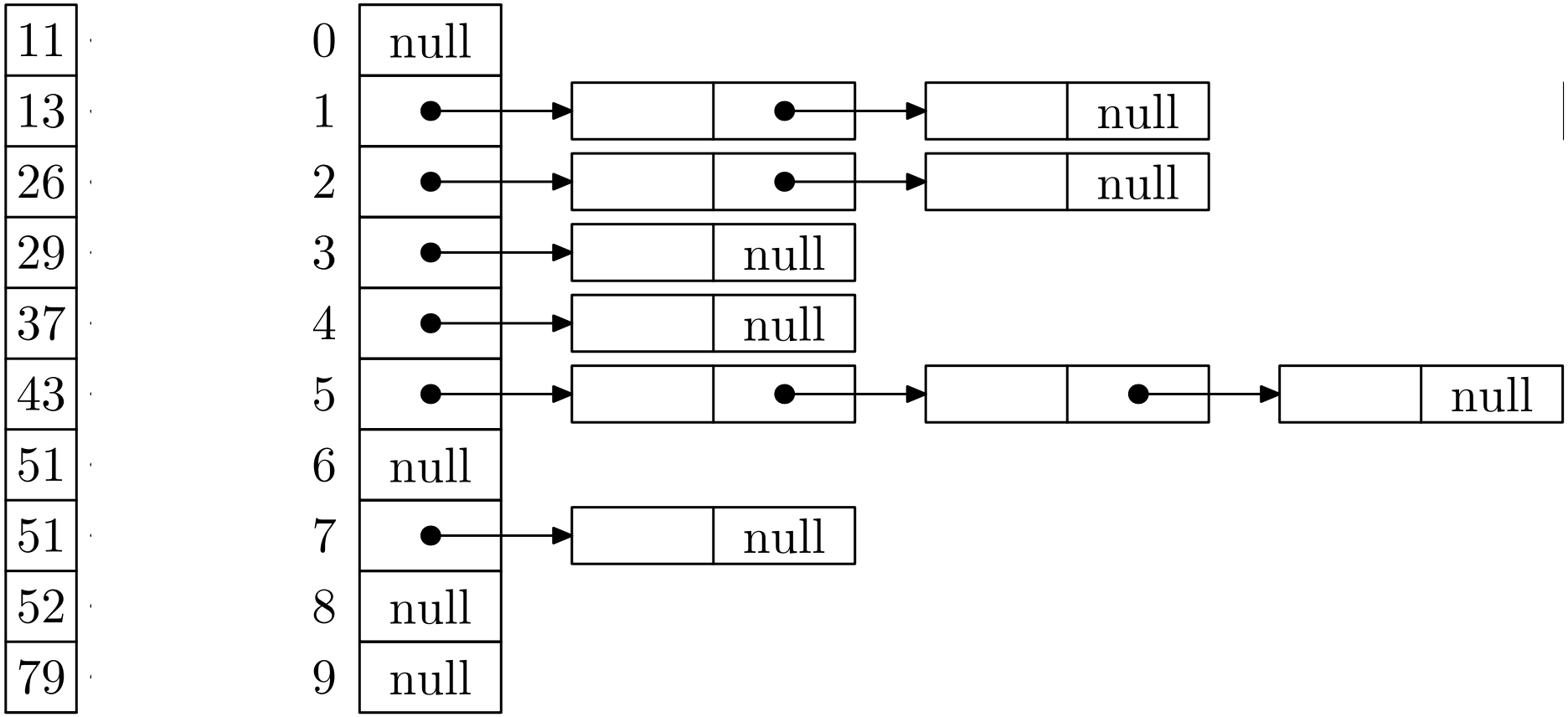

Radix Sort in Action

11	0	null
13	1	null
26	2	null
29	3	null
37	4	null
43	5	null
51	6	null
51	7	null
52	8	null
79	9	null

Time Complexity of Radix Sort

- We need not use base 10 we could use base r (the radix)
- If the maximum number to be sorted is N then the number of iterations of radix sort is $\log_r(N)$
- Each sort involves n operations
- Thus the total number of operations is $O\left(n\lceil\log_r(N)\rceil\right)$
- Since N does not depend on n we can write this as $O\left(n\right)$

Time Complexity of Radix Sort

- We need not use base 10 we could use base r (the radix)
- If the maximum number to be sorted is N then the number of iterations of radix sort is $\log_r(N)$
- Each sort involves n operations
- Thus the total number of operations is $O\left(n\lceil\log_r(N)\rceil\right)$
- Since N does not depend on n we can write this as $O\left(n\right)$

Time Complexity of Radix Sort

- We need not use base 10 we could use base r (the radix)
- If the maximum number to be sorted is N then the number of iterations of radix sort is $\log_r(N)$
- Each sort involves n operations
- Thus the total number of operations is $O\left(n\lceil\log_r(N)\rceil\right)$
- Since N does not depend on n we can write this as $O\left(n\right)$

Time Complexity of Radix Sort

- We need not use base 10 we could use base r (the radix)
- If the maximum number to be sorted is N then the number of iterations of radix sort is $\log_r(N)$
- Each sort involves n operations
- Thus the total number of operations is $O\left(n\lceil\log_r(N)\rceil\right)$
- Since N does not depend on n we can write this as $O\left(n\right)$

Time Complexity of Radix Sort

- We need not use base 10 we could use base r (the radix)
- If the maximum number to be sorted is N then the number of iterations of radix sort is $\log_r(N)$
- Each sort involves n operations
- Thus the total number of operations is $O\left(n\lceil\log_r(N)\rceil\right)$
- Since N does not depend on n we can write this as $O\left(n\right)$

Bucket Sort

- A closely related sort is bucket sort where we divide up the inputs into buckets based on the most significant figure
- We then sort the buckets on less significant figures
- Quicksort is a bucket sort with two buckets, but where we choose a pivot to determine which bucket to use

Bucket Sort

- A closely related sort is bucket sort where we divide up the inputs into buckets based on the most significant figure
- We then sort the buckets on less significant figures
- Quicksort is a bucket sort with two buckets, but where we choose a pivot to determine which bucket to use

Bucket Sort

- A closely related sort is bucket sort where we divide up the inputs into buckets based on the most significant figure
- We then sort the buckets on less significant figures
- Quicksort is a bucket sort with two buckets, but where we choose a pivot to determine which bucket to use

Minimum Time for Sort

- Can we do better?
- In any sort we need to examine all possible elements in the array
- If there is an element that isn't examined then we don't know where to put it
- Thus the lower bound on any sort algorithm is $\Omega(n)$

Minimum Time for Sort

- Can we do better?
- In any sort we need to examine all possible elements in the array
- If there is an element that isn't examined then we don't know where to put it
- Thus the lower bound on any sort algorithm is $\Omega(n)$

Minimum Time for Sort

- Can we do better?
- In any sort we need to examine all possible elements in the array
- If there is an element that isn't examined then we don't know where to put it
- Thus the lower bound on any sort algorithm is $\Omega(n)$

Minimum Time for Sort

- Can we do better?
- In any sort we need to examine all possible elements in the array
- If there is an element that isn't examined then we don't know where to put it
- Thus the lower bound on any sort algorithm is $\Omega(n)$

Practical Sort

- In practice, radix sort or bucket sort are rarely used
- The overhead of maintaining the buckets make them less efficient than they might appear
- Radix sort is harder to generalise to other data types than comparison based sorts
- In practice quick sort and merge sort are usually preferred
- Having said that there are some very neat implementations of radix sort

Practical Sort

- In practice, radix sort or bucket sort are rarely used
- The overhead of maintaining the buckets make them less efficient than they might appear
- Radix sort is harder to generalise to other data types than comparison based sorts
- In practice quick sort and merge sort are usually preferred
- Having said that there are some very neat implementations of radix sort

Practical Sort

- In practice, radix sort or bucket sort are rarely used
- The overhead of maintaining the buckets make them less efficient than they might appear
- Radix sort is harder to generalise to other data types than comparison based sorts
- In practice quick sort and merge sort are usually preferred
- Having said that there are some very neat implementations of radix sort

Practical Sort

- In practice, radix sort or bucket sort are rarely used
- The overhead of maintaining the buckets make them less efficient than they might appear
- Radix sort is harder to generalise to other data types than comparison based sorts
- In practice quick sort and merge sort are usually preferred
- Having said that there are some very neat implementations of radix sort

Practical Sort

- In practice, radix sort or bucket sort are rarely used
- The overhead of maintaining the buckets make them less efficient than they might appear
- Radix sort is harder to generalise to other data types than comparison based sorts
- In practice quick sort and merge sort are usually preferred
- Having said that there are some very neat implementations of radix sort

Comparison of Sort Algorithms

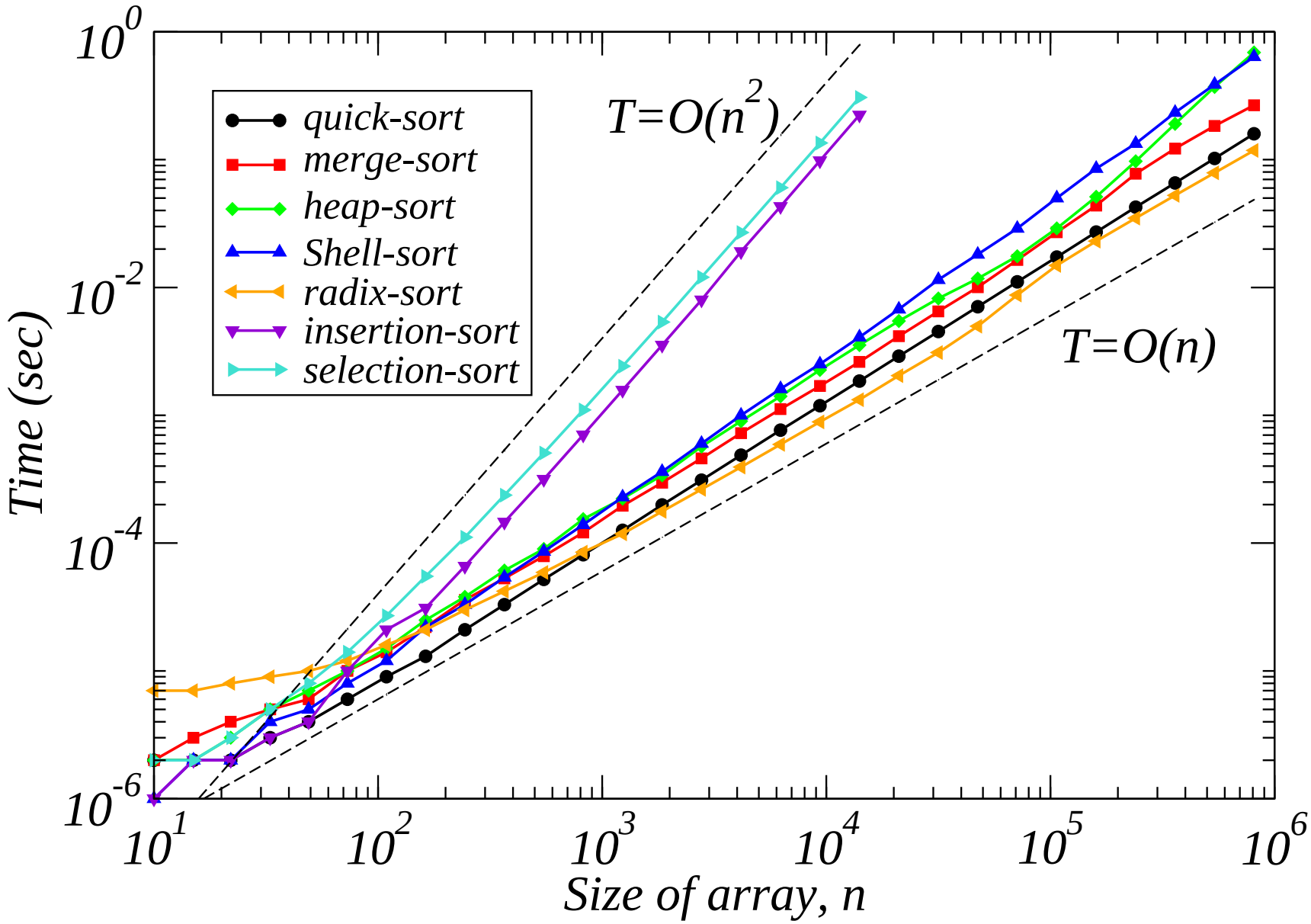

Lessons

- Sort is important—it is one of the commonest high level operations
- Merge sort and quick sort are the most commonly used sort
- There are sorts that have a better time complexity that quicksort
- In practice it is difficult to beat quicksort

Lessons

- Sort is important—it is one of the commonest high level operations
- Merge sort and quick sort are the most commonly used sort
- There are sorts that have a better time complexity that quicksort
- In practice it is difficult to beat quicksort

Lessons

- Sort is important—it is one of the commonest high level operations
- Merge sort and quick sort are the most commonly used sort
- There are sorts that have a better time complexity that quicksort
- In practice it is difficult to beat quicksort

Lessons

- Sort is important—it is one of the commonest high level operations
- Merge sort and quick sort are the most commonly used sort
- There are sorts that have a better time complexity that quicksort
- In practice it is difficult to beat quicksort