# Algorithms and Analysis

## Lesson 12: *Make a hash of it*

*Hash tables, separate chaining, open addressing, linear/quadratic probing, double hashing*



# Outline

1. **Why Hash?**
2. Separate Chaining
3. Open Addressing
   - Quadratic Probing
   - Double Hashing
4. Hash Set and Map

# Content Addressable Memory

- Suppose we have a list of objects which we want to look up according to its contents
- This is often referred to as **associative memory** structures
- A classical example would be a telephone directory
  - We look up a name
  - We want to know the number
- What data structure should we use?



# Lists and Trees

- To find an entry in a normal list takes $\Theta(n)$ operations
- If we had a sorted list we could use "binary search" to reduce this to $\Theta(\log(n))$
  - We will study binary search later
  - Maintaining an ordered list is costly ($\Theta(n)$ insertions)
- We could use a binary search tree
  - Search is $\Theta(\log(n))$
  - Insertion/deletion is $\Theta(\log(n))$

## Thinking Outside the Box

- As with many data structures thinking about the problem differently can lead to much better solutions
- Let us consider the content we want to search on as a **key**
- For telephone numbers the key would be the name of the person we want to phone
- We could get $O(1)$ search, insertion and deletion if we used the key as an index into a big array
- That is the key is a string of, say, 100 characters so can be represented by an 800 digit binary number
- We could look up the key in a table of $2^{800}$ items



## Hashing

- This approach is slightly wasteful of memory
- Almost all memory locations would be empty
- We can save on memory by folding up the table up onto itself

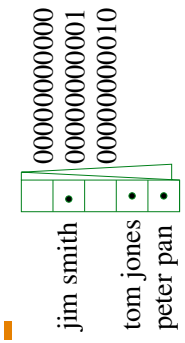




## Hashing Codes

- A **hashing function** `hashCode(x)` takes an object, `x`, and returns a positive integer, the **hash code**
- To turn the hash code into an address take the modulus of the table size

```
int index = abs(hashCode(x) % tableSize);
```

- If `tableSize` $= 2^n$ we can compute this more efficiently using a mask

```
int index = abs(hashCode(x) & (tableSize -1));
```



## Hashing Functions

- Hashing functions take an object and return an integer
- Hashing functions aren't magic
  - They tend to add up integers representing the parts of the object
- We want the integers to be close to random so that similar objects are mapped to different integers
- Sometimes two objects will be mapped to the same address—this is known as a **collision**
- Collision resolution is an important part of hashing

## Hashing Strings

- A strings might be hashed using a function

```
unsigned long long hash(string const& s) {
  unsigned long long results = 12345;

  for (auto ch = s.begin(); ch != s.end(); ++ch) {
    results = 127*results + static_cast<unsigned char>(*ch);
  }
  return results;
}
```

- The numbers 12345 and 127 is to try to prevent clashes—there are lots of alternatives
- What we want is that strings that might be similar receive very different hash codes



## DIY

- The `unordered_set<T, Hash<T> >` allows you to define your own hash function
- By default this is set to `std::hash<T>(T)`
- Not all classes have hash function defined so you will need to do this
- Care is needed to make your hash function produce near random hash codes



## Outline

1. Why Hash?
2. **Separate Chaining**
3. Open Addressing
   - Quadratic Probing
   - Double Hashing
4. Hash Set and Map

## Collision Resolution

- Collisions are inevitable and must be dealt with
- There are two commonly used strategies
  - ⋆ Separate chaining—make a hash table of lists
  - ⋆ Open addressing—find a new position in the hash table
- Collisions add computational cost
- They occur when the hash table becomes full
- If the hash table becomes too full then it may need to be resized

# Resizing a Hash Table

- Resizing a hash table is easy
  - ⋆ Create a new hash table of, say, twice the size
  - ⋆ Iterate through the old hash table adding each element to the new hash table
- Note that you have to recompute all the hash codes
- Resizing a hash table has a modest amortised cost, but can give you a very hiccupy performance
- The size of a hash table is a classic example of a memory-space versus execution time trade off—using bigger (sparser) hash tables speeds up performance



# Separate Chaining

- In separate chaining we build a singly-linked list at each table entry

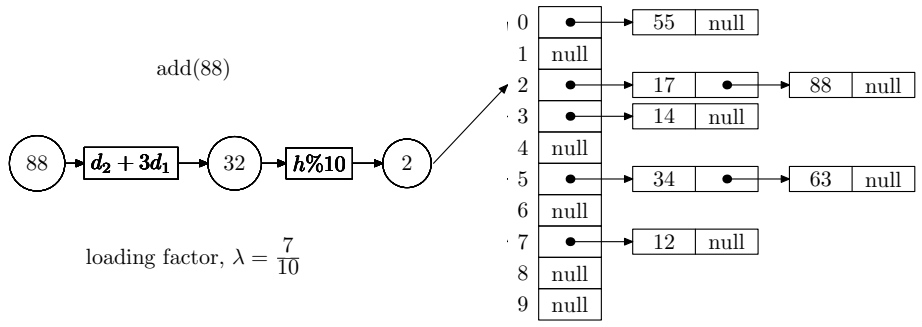




# Search

- To find an entry in a hash table we again use the hash function on a key to find the table entry and then we search the list
- The time complexity depends on where objects are hashed
- If the objects are evenly dispersed in the table, search (and insertion) is $\Omega(1)$
- If the objects are hashed to the same entry in the hash table then search is $O(n)$
- Provided you have a good hashing function and the hash table isn't too full you can expect $\Theta(1)$ average case performance



# Iterating Over a Hash Table

- To iterate over a hash table we
  - ⋆ Iterate through the array
  - ⋆ At each element we iterate through the linked list
- The order of the elements appears random
- This becomes more efficient as the table becomes fuller

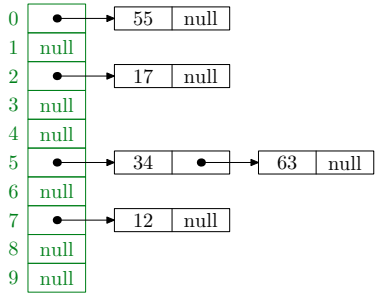


55, 17, 34, 63, 12

# Outline

1. Why Hash?
2. Separate Chaining
3. **Open Addressing**
   - Quadratic Probing
   - Double Hashing
4. Hash Set and Map

# Open Addressing

- In open addressing we have a single table of objects (without a linked-list)
- In the case of a collision a new location in the table is found
- The simplest mechanism is known as **linear probing** where we move the entry to the next available location



# Linear Probing

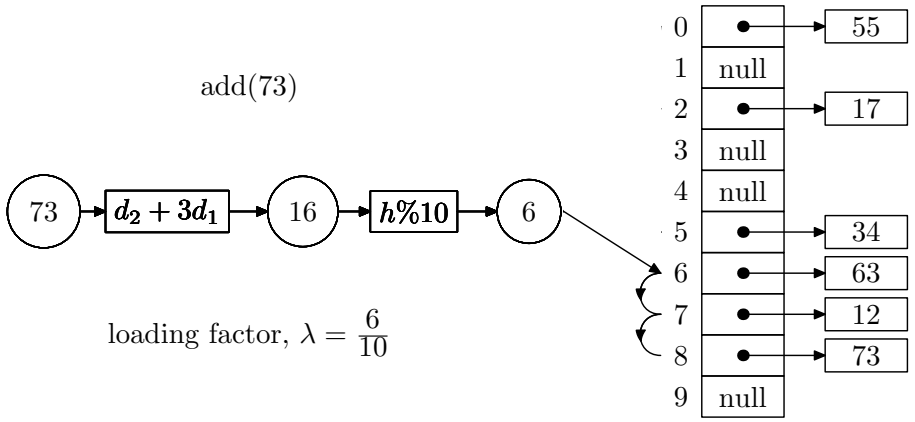




# Linear Probing Pile Up

- The entries will tend to pile up or cluster—this is sometimes referred to as **primary clustering**
- Clusters become worse as the number of entries grow
- Clusters will increase the number of probes needed to find an insert location
- The proportion of full entries in the table is known as the **loading factor**

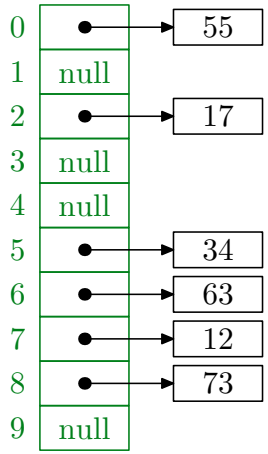

## Reducing Number of Probes

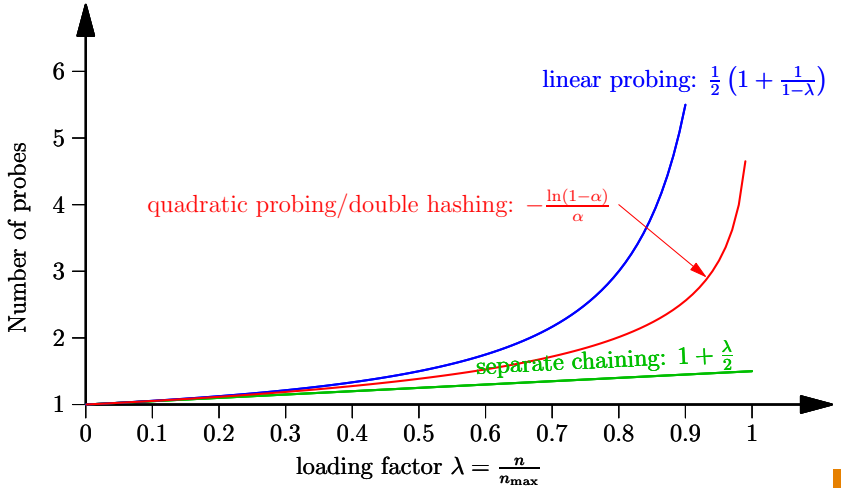


- To avoid clustering we can use **quadratic probing** or **double hashing**



## Quadratic Probing

- In quadratic probing we try the locations $h(x) + d_i$ where $h(x)$ is the original hash code and $d_i = i^2$
- That is we takes steps 1, 4, 9, 16, . . .
- Quadratic probing prevents primary clustering so dramatically decreases the number of probes needed to find a free location when the table is reasonably full
- One problem is that if we are unlucky we might not be able to add an element to the hash table even if the table isn't full
- However, if the size of the table is prime then quadratic probing will always find a free position provided it is not more than half full



## Double Hashing

- An alternative strategy is to known as double hashing where the locations tried are $h(x) + d_i$ where $d_i = i \times h_2(x)$
- $h_2(x)$ is a second hash function that depends on the key
- A good choice is $h_2(x) = R - (x \mod R)$ where $R$ is a prime smaller than the table size
- It is important that $h_2(x)$ is not a divisor of the table size
  - ⋆ Either make sure the table size is prime or
  - ⋆ Set the step size to 1 if $h_2(x)$ is a divisor of the table size



## Problems with Remove

- For all open addressing hash systems removing an entry is a problem
- Remember our strategy to find an input $x$ is
  1. Compute the array index based on the hash code of $x$
  2. If the array location is empty then the search fails
  3. If the array location contains the key the search succeeds
  4. otherwise find a new location using an open addressing strategy and go to 2
- If we remove an entry then find might reach an empty location which was previously full
- This can prevent us finding a true entry

## Linear Probing Example

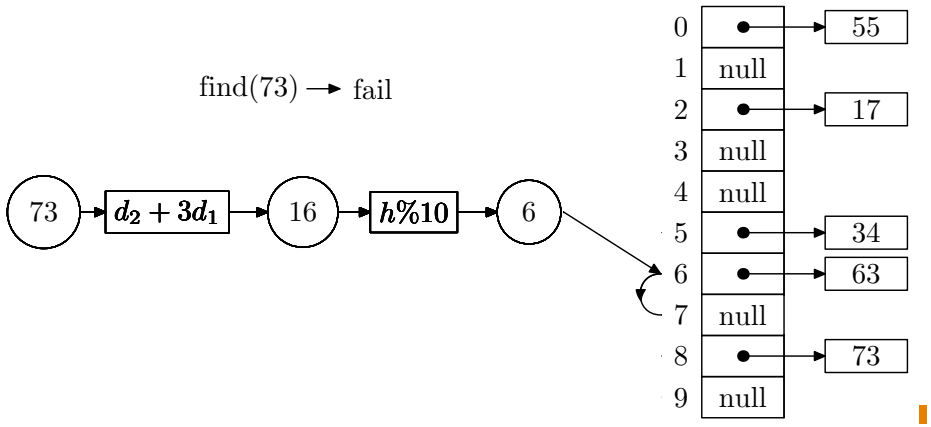




## Lazy Remove

- One easy fix is to mark the deleted table with a special entry
- A find method would consider this entry as full
- An iterator would ignore this entry
- An insert operator could insert a new entry in these special locations



## Lazy Remove in Action

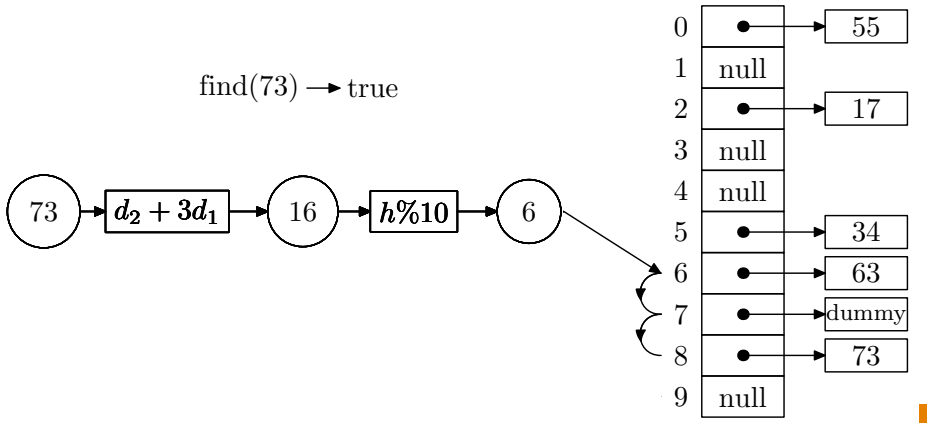




## Outline

1. Why Hash?
2. Separate Chaining
3. Open Addressing
   - Quadratic Probing
   - Double Hashing
4. **Hash Set and Map**

## What Strategy to Use?

- Most libraries including the STL (and the Java Collection class) use separate chaining
- This has the advantage that its performance does not degrade badly as the number of entries increase
- This reduces the need to resize the hash table
- The C++ standard did not include a hash table until C++11 ☹—although very good hash tables existed in C++



## Hash Sets and Maps

- C++ also provides an `unordered_map<Key, V>` class
- It's performance is asymptotically superior to `map`, $O(1)$ rather than $O(\log(n))$
- Hash functions can take time to compute (it is often $O(\log(n))$) so `unordered_sets` might not be faster than `sets`
- One major difference is that the iterator for `sets` return the elements in order, `undordered_set`'s iterator doesn't



## Applications

- Hash tables are used everywhere
- E.g. most databases use hash tables to speed up search
- In many document applications hash tables will be being generated in the background
- Content addressability is ubiquitous to many application where hash tables are used as standard



## Lessons

- Hash tables are one of the most useful tools you have available
- They aren't particularly difficult to understand, but you need to know about
  - ⋆ hashing functions
  - ⋆ collision strategies
  - ⋆ performance (i.e. when they work)