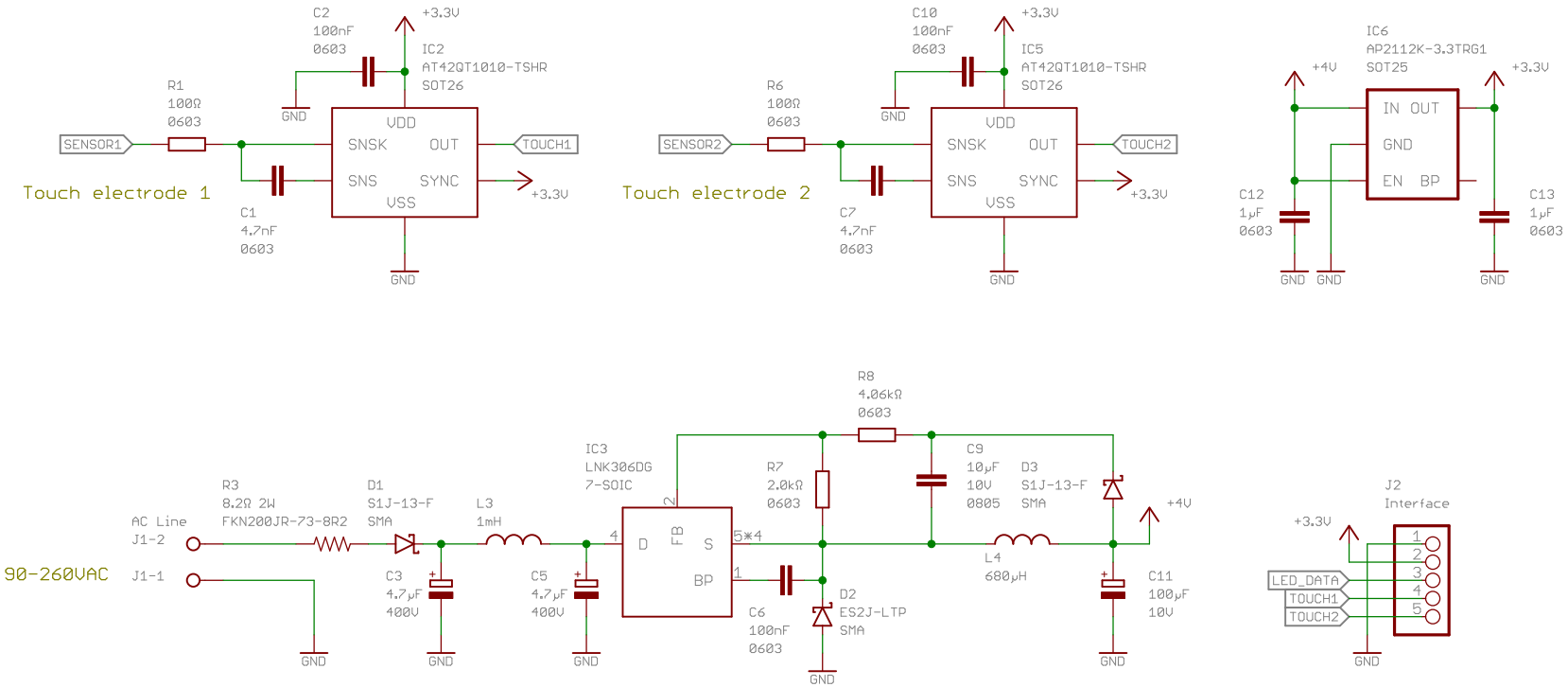

Networked Wall Switch

Copyright 2017 Luke Weston

Open Hardware Licensed under CERN OHL v.1.2 :

http://ohwr.org/cernohl

WallSwitch	
10/04/17 3:01 AM	
Sheet: 1/1	