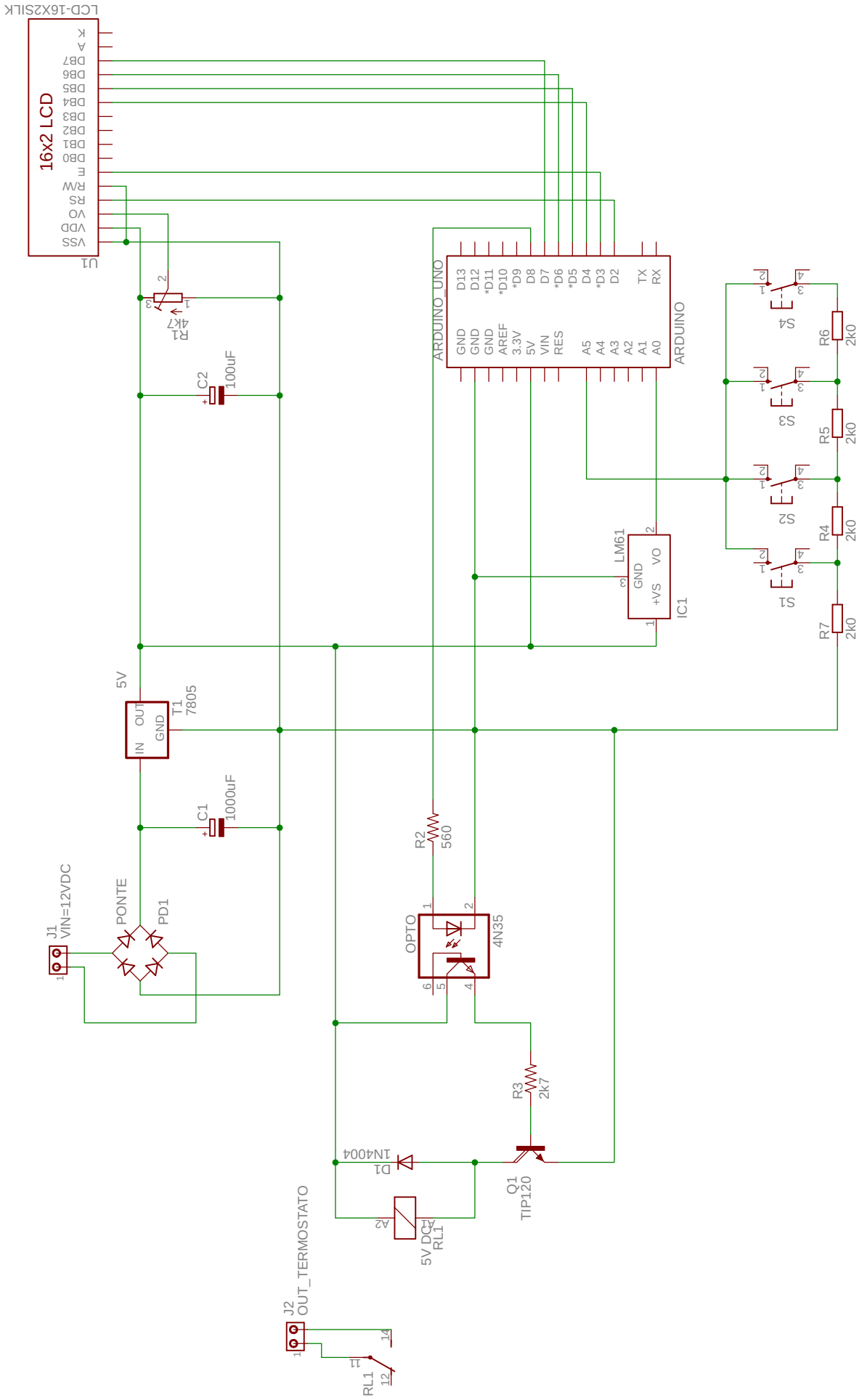
LCD-16X2SILK
16x2 LCD
U1
VSS
VDD
VO
RS
RW
E
DB0
DB1
DB2
DB3
DB4
DB5
DB6
DB7
A
K
R1
4K7
C2
100uF
ARDUINO_UNO
ARDUINO
GND
GND
GND
AREF
3.3V
5V
VIN
RES
A5
A4
A3
A2
A1
A0
D13
D12
*D11
*D10
*D9
D8
D7
*D6
*D5
D4
*D3
D2
TX
RX
S4
S3
S2
S1
R6
R5
R4
R7
2k0
LM61
GND
VO
+VS
IC1
5V
T1
7805
IN
OUT
GND
C1
1000uF
J1
VIN=12VDC
PONTE
PD1
R2
560
OPTO
4N35
R3
2k7
Q1
TIP120
D1
1N4004
5V DC
RL1
A1
A2
J2
OUT_TERMOSTATO
RL1
11
12
14