CLASS DIAGRAM

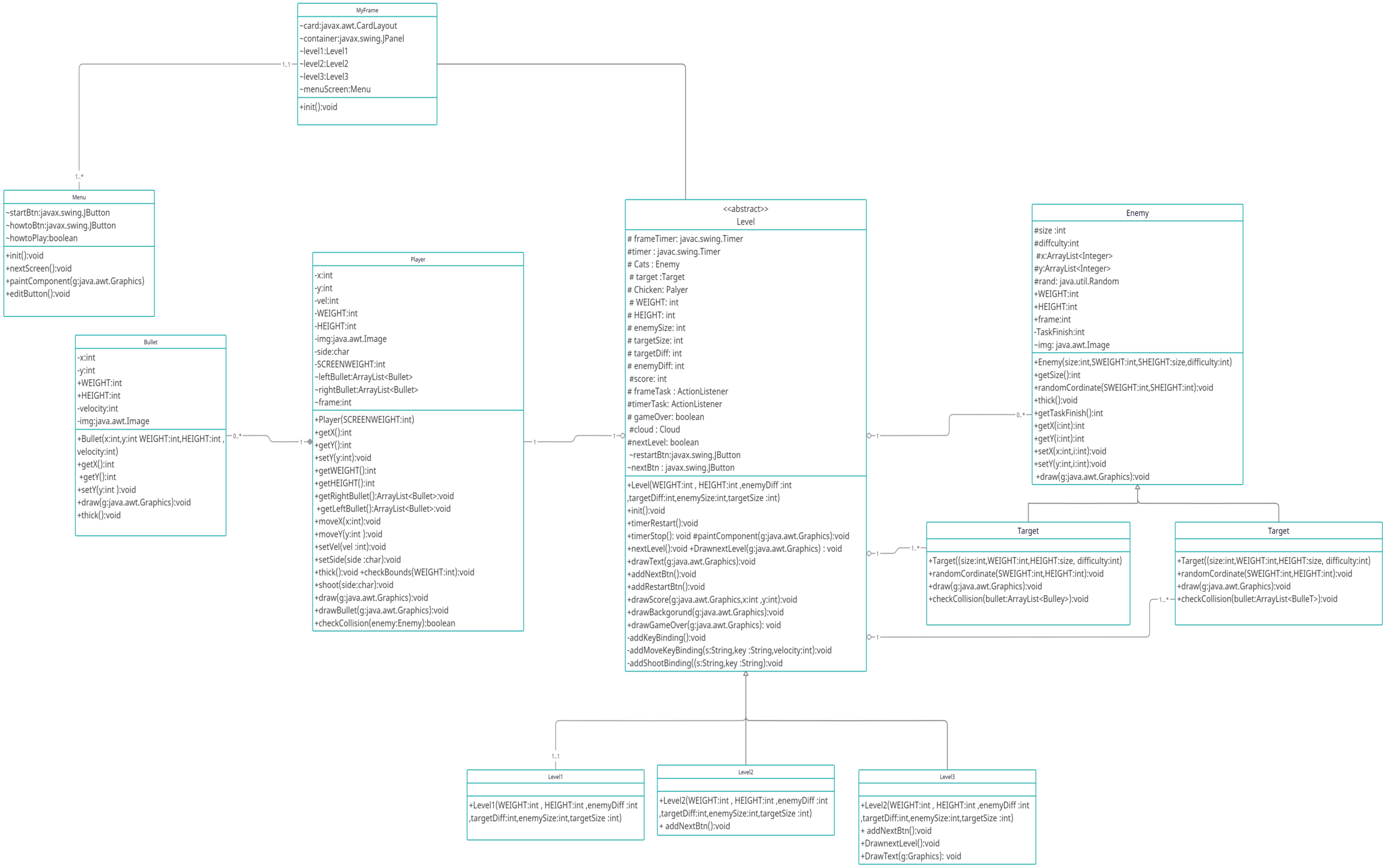
MyFrame
~card:javax.awt.CardLayout
~container:javax.swing.JPanel
~level1:Level1
~level2:Level2
~level3:Level3
~menuScreen:Menu
+init():void
1..1
1..*
Menu
~startBtn:javax.swing.JButton
~howtoBtn:javax.swing.JButton
~howtoPlay:boolean
+init():void
+nextScreen():void
+paintComponent(g:java.awt.Graphics)
+editButton():void
Bullet
-x:int
-y:int
+WEIGHT:int
+HEIGHT:int
-velocity:int
-img:java.awt.Image
+Bullet(x:int,y:int WEIGHT:int,HEIGHT:int ,
velocity:int)
+getX():int
+getY():int
+setY(y:int):void
+draw(g:java.awt.Graphics):void
+thick():void
0..*
1
Player
-x:int
-y:int
-vel:int
-WEIGHT:int
-HEIGHT:int
-img:java.awt.Image
-side:char
-SCREENWEIGHT:int
~leftBullet:ArrayList<Bullet>
~rightBullet:ArrayList<Bullet>
~frame:int
+Player(SCREENWEIGHT:int)
+getX():int
+getY():int
+setY(y:int):void
+getWEIGHT():int
+getHEIGHT():int
+getRightBullet():ArrayList<Bullet>:void
+getLeftBullet():ArrayList<Bullet>:void
+moveX(x:int):void
+moveY(y:int):void
+setVel(vel :int):void
+setSide(side :char):void
+thick():void +checkBounds(WEIGHT:int):void
+shoot(side:char):void
+draw(g:java.awt.Graphics):void
+drawBullet(g:java.awt.Graphics):void
+checkCollision(enemy:Enemy):boolean
1
1
<<abstract>>
Level
# frameTimer: javac.swing.Timer
#timer : javac.swing.Timer
# Cats : Enemy
# target :Target
# Chicken: Palyer
# WEIGHT: int
# HEIGHT: int
# enemySize: int
# targetSize: int
# targetDiff: int
# enemyDiff: int
#score: int
# frameTask : ActionListener
#timerTask: ActionListener
# gameOver: boolean
#cloud : Cloud
#nextLevel: boolean
~restartBtn:javax.swing.JButton
~nextBtn : javax.swing.JButton
+Level(WEIGHT:int , HEIGHT:int ,enemyDiff :int
,targetDiff:int,enemySize:int,targetSize :int)
+init():void
+timerRestart():void
+timerStop(): void #paintComponent(g:java.awt.Graphics):void
+nextLevel():void +DrawnextLevel(g:java.awt.Graphics) : void
+drawText(g:java.awt.Graphics):void
+addNextBtn():void
+addRestartBtn():void
+drawScore(g:java.awt.Graphics,x:int ,y:int):void
+drawBackgorund(g:java.awt.Graphics):void
+drawGameOver(g:java.awt.Graphics): void
-addKeyBinding():void
-addMoveKeyBinding(s:String,key :String,velocity:int):void
-addShootBinding((s:String,key :String):void
1
0..*
Enemy
#size :int
#diffculty:int
#x:ArrayList<Integer>
#y:ArrayList<Integer>
#rand: java.util.Random
+WEIGHT:int
+HEIGHT:int
+frame:int
-TaskFinish:int
~img: java.awt.Image
+Enemy(size:int,SWEIGHT:int,SHEIGHT:size,difficulty:int)
+getSize():int
+randomCordinate(SWEIGHT:int,SHEIGHT:int):void
+thick():void
+getTaskFinish():int
+getX(i:int):int
+getY(i:int):int
+setX(x:int,i:int):void
+setY(y:int,i:int):void
+draw(g:java.awt.Graphics):void
1
1..*
Target
+Target((size:int,WEIGHT:int,HEIGHT:size, difficulty:int)
+randomCordinate(SWEIGHT:int,HEIGHT:int):void
+draw(g:java.awt.Graphics):void
+checkCollision(bullet:ArrayList<Bulley>):void
1
1...*
Target
+Target((size:int,WEIGHT:int,HEIGHT:size, difficulty:int)
+randomCordinate(SWEIGHT:int,HEIGHT:int):void
+draw(g:java.awt.Graphics):void
+checkCollision(bullet:ArrayList<BulleT>):void
1..1
Level1
+Level1(WEIGHT:int , HEIGHT:int ,enemyDiff :int
,targetDiff:int,enemySize:int,targetSize :int)
Level2
+Level2(WEIGHT:int , HEIGHT:int ,enemyDiff :int
,targetDiff:int,enemySize:int,targetSize :int)
+ addNextBtn():void
Level3
+Level2(WEIGHT:int , HEIGHT:int ,enemyDiff :int
,targetDiff:int,enemySize:int,targetSize :int)
+ addNextBtn():void
+DrawnextLevel():void
+DrawText(g:Graphics): void

USE CASE DIAGRAM

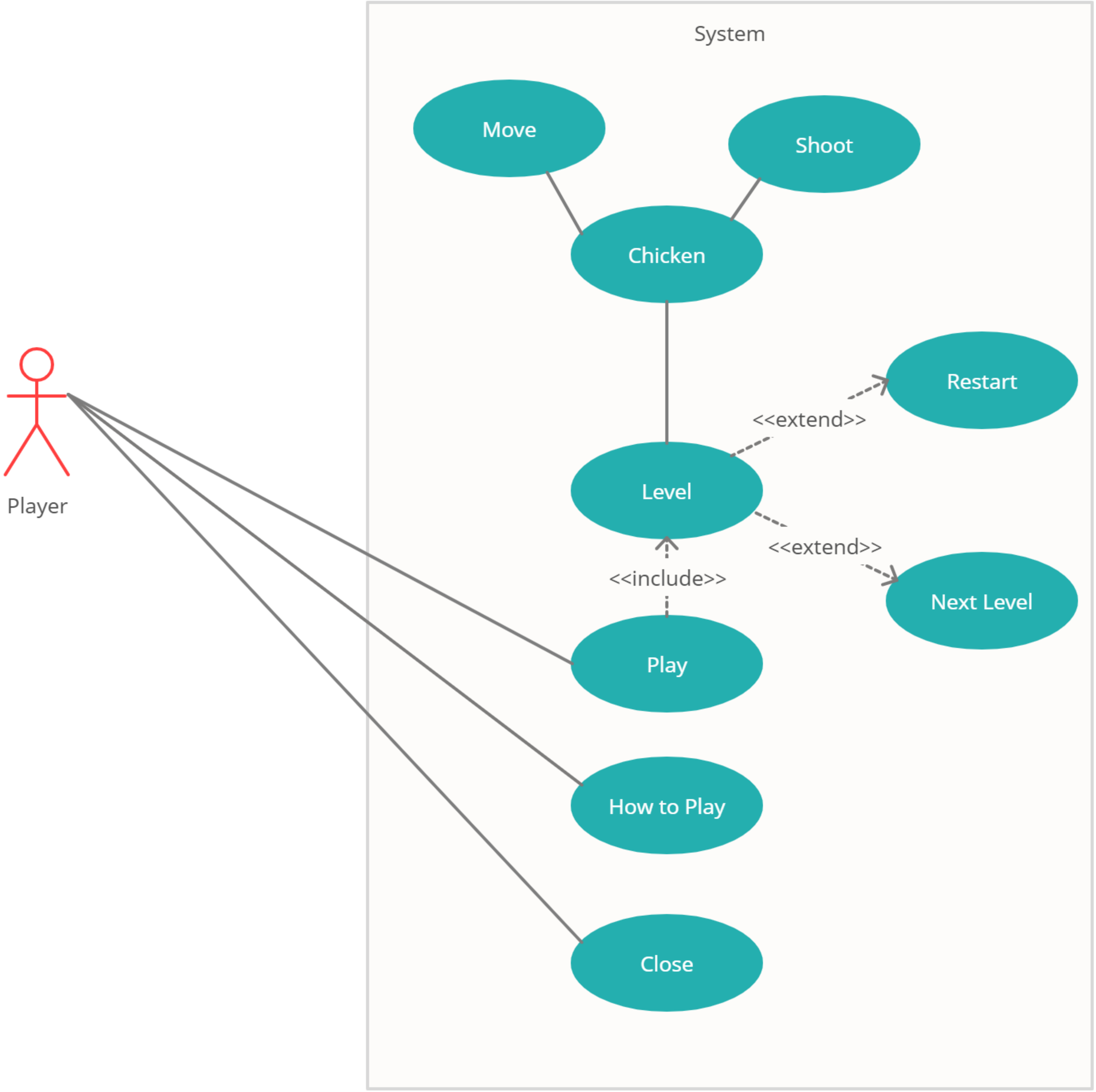
System
Move
Shoot
Chicken
Restart
<<extend>>
Player
Level
<<extend>>
Next Level
<<include>>
Play
How to Play
Close

SEQUENCE DIAGRAM

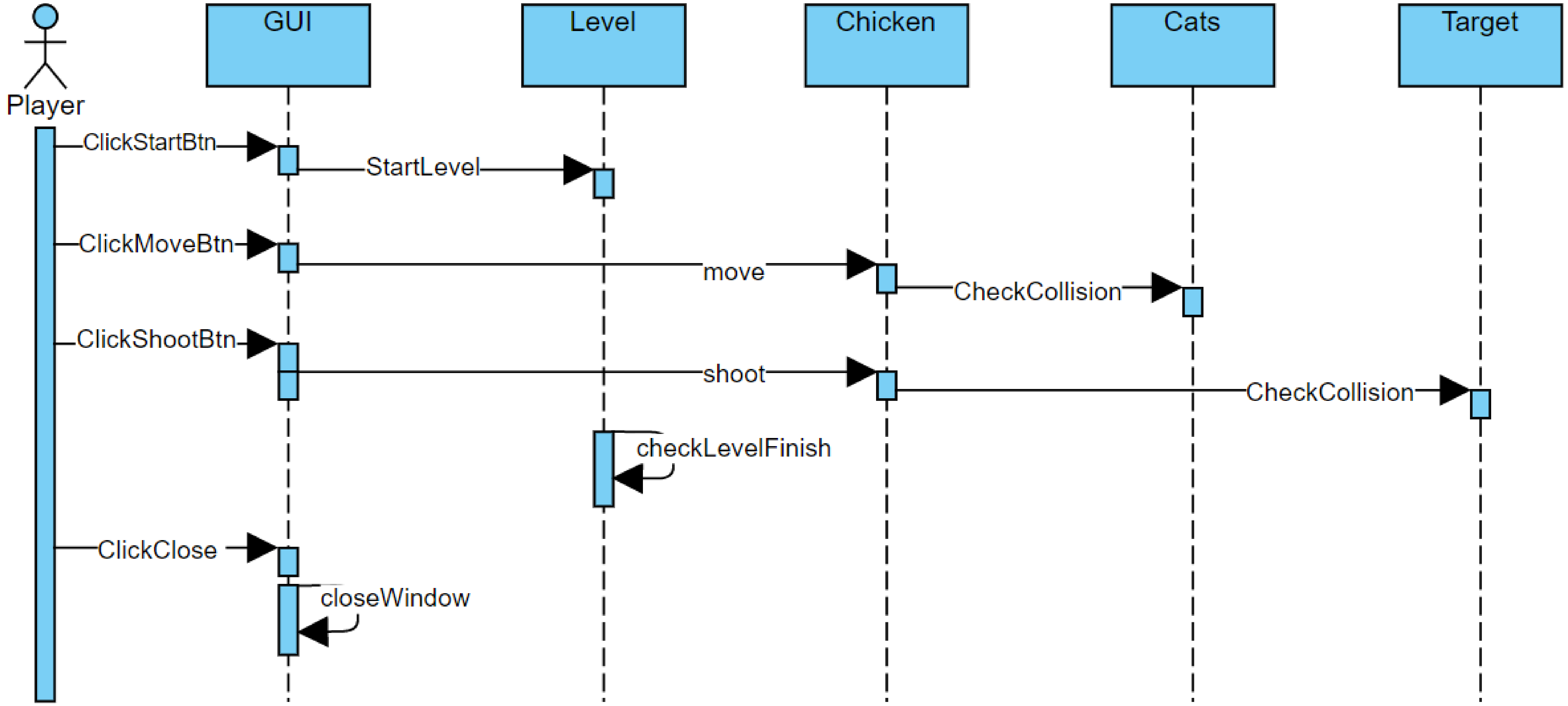
Player
GUI
Level
Chicken
Cats
Target
ClickStartBtn
StartLevel
ClickMoveBtn
move
CheckCollision
ClickShootBtn
shoot
CheckCollision
checkLevelFinish
ClickClose
closeWindow

ACTIVITY DIAGRAM

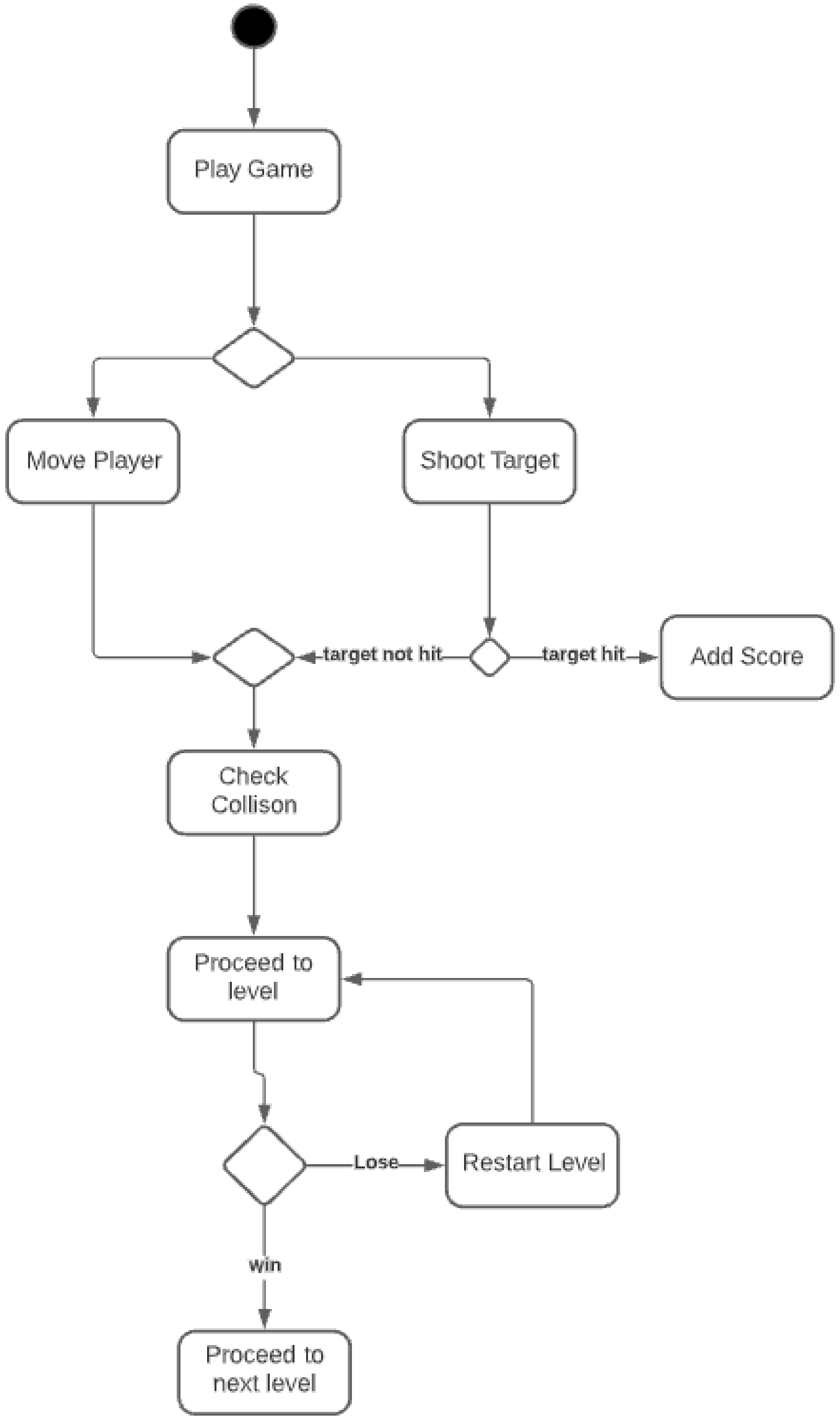
Play Game
Move Player
Shoot Target
target not hit
target hit
Add Score
Check Collison
Proceed to level
Lose
Restart Level
win
Proceed to next level