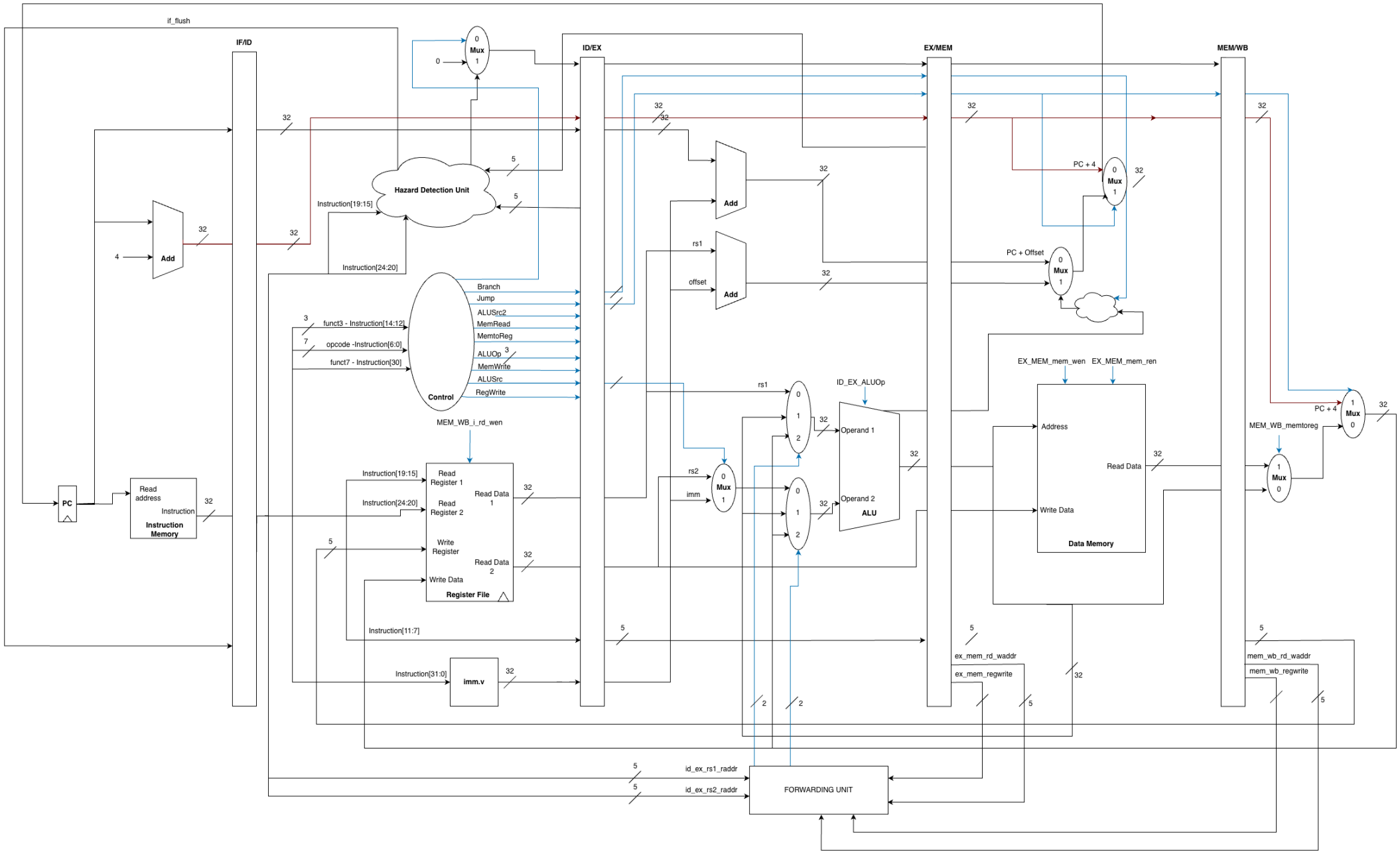
if_flush
IF/ID
ID/EX
EX/MEM
MEM/WB
Mux
Add
Hazard Detection Unit
Instruction[19:15]
Instruction[24:20]
Control
Branch
Jump
ALUSrc2
MemRead
MemtoReg
ALUOp
MemWrite
ALUSrc
RegWrite
funct3 - Instruction[14:12]
opcode -Instruction[6:0]
funct7 - Instruction[30]
MEM_WB_i_rd_wen
PC
Read address
Instruction
Instruction Memory
Read Register 1
Read Register 2
Write Register
Write Data
Read Data 1
Read Data 2
Register File
Instruction[11:7]
Instruction[31:0]
imm.v
rs1
offset
rs2
imm
ID_EX_ALUOp
Operand 1
Operand 2
ALU
PC + 4
PC + Offset
EX_MEM_mem_wen
EX_MEM_mem_ren
Address
Read Data
Write Data
Data Memory
MEM_WB_memtoreg
ex_mem_rd_waddr
ex_mem_regwrite
mem_wb_rd_waddr
mem_wb_regwrite
id_ex_rs1_raddr
id_ex_rs2_raddr
FORWARDING UNIT