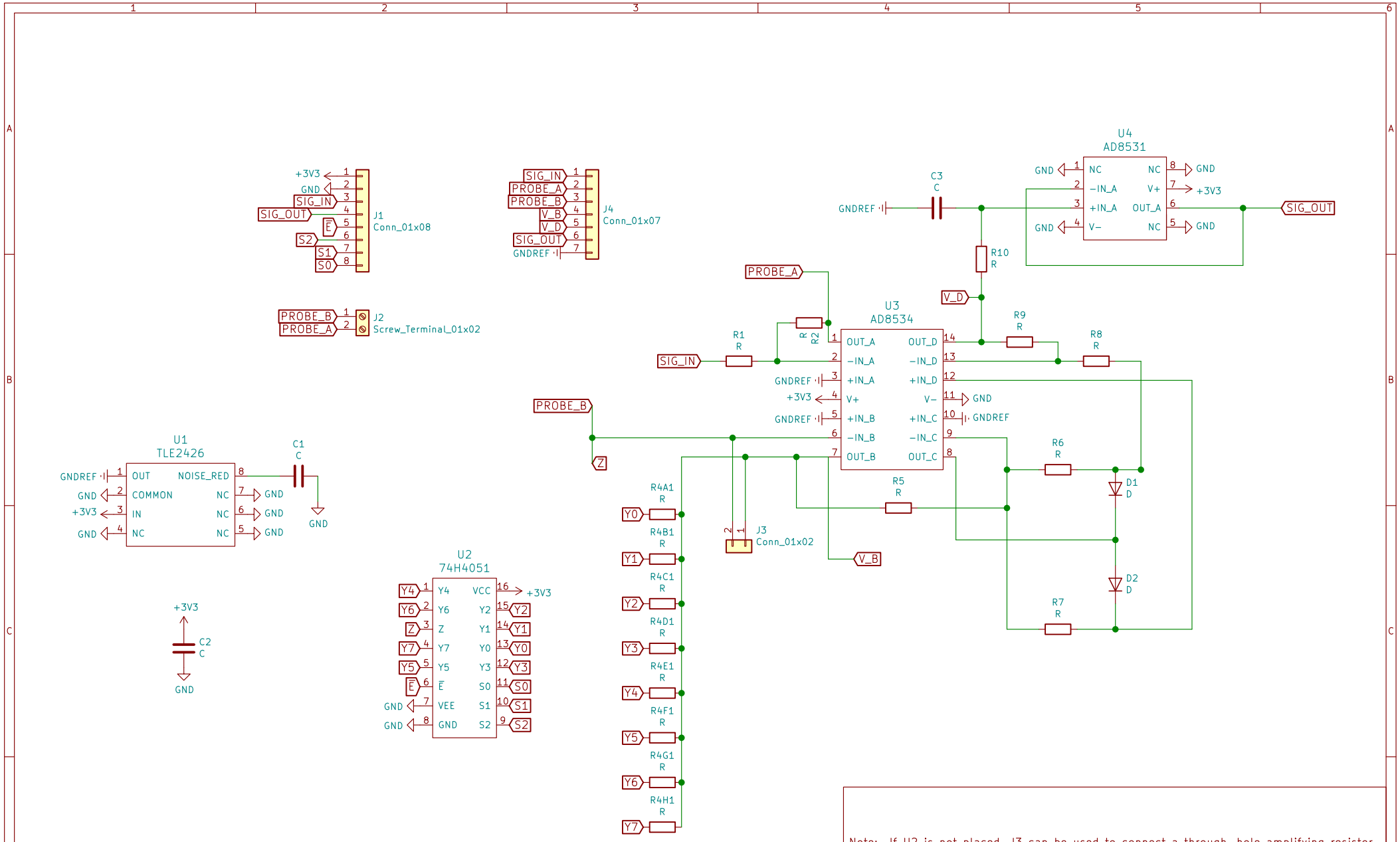

Note: If U2 is not placed, J3 can be used to connect a through-hole amplifying resistor

edgecollective

Sheet: /

File: conductive.sch

Title: Conductivity-board

Size: A4	Date:	**Rev: 0.1**
KiCad E.D.A. kicad no-vcs-found-1fe91e659ubuntu17.04.1		Id: 1/1