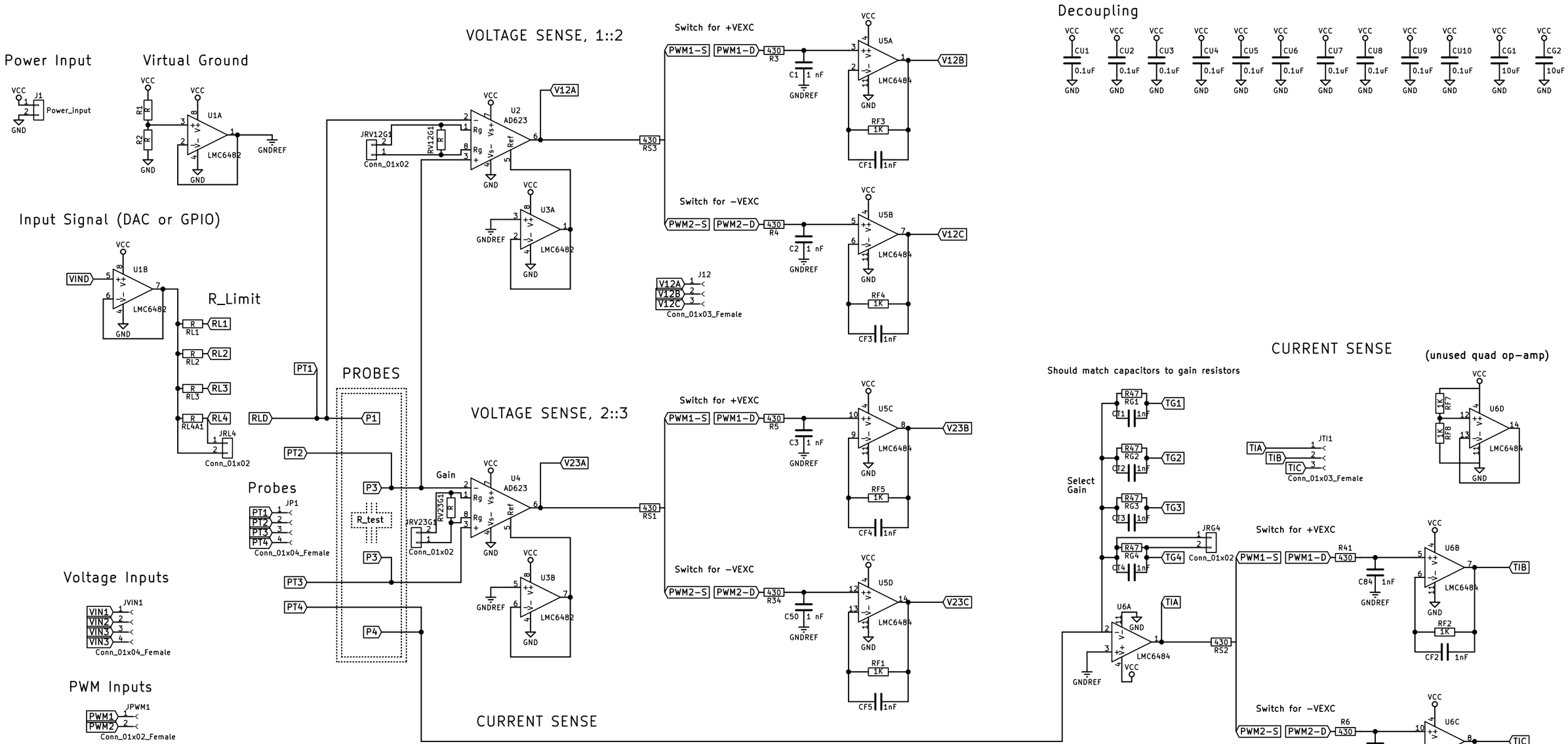

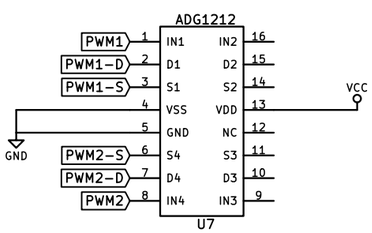

Switch: PWM

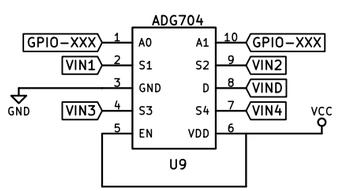

MUX: VIN_SOURCE

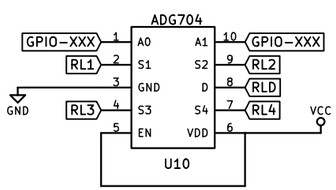

MUX: R_Limiting

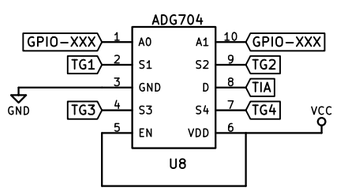

MUX: TRANSAMP−GAIN