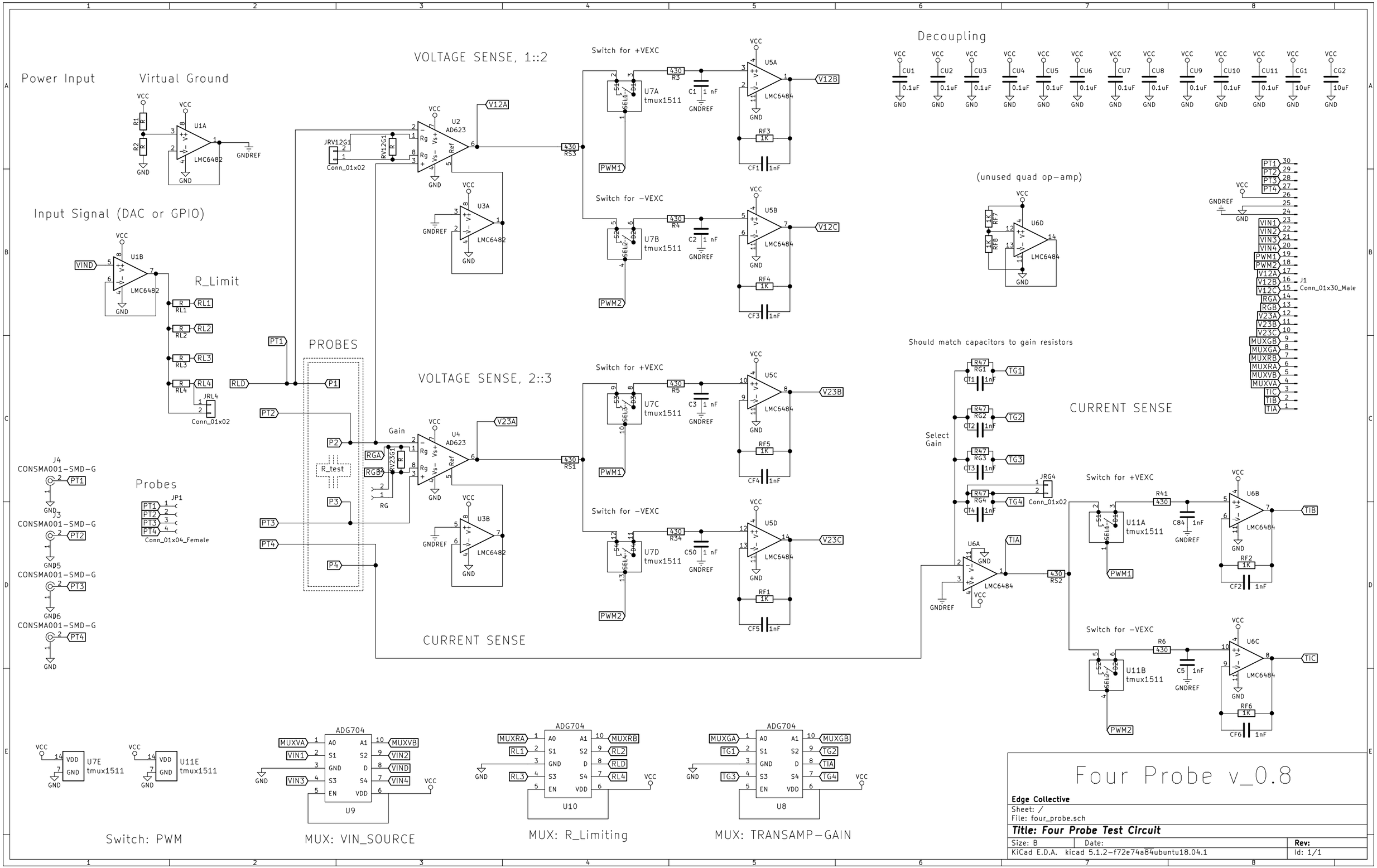
Power Input
Virtual Ground
Input Signal (DAC or GPIO)
R_Limit
VOLTAGE SENSE, 1::2
VOLTAGE SENSE, 2::3
PROBES
Probes
Decoupling
(unused quad op-amp)
Should match capacitors to gain resistors
CURRENT SENSE
Switch for +VEXC
Switch for -VEXC
Select Gain
Switch: PWM
MUX: VIN_SOURCE
MUX: R_Limiting
MUX: TRANSAMP-GAIN
Four Probe v_0.8
Edge Collective
Sheet: /
File: four_probe.sch
Title: Four Probe Test Circuit
Size: B
Date:
Rev:
KiCad E.D.A. kicad 5.1.2-f72e74a84ubuntu18.04.1
Id: 1/1